ISLAMIC REPUBLIC OF PAKISTAN
GOVERNMENT OF PUNJAB
LOCAL GOVERNMENT & COMMUNITY DEVELOPMENT DEPARTMENT

LOAN 3562-PAK:
PUNJAB INTERMEDIATE CITIES IMPROVEMENT INVESTMENT PROGRAM (PICIIP)

BIDDING DOCUMENT

NCB-Works/PICIIP-27:

Civil Works for Parking Sheds at Sahiwal and Sialkot including Construction of Boundary Wall and Gate, Surveillance and Security System, Guard / Driver and Equipment, Office Building and Allied Works at Sahiwal and Sialkot

-Single-Stage: Two-Envelope Bidding Procedure-

PROGRAM MANAGEMENT UNIT
Punjab Intermediate Cities Improvement Investment Program
Local Government & Community Development Department, Government of Pakistan

40 B-1, Gulberg 3, MM Alam Road, Lahore Pakistan
Email address: pmu.piciip@punjab.gov.pk
Telephone: +92 42 99268484
Fax Number: +92 42 99268483

Procurement of Works

BIDDING DOCUMENT
for
Procurement
of

NCB-Works/PICIIP-27

Civil Works for Parking Sheds at Sahiwal and Sialkot including Construction of Boundary Wall and Gate, Surveillance and Security System, Guard / Driver and Equipment, Office Building and Allied Works at Sahiwal and Sialkot

Issued on:	***25 January 2022***
Invitation for Bids No.:	**NCB-Works/PICIIP-27**
NCB No.:	**PICIIP-27-Parking Sheds**
Employer:	**Program Management Unit (PMU)** **Punjab Intermediate Cities Improvement Investment Program (PICIIP)** **Local Government & Community Department Punjab, Lahore**
Country:	**Pakistan**

Preface

This Bidding Document for the Procurement of Works has been prepared by ***Program Management Unit (PMU), Punjab Intermediate Cities Improvement Investment Program (PICIIP), Local Government & Community Development Department, Punjab Pakistan*** and is based on the Standard Bidding Document for the Procurement of Works – Small (*SBD Works-Small*) issued by the Asian Development Bank dated ***December 2016***.

ADB's *SBD Works* has the structure and the provisions of the Master Procurement Document entitled "Bidding Documents for the Procurement of Works", prepared by multilateral development banks and other public international financial institutions, except where ADB-specific considerations have required a change.

Table of Contents - Summary Description

PART I BIDDING PROCEDURES

Section 1 - Instructions to Bidders (ITB)---------- 1-1
This Section specifies the procedures Bidders should follow when preparing and submitting their Bids. Information is also provided on the submission, opening, evaluation of bids, and on the award of contract.

Section 2 - Bid Data Sheet (BDS) ---------- 2-1
This Section consists of provisions that are specific to each procurement and supplement the information or requirements included in Section 1 - Instructions to Bidders.

Section 3 - Evaluation and Qualification Criteria (EQC) ---------- 3-1
This Section contains the criteria to determine the lowest evaluated bid and the qualifications of the Bidder to perform the contract.

Section 4 - Bidding Forms (BDF) ---------- 4-1
This Section contains the forms which are to be completed by the Bidder and submitted as part of its Bid.

Section 5 - Eligible Countries (ELC) ---------- 5-1
This Section contains the list of eligible countries.

PART II REQUIREMENTS

Section 6 - Employer's Requirements (ERQ) ---------- 6-1
This Section contains the Specification, Drawings, Supplementary Information that describe the Works to be procured, Personnel Requirements, and Equipment Requirements.

PART III CONDITIONS OF CONTRACT AND CONTRACT FORMS

Section 7 - General Conditions of Contract (GCC) ---------- 7-1
This Section contains the general clauses to be applied in all contracts. These Conditions are subject to the variations and additions set out in Section 8 (Particular Conditions of Contract).

Section 8 - Particular Conditions of Contract (PCC) ---------- 8-1
This Section contains provisions which are specific to each contract and which modify or supplement the GCC. Whenever there is a conflict, the provisions herein shall prevail over those in the GCC.

Section 9 - Contract Forms (COF)---------- 9-1
This Section contains forms, which, once completed, will form part of the Contract. The forms for Performance Security and Advance Payment Security, when required, shall only be completed by the successful Bidder after contract award.

Section 1 - Instructions to Bidders

Table of Clauses

A. General 1-3

1. Scope of Bid 1-3
2. Source of Funds 1-3
3. Fraud and Corruption 1-3
4. Eligible Bidders 1-5
5. Eligible Materials, Equipment, and Services 1-6

B. Contents of Bidding Document 1-6

6. Sections of Bidding Document 1-6
7. Clarification of Bidding Document, Site Visit, Pre-Bid Meeting 1-7
8. Amendment of Bidding Document 1-8

C. Preparation of Bids 1-8

9. Cost of Bidding 1-8
10. Language of Bid 1-8
11. Documents Comprising the Bid 1-8
12. Letters of Bid and Schedules 1-9
13. Alternative Bids 1-9
14. Bid Prices and Discounts 1-10
15. Currencies of Bid and Payment 1-10
16. Documents Comprising the Technical Proposal 1-11
17. Documents Establishing the Qualifications of the Bidder 1-11
18. Period of Validity of Bids 1-11
19. Bid Security/Bid-Securing Declaration 1-11
20. Format and Signing of Bid 1-12

D. Submission and Opening of Bids 1-13

21. Sealing and Marking of Bids 1-13
22. Deadline for Submission of Bids 1-14
23. Late Bids 1-14
24. Withdrawal, Substitution, and Modification of Bids 1-14
25. Bid Opening 1-14

E. Evaluation and Comparison of Bids 1-16

26. Confidentiality 1-16
27. Clarification of Bids 1-16
28. Deviations, Reservations, and Omissions 1-17
29. Examination of Technical Bids 1-17
30. Responsiveness of Technical Bid 1-17

31. Nonmaterial Nonconformities 1-18
32. Qualification of the Bidder 1-18
33. Correction of Arithmetical Errors 1-18
34. Conversion to Single Currency 1-19
35. Margin of Preference 1-19
36. Evaluation of Price Bids 1-19
37. Comparison of Bids 1-20
38. Employer's Right to Accept Any Bid, and to Reject Any or All Bids 1-20

F. Award of Contract 1-20

39. Award Criteria 1-20
40. Notification of Award 1-20
41. Signing of Contract 1-20
42. Performance Security 1-21

Section 1 - Instructions to Bidders

A. General

1. Scope of Bid	1.1	In connection with the Invitation for Bids (IFB) indicated in the Bid Data Sheet (BDS), the Employer, as indicated in the BDS, issues this Bidding Document for the procurement of the Works as specified in Section 6 (Employer's Requirements). The name, identification, and number of contracts of this bidding are provided in the BDS.
	1.2	Throughout this Bidding Document, (a) the term "in writing" means communicated in written form and delivered against receipt; (b) except where the context requires otherwise, words indicating the singular also include the plural and words indicating the plural also include the singular; and (c) "day" means calendar day.
2. Source of Funds	2.1	The Borrower or Recipient (hereinafter called "Borrower") indicated in the BDS has applied for or received financing (hereinafter called "funds") from the Asian Development Bank (hereinafter called "ADB") toward the cost of the project named in the BDS. The Borrower intends to apply a portion of the funds to eligible payments under the contract(s) for which this Bidding Document is issued.
	2.2	Payments by ADB will be made only at the request of the Borrower and upon approval by ADB in accordance with the terms and conditions of the Financing Agreement between the Borrower and ADB (hereinafter called "Financing Agreement"), and will be subject in all respects to the terms and conditions of that Financing Agreement. No party other than the Borrower shall derive any rights from the Financing Agreement or have any claim to the funds.
3. Fraud and Corruption	3.1	ADB's Anticorruption Policy requires Borrowers (including beneficiaries of ADB-financed activity), as well as Bidders, Suppliers, and Contractors under ADB-financed contracts, observe the highest standard of ethics during the procurement and execution of such contracts. In pursuance of this policy, ADB (a) defines, for the purposes of this provision, the terms set forth below as follows: (i) "corrupt practice" means the offering, giving, receiving, or soliciting, directly or indirectly, anything of value to influence improperly the actions of another party; (ii) "fraudulent practice" means any act or omission, including a misrepresentation, that knowingly or recklessly misleads, or attempts to mislead, a party to obtain a financial or other benefit or to avoid an obligation; (iii) "coercive practice" means impairing or harming, or threatening to impair or harm, directly or indirectly, any party or the property of the party to influence improperly the

actions of a party;

(iv) "collusive practice" means an arrangement between two or more parties designed to achieve an improper purpose, including influencing improperly the actions of another party;

(v) "obstructive practice" means (a) deliberately destroying, falsifying, altering, or concealing of evidence material to an ADB investigation; (b) making false statements to investigators in order to materially impede an ADB investigation; (c) failing to comply with requests to provide information, documents, or records in connection with an Office of Anticorruption and Integrity (OAI) investigation; (d) threatening, harassing, or intimidating any party to prevent it from disclosing its knowledge of matters relevant to the investigation or from pursuing the investigation; or (e) materially impeding ADB's contractual rights of audit or access to information; and

(vi) "integrity violation" is any act which violates ADB's Anticorruption Policy, including (i) to (v) above and the following: abuse, conflict of interest, violations of ADB sanctions, retaliation against whistleblowers or witnesses, and other violations of ADB's Anticorruption Policy, including failure to adhere to the highest ethical standard.

(b) will reject a proposal for award if it determines that the Bidder recommended for award has, directly or through an agent, engaged in corrupt, fraudulent, collusive, coercive, or obstructive practices or other integrity violations in competing for the Contract;

(c) will cancel the portion of the financing allocated to a contract if it determines at any time that representatives of the Borrower or of a beneficiary of ADB financing engaged in corrupt, fraudulent, collusive, coercive, or obstructive practices or other integrity violations during the procurement or the execution of that contract, without the Borrower having taken timely and appropriate action satisfactory to ADB to remedy the situation;

(d) will impose remedial actions on a firm or an individual, at any time, in accordance with ADB's Anticorruption Policy and Integrity Principles and Guidelines (both as amended from time to time), including declaring ineligible, either indefinitely or for a stated period of time, to participate[1] in ADB-financed, -administered, or -supported activities or to benefit from an ADB-financed, -administered, or -supported contract, financially or otherwise, if it at any time determines that the firm or individual has, directly or through an agent, engaged in corrupt, fraudulent, collusive, coercive, or obstructive practices or other integrity violations; and

[1] Whether as a Contractor, Nominated Subcontractor, Consultant, Manufacturer or Supplier, or Service Provider; or in any other capacity (different names are used depending on the particular Bidding Document). A Nominated Subcontractor is one that either has been (i) included by the Bidder in its prequalification application or bid because it brings specific and critical experience and know-how that are accounted for in the evaluation of the bidder's prequalification application or the bid; or (ii) appointed by the Employer.

	(e) will have the right to require that a provision be included in bidding documents and in contracts financed by ADB, requiring Bidders, suppliers, and contractors to permit ADB or its representative to inspect their accounts and records and other documents relating to the bid submission and contract performance and to have them audited by auditors appointed by ADB.
	3.2 Furthermore, Bidders shall be aware of the provisions of GCC 28.3 and 73.2 (i).
4. Eligible Bidders	4.1 A Bidder may be a natural person, private entity, or government-owned enterprise subject to ITB 4.5 – or any combination of them with a formal intent to enter into an agreement or under an existing agreement in the form of a Joint Venture. In the case of a Joint Venture: (a) all partners shall be jointly and severally liable; and (b) the Joint Venture shall nominate a Representative who shall have the authority to conduct all business for and on behalf of any and all the parties of the Joint Venture during the bidding process and, in the event the Joint Venture is awarded the Contract, during contract execution.
	4.2 A Bidder, and all parties constituting the Bidder, shall have the nationality of an eligible country, in accordance with Section 5 (Eligible Countries). A Bidder shall be deemed to have the nationality of a country if the Bidder is a citizen or is constituted, incorporated, or registered, and operates in conformity with the provisions of the laws of that country. This criterion shall also apply to the determination of the nationality of proposed subcontractors or suppliers for any part of the Contract including related services.
	4.3 A Bidder shall not have a conflict of interest. All Bidders found to have a conflict of interest shall be disqualified. A Bidder may be considered to be in a conflict of interest with one or more parties in this bidding process if any of, including but not limited to, the following apply: (a) they have controlling shareholders in common; or (b) they receive or have received any direct or indirect subsidy from any of them; or (c) they have the same legal representative for purposes of this bid; or (d) they have a relationship with each other, directly or through common third parties, that puts them in a position to have access to material information about or improperly influence the Bid of another Bidder, or influence the decisions of the Employer regarding this bidding process; or (e) a Bidder participates in more than one bid in this bidding process, either individually or as a partner in a joint venture, except for alternative offers permitted under ITB 13 of the Bidding Document. This will result in the disqualification of all Bids in which it is involved. However, subject to any finding of a conflict of interest in terms of ITB 4.3 (a) - (d) above, this does not limit the participation of a Bidder as a Subcontractor in another Bid or of a firm as a

		Subcontractor in more than one Bid; or (f) a Bidder or any affiliated entity, participated as a Consultant in the preparation of the design or technical specifications of the works that are the subject of the Bid; or (g) a Bidder was affiliated with a firm or entity that has been hired (or is proposed to be hired) by the Employer or Borrower as Engineer for the contract.
	4.4	A firm shall not be eligible to participate in any procurement activities under an ADB-financed, -administered, or -supported project while under temporary suspension or debarment by ADB pursuant to its Anticorruption Policy (see ITB 3), whether such debarment was directly imposed by ADB, or enforced by ADB pursuant to the Agreement for Mutual Enforcement of Debarment Decisions. A bid from a temporary suspended or debarred firm will be rejected.
	4.5	Government-owned enterprises in the Employer's country shall be eligible only if they can establish that they (i) are legally and financially autonomous, (ii) operate under commercial law, and (iii) are not a dependent agency of the Employer.
	4.6	Bidders shall provide such evidence of their continued eligibility satisfactory to the Employer, as the Employer shall reasonably request.
	4.7	Firms shall be excluded if by an act of compliance with a decision of the United Nations Security Council taken under Chapter VII of the Charter of the United Nations, the Borrower's country prohibits any import of goods or contracting of works or services from that country or any payments to persons or entities in that country.
	4.8	In case a prequalification process has been conducted prior to the bidding process, this bidding is open only to prequalified Bidders.
5. Eligible Materials, Equipment and Services	5.1	The materials, equipment, and services to be supplied under the Contract shall have their origin in eligible source countries as defined in ITB 4.2 above and all expenditures under the Contract will be limited to such materials, equipment, and services. At the Employer's request, Bidders may be required to provide evidence of the origin of materials, equipment, and services.
	5.2	For purposes of ITB 5.1 above, "origin" means the place where the materials and equipment are mined, grown, produced, or manufactured, and from which the services are provided. Materials and equipment are produced when, through manufacturing, processing, or substantial or major assembling of components, a commercially recognized product results that differs substantially in its basic characteristics or in purpose or utility from its components.
B. Contents of Bidding Document		
6. Sections of Bidding Document	6.1	The Bidding Document consist of Parts I, II, and III, which include all the sections indicated below, and should be read in conjunction with

		any addenda issued in accordance with ITB 8. **PART I Bidding Procedures** Section 1 - Instructions to Bidders (ITB) Section 2 - Bid Data Sheet (BDS) Section 3 - Evaluation and Qualification Criteria (EQC) Section 4 - Bidding Forms (BDF) Section 5 - Eligible Countries (ELC) **PART II Requirements** Section 6 – Employer's Requirements (ERQ) **PART III Conditions of Contract and Contract Forms** Section 7 - General Conditions of Contract (GCC) Section 8 - Particular Conditions of Contract (PCC) Section 9 - Contract Forms (COF)
	6.2	The IFB issued by the Employer is not part of the Bidding Document.
	6.3	The Employer is not responsible for the completeness of the Bidding Document and their Addenda, if they were not obtained directly from the source stated by the Employer in the IFB.
	6.4	The Bidder is expected to examine all instructions, forms, terms, and specifications in the Bidding Document. Failure to furnish all information or documentation required by the Bidding Document may result in the rejection of the bid.
7. Clarification of Bidding Document, Site Visit, Pre-Bid Meeting	7.1	A prospective Bidder requiring any clarification on the Bidding Document shall contact the Employer in writing at the Employer's address indicated in the BDS or raise his inquiries during the pre-bid meeting if provided for in accordance with ITB 7.4. The Employer will respond in writing to any request for clarification, provided that such request is received prior to the deadline for submission of bids, within a period given in the BDS. The Employer shall forward copies of its response to all Bidders who have acquired the Bidding Document in accordance with ITB 6.3, including a description of the inquiry but without identifying its source. Should the Employer deem it necessary to amend the Bidding Document as a result of a request for clarification, it shall do so following the procedure under ITB 8 and ITB 22.2.
	7.2	The Bidder is advised to visit and examine the Site of Works and its surroundings and obtain for itself, on its own risk and responsibility, all information that may be necessary for preparing the Bid and entering into a contract for construction of the Works. The costs of visiting the Site shall be at the Bidder's own expense.
	7.3	The Bidder and any of its personnel or agents will be granted permission by the Employer to enter its premises and lands for the purpose of such visit, but only upon the express condition that the Bidder, its personnel, and agents will release and indemnify the Employer and its personnel and agents from and against all liability in respect thereof, and will be responsible for death or personal injury, loss of or damage to property, and any other loss, damage, costs, and expenses incurred as a result of the inspection.

	7.4 The Bidder's designated representative is invited to attend a pre-bid meeting, if provided for in the BDS. The purpose of the meeting will be to clarify issues and to answer questions on any matter that may be raised at that stage.
	7.5 The Bidder is requested to submit any questions in writing, to reach the Employer not later than 1 week before the meeting.
	7.6 Minutes of the pre-bid meeting, including the text of the questions raised, without identifying the source, and the responses given, together with any responses prepared after the meeting, will be transmitted promptly to all Bidders who have acquired the Bidding Document in accordance with ITB 6.3. Any modification to the Bidding Document that may become necessary as a result of the pre-bid meeting shall be made by the Employer exclusively through the issue of an addendum pursuant to ITB 8 and not through the minutes of the pre-bid meeting.
	7.7 Nonattendance at the pre-bid meeting will not be a cause for disqualification of a Bidder.
8. Amendment of Bidding Document	8.1 At any time prior to the deadline for submission of Bids, the Employer may amend the Bidding Document by issuing addenda.
	8.2 Any addendum issued shall be part of the Bidding Document and shall be communicated in writing to all who have obtained the Bidding Document from the Employer in accordance with ITB 6.3.
	8.3 To give prospective Bidders reasonable time in which to take an addendum into account in preparing their Bids, the Employer may, at its discretion, extend the deadline for the submission of Bids, pursuant to ITB 22.2.
C. Preparation of Bids	
9. Cost of Bidding	9.1 The Bidder shall bear all costs associated with the preparation and submission of its Bid, and the Employer shall in no case be responsible or liable for those costs, regardless of the conduct or outcome of the bidding process.
10. Language of Bid	10.1 The Bid, as well as all correspondence and documents relating to the bid exchanged by the Bidder and the Employer, shall be written in the language specified in the BDS. Supporting documents and printed literature that are part of the Bid may be in another language provided they are accompanied by an accurate translation of the relevant passages in the language specified in the BDS, in which case, for purposes of interpretation of the Bid, such translation shall govern.
11. Documents Comprising the Bid	11.1 The Bid shall comprise two envelopes submitted simultaneously, one called the Technical Bid containing the documents listed in ITB 11.2 and the other the Price Bid containing the documents listed in ITB 11.3, both envelopes enclosed together in an outer single envelope.
	11.2 The Technical Bid shall comprise the following:

	(a) Letter of Technical Bid; (b) Bid Security or Bid-Securing Declaration, in accordance with ITB 19; (c) alternative Bids, at Bidder's option and if permissible, in accordance with ITB 13; (d) written confirmation authorizing the signatory of the Bid to commit the Bidder, in accordance with ITB 20.2; (e) documentary evidence in accordance with ITB 17, establishing the Bidder's qualifications to perform the contract; (f) Technical Proposal in accordance with ITB 16; (g) Any other document required in the BDS.
	11.3 The Price Bid shall comprise the following: (a) Letter of Price Bid; (b) completed Price Schedules, in accordance with ITB 12 and ITB 14, or as stipulated in the BDS; (c) alternative price Bids, at Bidder's option and if permissible, in accordance with ITB 13; (d) Any other document required in the BDS.
	11.4 In addition to the requirements under ITB 11.2, Bids submitted by a Joint Venture shall include a copy of the Joint Venture Agreement entered into by all partners. Alternatively, a Letter of Intent to execute a Joint Venture Agreement in the event of a successful Bid shall be signed by all partners and submitted with the Bid, together with a copy of the proposed agreement.
12. Letters of Bid and Schedules	12.1 The Letters of Technical Bid and Price Bid, and the Schedules, and all documents listed under Clause 11, shall be prepared using the relevant forms furnished in Section 4 (Bidding Forms). The forms must be completed without any alterations to the text, and no substitutes shall be accepted. All blank spaces shall be filled in with the information requested and as required in the BDS.
13. Alternative Bids	13.1 Unless otherwise indicated in the BDS, alternative Bids shall not be considered.
	13.2 When alternative times for completion are explicitly invited, a statement to that effect will be included in the BDS, as will the method of evaluating different times for completion.
	13.3 When specified in the BDS pursuant to ITB 13.1, and subject to ITB 13.4 below, Bidders wishing to offer technical alternatives to the requirements of the Bidding Document must first price the Employer's design as described in the Bidding Document and shall further provide all information necessary for a complete evaluation of the alternative by the Employer, including drawings, design calculations, technical specifications, breakdown of prices, and proposed construction methodology and other relevant details. Only the technical alternatives, if any, of the lowest evaluated Bidder conforming to the basic technical requirements shall be considered by the Employer.

	13.4 When specified in the BDS, Bidders are permitted to submit alternative technical solutions for specified parts of the Works. Such parts will be identified in the BDS and described in Section 6 (Employer's Requirements). The method for their evaluation will be stipulated in Section 3 (Evaluation and Qualification Criteria).
14. Bid Prices and Discounts	14.1 The prices and discounts quoted by the Bidder in the Letter of Price Bid and in the Schedules shall conform to the requirements specified below.
	14.2 The Bidder shall submit a bid for the whole of the works described in ITB 1.1 by filling in prices for all items of the Works, as identified in Section 4 (Bidding Forms). In case of admeasurement contracts, the Bidder shall fill in rates and prices for all items of the Works described in the Bill of Quantities. Items against which no rate or price is entered by the Bidder will not be paid for by the Employer when executed and shall be deemed covered by the rates for other items and prices in the Bill of Quantities.
	14.3 The price to be quoted in the Letter of Price Bid shall be the total price of the Bid, excluding any discounts offered. Absence of the total bid price in the Letter of Price Bid may result in the rejection of the Bid.
	14.4 The Bidder shall quote any discounts and the methodology for their application in the Letter of Price Bid, in accordance with ITB 12.1.
	14.5 Unless otherwise provided in the BDS and the Conditions of Contract, the prices quoted by the Bidder shall be fixed. If the prices quoted by the Bidder are subject to adjustment during the performance of the Contract in accordance with the provisions of the Conditions of Contract, the Bidder shall furnish the indexes and weightings for the price adjustment formulas in the Table(s) of Adjustment Data in Section 4 (Bidding Forms) and the Employer may require the Bidder to justify its proposed indexes and weightings.
	14.6 If so indicated in ITB 1.1, bids are being invited for individual contracts or for any combination of contracts (packages). Bidders wishing to offer any price reduction for the award of more than one Contract shall specify in their bid the price reductions applicable to each package, or alternatively, to individual Contracts within the package. Price reductions or discounts shall be submitted in accordance with ITB 14.4, provided the Bids for all contracts are submitted and opened at the same time.
	14.7 All duties, taxes, and other levies payable by the Contractor under the Contract, or for any other cause, as of the date 28 days prior to the deadline for submission of bids, shall be included in the rates and prices and the total Bid Price submitted by the Bidder.
15. Currencies of Bid and Payment	15.1 The currency(ies) of the Bid and payment shall be as specified in the BDS.
	15.2 Bidders may be required by the Employer to justify, to the Employer's satisfaction, their local and foreign currency requirements, and to

		substantiate that the amounts included in the prices shown in the appropriate form(s) of Section 4, in which case a detailed breakdown of the foreign currency requirements shall be provided by Bidders.
16. Documents Comprising the Technical Proposal	16.1	The Bidder shall furnish a Technical Proposal including a statement of work methods, equipment, personnel, schedule, and any other information as stipulated in Section 4 (Bidding Forms), in sufficient detail to demonstrate the adequacy of the Bidders' proposal to meet the work requirements and the completion time.
17. Documents Establishing the Qualifications of the Bidder	17.1	To establish its qualifications to perform the Contract in accordance with Section 3 (Evaluation and Qualification Criteria) the Bidder shall provide the information requested in the corresponding information sheets included in Section 4 (Bidding Forms).
	17.2	Domestic Bidders, individually or in joint ventures, applying for eligibility for domestic preference shall supply all information required to satisfy the criteria for eligibility in accordance with ITB 35.
18. Period of Validity of Bids	18.1	Bids shall remain valid for the period specified in the BDS after the bid submission deadline date prescribed by the Employer. A bid valid for a shorter period shall be rejected by the Employer as nonresponsive.
	18.2	In exceptional circumstances, prior to the expiration of the bid validity period, the Employer may request Bidders to extend the period of validity of their Bids. The request and the responses shall be made in writing. If a bid security is requested in accordance with ITB 19, it shall also be extended 28 days beyond the deadline of the extended validity period. A Bidder may refuse the request without forfeiting its bid security. A Bidder granting the request shall not be required or permitted to modify its Bid.
19. Bid Security/Bid-Securing Declaration	19.1	Unless otherwise specified in the BDS, the Bidder shall furnish as part of its Bid, in original form, either a Bid-Securing Declaration or a bid security as specified in the BDS. In the case of a bid security, the amount and currency shall be as specified in the BDS.
	19.2	If a Bid-Securing Declaration is required pursuant to ITB 19.1, it shall use the form included in Section 4 (Bidding Forms). The Employer will declare a Bidder ineligible to be awarded a Contract for a specified period of time, as indicated in the BDS, if the Bid-Securing Declaration is executed.
	19.3	If a bid security is specified pursuant to ITB 19.1, the bid security shall be, at the Bidder's option, in any of the following forms: (a) an unconditional bank guarantee, (b) an irrevocable letter of credit, or (c) a cashier's or certified check, all from a reputable bank from an eligible country as described in Section 5 (Eligible Countries). In the case of a bank guarantee, the bid security shall be submitted either using the Bid Security Form included in Section 4 (Bidding Forms) or another form acceptable to the Employer. The form must include the complete name of the Bidder.

	The bid security shall be valid for 28 days beyond the original validity period of the bid, or beyond any period of extension if requested under ITB 18.2.
	19.4 Unless otherwise specified in the BDS, any Bid not accompanied by a substantially compliant bid security or Bid-Securing Declaration, if one is required in accordance with ITB 19.1, shall be rejected by the Employer as nonresponsive.
	19.5 If a bid security is specified pursuant to ITB 19.1, the bid security of unsuccessful Bidders shall be returned as promptly as possible upon the successful Bidder's furnishing of the performance security pursuant to ITB 42.
	19.6 If a bid security is specified pursuant to ITB 19.1, the bid security of the successful Bidder shall be returned as promptly as possible once the successful Bidder has signed the Contract and furnished the required performance security.
	19.7 The bid security may be forfeited or the Bid-Securing Declaration executed (a) if a Bidder withdraws its bid during the period of bid validity specified by the Bidder on the Letters of Technical Bid and Price Bid, except as provided in ITB 18.2; or (b) if the successful Bidder fails to (i) sign the Contract in accordance with ITB 41; (ii) furnish a performance security in accordance with ITB 42; (iii) accept arithmetical corrections in accordance with ITB 33; or (iv) furnish a domestic preference security, if applicable, in accordance with ITB 42.
	19.8 The bid security or the Bid-Securing Declaration of a Joint Venture shall be in the name of the Joint Venture that submits the Bid. If the Joint Venture has not been legally constituted at the time of bidding, the bid security or the Bid-Securing Declaration shall be in the names of all future partners as named in the letter of intent mentioned in ITB 4.1.
20. Format and Signing of Bid	20.1 The Bidder shall prepare one original set of the Technical Bid and one original of the Price Bid comprising the Bid as described in ITB 11 and clearly mark it "ORIGINAL - TECHNICAL BID" and "ORIGINAL - PRICE BID." Alternative Bids, if permitted in accordance with ITB 13, shall be clearly marked "ALTERNATIVE." In addition, the Bidder shall submit copies of the Bid in the number specified in the BDS**,** and clearly mark each of them "COPY." In the event of any discrepancy between the original and the copies, the original shall prevail.
	20.2 The original and all copies of the Bid shall be typed or written in indelible ink and shall be signed by a person duly authorized to sign on behalf of the Bidder. This authorization shall consist of a written confirmation as specified in the BDS and shall be attached to the Bid. The name and position held by each person signing the authorization

	must be typed or printed below the signature. All pages of the Bid, except for unamended printed literature, shall be signed or initialed by the person signing the bid. If a Bidder submits a deficient authorization, the Bid shall not be rejected in the first instance. The Employer shall request the Bidder to submit an acceptable authorization within the number of days as specified in the BDS. Failure to provide an acceptable authorization within the prescribed period of receiving such a request shall cause the rejection of the Bid.
	20.3 Any amendments such as interlineations, erasures, or overwriting shall be valid only if they are signed or initialed by the person signing the Bid.
D. Submission and Opening of Bids	
21. Sealing and Marking of Bids	21.1 Bidders may always submit their Bids by mail or by hand. When so specified in the BDS, Bidders shall have the option of submitting their Bids electronically. Procedures for submission, sealing, and marking are as follows: (a) Bidders submitting Bids by mail or by hand shall enclose the original of the Technical Bid, the original of the Price Bid, and each copy of the Technical Bid and each copy of the Price Bid, in separate sealed envelopes, duly marking the envelopes as "ORIGINAL - TECHNICAL BID," "ORIGINAL - PRICE BID," and "COPY NO… - TECHNICAL BID," and "COPY NO…. - PRICE BID." These envelopes, the first containing the originals and the others containing copies, shall then be enclosed in one single envelope per set. If permitted in accordance with ITB 13, alternative Bids shall be similarly sealed, marked and included in the sets. The rest of the procedure shall be in accordance with ITB 21.2 and ITB 21.3. (b) Bidders submitting Bids electronically shall follow the electronic bid submission procedures specified in the BDS.
	21.2 The inner and outer envelopes shall (a) bear the name and address of the Bidder; (b) be addressed to the Employer as provided in BDS 22.1; and (c) bear the specific identification of this bidding process indicated in the BDS 1.1.
	21.3 The outer envelopes and the inner envelopes containing the Technical Bid shall bear a warning not to open before the time and date for the opening of Technical Bid, in accordance with ITB 25.1.
	21.4 The inner envelopes containing the Price Bid shall bear a warning not to open until advised by the Employer in accordance with ITB 25.7.
	21.5 If all envelopes are not sealed and marked as required, the Employer will assume no responsibility for the misplacement or premature opening of the Bid.

22. Deadline for Submission of Bids	22.1 Bids must be received by the Employer at the address and no later than the date and time indicated in the BDS.
	22.2 The Employer may, at its discretion, extend the deadline for the submission of Bids by amending the Bidding Document in accordance with ITB 8, in which case all rights and obligations of the Employer and Bidders previously subject to the deadline shall thereafter be subject to the deadline as extended.
23. Late Bids	23.1 The Employer shall not consider any Bid that arrives after the deadline for submission of bids, in accordance with ITB 22. Any Bid received by the Employer after the deadline for submission of Bids shall be declared late, rejected, and returned unopened to the Bidder.
24. Withdrawal, Substitution, and Modification of Bids	24.1 A Bidder may withdraw, substitute, or modify its Bid – Technical or Price – after it has been submitted by sending a written notice, duly signed by an authorized representative, and shall include a copy of the authorization in accordance with ITB 20.2, (except that withdrawal notices do not require copies). The corresponding substitution or modification of the Bid must accompany the respective written notice. All notices must be (a) prepared and submitted in accordance with ITB 20 and ITB 21 (except that withdrawal notices do not require copies), and in addition, the respective envelopes shall be clearly marked "WITHDRAWAL," "SUBSTITUTION," "MODIFICATION;" and (b) received by the Employer prior to the deadline prescribed for submission of Bids, in accordance with ITB 22.
	24.2 Bids requested to be withdrawn in accordance with ITB 24.1 shall be returned unopened to the Bidders.
	24.3 No Bid may be withdrawn, substituted, or modified in the interval between the deadline for submission of Bids and the expiration of the period of bid validity specified by the Bidder on the Letters of Technical Bid and Price Bid or any extension thereof.
25. Bid Opening	25.1 The Employer shall open the Technical Bids in public at the address, on the date, and time specified in the BDS in the presence of Bidders` designated representatives and anyone who choose to attend. Any specific electronic bid opening procedures required if electronic bidding is permitted in accordance with ITB 21.1, shall be as specified in the BDS. The Price Bids will remain unopened and will be held in custody of the Employer until the specified time of their opening. If the Technical Bid and Price Bid are submitted together in one envelope, the Employer may reject the entire Bid. Alternatively, the Price Bid may be immediately resealed for later evaluation.
	25.2 First, envelopes marked "WITHDRAWAL" shall be opened and read out and the envelope with the corresponding Bid shall not be opened, but returned to the Bidder. No bid withdrawal shall be permitted unless the corresponding withdrawal notice contains a valid authorization to

	request the withdrawal and is read out at bid opening.
	25.3 Second, outer envelopes marked "SUBSTITUTION" shall be opened. The inner envelopes containing the Substitution Technical Bid and/or Substitution Price Bid shall be exchanged for the corresponding envelopes being substituted, which are to be returned to the Bidder unopened. Only the Substitution Technical Bid, if any, shall be opened, read out, and recorded. Substitution Price Bid will remain unopened in accordance with ITB 25.1. No envelope shall be substituted unless the corresponding substitution notice contains a valid authorization to request the substitution and is read out and recorded at bid opening.
	25.4 Next, outer envelopes marked "MODIFICATION" shall be opened. No Technical Bid and/or Price Bid shall be modified unless the corresponding modification notice contains a valid authorization to request the modification and is read out and recorded at the opening of Technical Bids. Only the Technical Bids, both Original as well as Modification, are to be opened, read out, and recorded at the opening. Price Bids, both Original and Modification, will remain unopened in accordance with ITB 25.1.
	25.5 All other envelopes holding the Technical Bids shall be opened one at a time, and the following read out and recorded: (a) the name of the Bidder; (b) whether there is a modification or substitution; (c) the presence of a bid security or a Bid-Securing Declaration, if required; and (d) any other details as the Employer may consider appropriate. Only Technical Bids and alternative Technical Bids read out and recorded at bid opening shall be considered for evaluation. Unless otherwise specified in the BDS, all pages of the Letter of Technical Bid are to be initialed by at least three representatives of the Employer attending the bid opening. No Bid shall be rejected at the opening of Technical Bids except for late bids, in accordance with ITB 23.1.
	25.6 The Employer shall prepare a record of the opening of Technical Bids that shall include, as a minimum, the name of the Bidder and whether there is a withdrawal, substitution, or modification; alternative proposals; and the presence or absence of a bid security or a Bid-Securing Declaration, if one was required. The Bidders' representatives who are present shall be requested to sign the record. The omission of a Bidder's signature on the record shall not invalidate the contents and effect of the record. A copy of the record shall be distributed to all Bidders who submitted Bids on time, and posted online when electronic bidding is permitted.
	25.7 At the end of the evaluation of the Technical Bids, the Employer will invite bidders who have submitted substantially responsive Technical Bids and who have been determined as being qualified for award to attend the opening of the Price Bids. The date, time, and location of the opening of Price Bids will be advised in writing by the Employer. Bidders shall be given reasonable notice for the opening of Price Bids.

	25.8 The Employer will notify Bidders in writing who have been rejected on the grounds of their Technical Bids being substantially nonresponsive to the requirements of the Bidding Document and return their Price Bids unopened.
	25.9 The Employer shall conduct the opening of Price Bids of all Bidders who submitted substantially responsive Technical Bids, in the presence of Bidders` representatives who choose to attend at the address, on the date, and time specified by the Employer. The Bidder's representatives who are present shall be requested to sign a register evidencing their attendance.
	25.10 All envelopes containing Price Bids shall be opened one at a time and the following read out and recorded: (a) the name of the Bidder; (b) whether there is a modification or substitution; (c) the Bid Prices, including any discounts and alternative offers; and (d) any other details as the Employer may consider appropriate. Only Price Bids, discounts, and alternative offers read out and recorded during the opening of Price Bids shall be considered for evaluation. Unless otherwise specified in the BDS, all pages of the Letter of Price Bid and Schedules are to be initialed by at least three representatives of the Employer attending the bid opening.No Bid shall be rejected at the opening of Price Bids.
	25.11 The Employer shall prepare a record of the opening of Price Bids that shall include, as a minimum, the name of the Bidder, the Bid Price (per lot if applicable), any discounts, and alternative offers. The Bidders' representatives who are present shall be requested to sign the record. The omission of a Bidder's signature on the record shall not invalidate the contents and effect of the record. A copy of the record shall be distributed to all Bidders who submitted Bids on time, and posted online when electronic bidding is permitted.
E. Evaluation and Comparison of Bids	
26. Confidentiality	26.1 Information relating to the examination, evaluation, comparison, and postqualification of Bids and recommendation of contract award, shall not be disclosed to Bidders or any other persons not officially concerned with such process until information on Contract award is communicated to all Bidders.
	26.2 Any attempt by a Bidder to influence the Employer in the evaluation of the Bids or Contract award decisions may result in the rejection of its Bid.
	26.3 Notwithstanding ITB 26.2, from the time of bid opening to the time of Contract award, if any Bidder wishes to contact the Employer on any matter related to the bidding process, it may do so in writing.
27. Clarification of	27.1 To assist in the examination, evaluation, and comparison of the

Bids	Technical and Price Bids, the Employer may, at its discretion, ask any Bidder for a clarification of its Bid. Any clarification submitted by a Bidder that is not in response to a request by the Employer shall not be considered. The Employer's request for clarification and the response shall be in writing. No change in the substance of the Technical Bid or prices in the Price Bid shall be sought, offered, or permitted, except to confirm the correction of arithmetic errors discovered by the Employer in the evaluation of the Price Bids, in accordance with ITB 33.
	27.2 If a Bidder does not provide clarifications of its Bid by the date and time set in the Employer's request for clarification, its Bid may be rejected.
28. Deviations, Reservations, and Omissions	28.1 During the evaluation of bids, the following definitions apply: (a) "Deviation" is a departure from the requirements specified in the Bidding Document; (b) "Reservation" is the setting of limiting conditions or withholding from complete acceptance of the requirements specified in the Bidding Document; and (c) "Omission" is the failure to submit part or all of the information or documentation required in the Bidding Document.
29. Examination of Technical Bids	29.1 The Employer shall examine the Technical Bid to confirm that all documents and technical documentation requested in ITB 11.2 have been provided, and to determine the completeness of each document submitted.
	29.2 The Employer shall confirm that the following documents and information have been provided in the Technical Bid. If any of these documents or information is missing, the offer shall be rejected. (a) Letter of Technical Bid; (b) written confirmation of authorization to commit the Bidder; (c) Bid Security or Bid-Securing Declaration, if applicable; and (d) Technical Proposal in accordance with ITB 16.
30. Responsiveness of Technical Bid	30.1 The Employer's determination of a Bid's responsiveness is to be based on the contents of the Bid itself, as defined in ITB 11.
	30.2 A substantially responsive Technical Bid is one that meets the requirements of the Bidding Document without material deviation, reservation, or omission. A material deviation, reservation, or omission is one that, (a) if accepted, would: (i) affect in any substantial way the scope, quality, or performance of the Works specified in the Contract; or (ii) limit in any substantial way, inconsistent with the Bidding Document, the Employer's rights or the Bidder's obligations under the proposed Contract; or (b) if rectified, would unfairly affect the competitive position of other Bidders presenting substantially responsive Bids.

	30.3 The Employer shall examine the technical aspects of the Bid submitted in accordance with ITB 16, Technical Proposal, in particular, to confirm that all requirements of Section 6 (Employer's Requirements) have been met without any material deviation, reservation, or omission.
	30.4 If a Bid is not substantially responsive to the requirements of the Bidding Document, it shall be rejected by the Employer and may not subsequently be made responsive by correction of the material deviation, reservation, or omission.
31. Nonmaterial Nonconformities	31.1 Provided that a Bid is substantially responsive, the Employer may waive any nonconformities in the Bid that do not constitute a material deviation, reservation, or omission.
	31.2 Provided that a Technical Bid is substantially responsive, the Employer may request that the Bidder submit the necessary information or documentation, within a reasonable period of time, to rectify nonmaterial nonconformities in the Technical Bid related to documentation requirements. Requesting information or documentation on such nonconformities shall not be related to any aspect of the Price Bid. Failure of the Bidder to comply with the request may result in the rejection of its Bid.
	31.3 Provided that a Technical Bid is substantially responsive, the Employer shall rectify quantifiable nonmaterial nonconformities related to the Bid Price. To this effect, the Bid Price shall be adjusted, for comparison purposes only, to reflect the price of a missing or non-conforming item or component. The adjustment shall be made using the method indicated in Section 3 (Evaluation and Qualification Criteria).
32. Qualification of the Bidder	32.1 The Employer shall determine to its satisfaction during the evaluation of Technical Bids whether Bidders meet the qualifying criteria specified in Section 3 (Evaluation and Qualification Criteria).
	32.2 The determination shall be based upon an examination of the documentary evidence of the Bidder's qualifications submitted by the Bidder, pursuant to ITB 17.1.
	32.3 An affirmative determination shall be a prerequisite for the opening and evaluation of a Bidder's Price Bid. A negative determination shall result into the disqualification of the Bid, in which event the Employer shall return the unopened Price Bid to the Bidder.
33. Correction of Arithmetical Errors	33.1 During the evaluation of Price Bids, the Employer shall correct arithmetical errors on the following basis: (a) Only for unit price contracts, if there is a discrepancy between the unit price and the total price that is obtained by multiplying the unit price and quantity, the unit price shall prevail and the total price shall be corrected, unless in the opinion of the Employer there is an obvious misplacement of the decimal point in the unit price, in which case the total price as quoted shall govern and the unit price shall be corrected. (b) If there is an error in a total corresponding to the addition or

	subtraction of subtotals, the subtotals shall prevail and the total shall be corrected. (c) If there is a discrepancy between the bid price in the Summary of Bill of Quantities and the bid amount in item (c) of the Letter of Price Bid, the bid price in the Summary of Bill of Quantities will prevail and the bid amount in item (c) of the Letter of Price Bid will be corrected. (d) If there is a discrepancy between words and figures, the amount in words shall prevail, unless the amount expressed in words is related to an arithmetic error, in which case the amount in figures shall prevail subject to (a), (b) and (c) above.
	33.2 If the Bidder that submitted the lowest evaluated bid does not accept the correction of errors, its Bid shall be disqualified and its bid security may be forfeited or its Bid-Securing Declaration executed.
34. Conversion to Single Currency	34.1 For evaluation and comparison purposes, the currency(ies) of the Bid shall be converted into a single currency as specified in the BDS.
35. Margin of Preference	35.1 Unless otherwise specified in the BDS, a margin of preference shall not apply.
36. Evaluation of Price Bids	36.1 The Employer shall use the criteria and methodologies listed in this Clause. No other evaluation criteria or methodologies shall be permitted.
	36.2 To evaluate the Price Bid, the Employer shall consider the following: (a) the bid price, excluding Provisional Sums and the provision, if any, for contingencies in the Summary Bill of Quantities for admeasurement contracts, or Schedule of Prices for lump sum contracts, but including Daywork items, where priced competitively; (b) price adjustment for correction of arithmetic errors in accordance with ITB 33.1; (c) price adjustment due to discounts offered in accordance with ITB 14.4; (d) converting the amount resulting from applying (a) to (c) above, if relevant, to a single currency in accordance with ITB 34; (e) adjustment for nonconformities in accordance with ITB 31.3; and (f) application of all the evaluation factors indicated in Section 3 (Evaluation and Qualification Criteria).
	36.3 The estimated effect of the price adjustment provisions of the Conditions of Contract, applied over the period of execution of the Contract, shall not be taken into account in bid evaluation.
	36.4 If this Bidding Document allows Bidders to quote separate prices for different contracts, and to award multiple contracts to a single Bidder, the methodology to determine the lowest evaluated price of the contract combinations, including any discounts offered in the Letter of Price Bid, is specified in Section 3 (Evaluation and Qualification

	Criteria).
	36.5 If the Bid for an admeasurement contract, which results in the lowest Evaluated Bid Price, is seriously unbalanced, front loaded or substantially below updated estimates in the opinion of the Employer, the Employer may require the Bidder to produce detailed price analyses for any or all items of the Bill of Quantities, to demonstrate the internal consistency of those prices with the construction methods and schedule proposed. After evaluation of the price analyses, taking into consideration the schedule of estimated Contract payments, the Employer may require that the amount of the performance security be increased at the expense of the Bidder to a level sufficient to protect the Employer against financial loss in the event of default of the successful Bidder under the Contract.
37. Comparison of Bids	37.1 The Employer shall compare all substantially responsive Bids to determine the lowest evaluated Bid, in accordance with ITB 36.2.
38. Employer's Right to Accept Any Bid, and to Reject Any or All Bids	38.1 The Employer reserves the right to accept or reject any Bid, and to annul the bidding process and reject all Bids at any time prior to contract award, without thereby incurring any liability to Bidders. In case of annulment, all Bids submitted and specifically, bid securities, shall be promptly returned to the Bidders.
F. Award of Contract	
39. Award Criteria	39.1 The Employer shall award the Contract to the Bidder whose offer has been determined to be the lowest evaluated Bid and is substantially responsive to the Bidding Document, provided further that the Bidder is determined to be qualified to perform the Contract satisfactorily.
40. Notification of Award	40.1 Prior to the expiration of the period of bid validity, the Employer shall notify the successful Bidder, in writing, that its Bid has been accepted.
	40.2 At the same time, the Employer shall also notify all other Bidders of the results of the bidding. The Employer will publish in an English language newspaper or well-known freely accessible website the results identifying the bid and lot numbers and the following information: (i) name of each Bidder who submitted a Bid; (ii) bid prices as read out at bid opening; (iii) name and evaluated prices of each Bid that was evaluated; (iv) name of bidders whose bids were rejected and the reasons for their rejection; and (v) name of the winning Bidder, and the price it offered, as well as the duration and summary scope of the contract awarded. After publication of the award, unsuccessful Bidders may request in writing to the Employer for a debriefing seeking explanations on the grounds on which their Bids were not selected. The Employer shall promptly respond in writing to any unsuccessful Bidder who, after publication of contract award, requests a debriefing.
	40.3 Until a formal contract is prepared and executed, the notification of award shall constitute a binding Contract.
41. Signing of	41.1 Promptly after notification, the Employer shall send the successful

Contract	Bidder the Contract Agreement.
	41.2 Within 28 days of receipt of the Contract Agreement, the successful Bidder shall sign, date, and return it to the Employer.
42. Performance Security	42.1 Within 28 days of the receipt of notification of award from the Employer, the successful Bidder shall furnish the performance security in accordance with the Conditions of Contract, subject to ITB 36.5, using for that purpose the Performance Security Form included in Section 9 (Contract Forms), or another form acceptable to the Employer.
	42.2 Failure of the successful Bidder to submit the above-mentioned Performance Security or to sign the Contract Agreement shall constitute sufficient grounds for the annulment of the award and forfeiture of the bid security or execution of the Bid-Securing Declaration. In that event, the Employer may award the Contract to the next lowest evaluated Bidder whose offer is substantially responsive and is determined by the Employer to be qualified to perform the Contract satisfactorily.
	42.3 The above provision shall also apply to the furnishing of a domestic preference security, if so required.

Section 2 - Bid Data Sheet

A. General

ITB 1.1	The number of the Invitation for Bids (IFB) is **NCB-Works/PICIIP-27**
ITB 1.1	The Employer is: **Program Management Unit (PMU), Punjab Intermediate Cities Improvement Investment Program (PICIIP), Local Government & Community Development Department, Punjab, Pakistan**
ITB 1.1	The name of the bidding process is: **Civil Works for Parking Sheds at Sahiwal and Sialkot including Construction of Boundary Wall and Gate, Surveillance and Security System, Guard / Driver and Equipment, Office Building and Allied Works at Sahiwal and Sialkot.** The identification number of the bidding process is **NCB-Works/PICIIP-27**
ITB 2.1	The Borrower is: **Islamic Republic of Pakistan**
ITB 2.1	The name of the Project is: **Punjab Intermediate Cities Improvement Investment Program (PICIIP)**

B. Contents of Bidding Documents

ITB 7.1	For **clarification purposes** only, the Employer's address is: Attention: **Program Director** **Program Management Unit** **Punjab Intermediate Cities Improvement Investment Program (PICIIP)** **Local Government & Community Development Department, Punjab, Pakistan** Street address: **40 B-1, Gulberg 3, MM Alam Road** City: **Lahore** ZIP code: **54000** Country: **Islamic Republic of Pakistan** Telephone: **+92 42 99268484** Fax: **+92 42 99268483** E-mail address: **pmu.piciip@punjab.gov.pk** Requests for clarification should be received by the Employer no later than: **10 days** before the deadline for submission of the Bid.
ITB 7.4	A Pre-Bid meeting shall take place. Date: ***07 February 2022*** Time: **1100 Hours** Place: **Office of the Program Director** **Program Management Unit (PMU)** **Punjab Intermediate Cities Improvement Investment Program (PICIIP)** **Address: 40 B-1, Gulberg 3, MM Alam Road, Lahore,**

	Pakistan
City:	**Lahore**
Country:	**Islamic Republic of Pakistan**
Telephone:	**+92 42 99268484**

Keeping in mind the convenience of the bidder(s), the bidder(s) can also attend the said meeting through Zoom Link using the ID mentioned below:

Zoom Link ID: https://pitb.zoom.us/j/91524228893

All bidders are encouraged to physically attend the Pre-Bid Meeting; however, the online platform is also available to facilitate participation.

A site visit conducted by the Employer **will not** be organized.

C. Preparation of Bids

ITB 10.1	The language of the Bid is: **English** Bidders are required to submit documentary evidence of below documents in English language. If the documentary evidence are other than in the English language, then the bidder shall submit accurate translation of the relevant passages in the English language duly attested by the notary public of the Bidder's Country/similar legal instrument of authorization as applicable under the laws of the bidder's home country, (specifying the authority for such attestation as per law of the country). Certification by the Foreign Office of the country(ies) of origin of the Bidder(s) is acceptable. All the documentation to be submitted by the Bidder in order to substantiate the information requested in the corresponding Information Sheets, mentioned hereinbelow: a) Form EQU: Equipment b) Form ELI – 1: Bidder's Information Sheet c) Form ELI – 2: Joint Venture Information Sheet d) Form FIN – 1: Historical Financial Performance e) Form FIN – 2: Average Annual Construction Turnover f) Form FIN – 3: Availability of Financial Resources g) Form FIN – 4: Financial Requirements for Current Contract Commitments h) Form EXP – 1: Contracts of Similar Size and Nature; as mentioned under Para 2.4.1, Section 3 of the Bidding Documents. i) Form EXP – 2: Construction Experience in Key Activities; as mentioned under Para 2.4.1, Section 3 of the Bidding Documents
ITB 11.2 (g)	Refer to "Technical Proposal" in Section 4 and "Documents (Submission Requirements)" in Section-3.
ITB 11.3 (b)	In accordance with ITB 12 and ITB 14, the following schedules shall be submitted with the bid, including the priced Bill of Quantities for admeasurement contracts and Activity Schedule for lump sum contracts: **Not Applicable**

ITB 11.3 (d)	The Bidder shall submit with its Price Bid the following additional documents: **Not Applicable**
ITB 12.1	The units and rates in figures entered into the Bill of Quantities and Daywork Schedule should be typewritten or if written by hand, must be in print form. **Bill of Quantities and Daywork Schedule not presented accordingly may be considered nonresponsive.**
ITB 13.1	Alternative Bids **shall not** be permitted.
ITB 13.2	Alternative times for completion **shall not** be permitted
ITB 13.4	Alternative technical solutions **shall not** be permitted for any part of the works
ITB 14.5	The price adjustment **Applicable**.
ITB 14.7	***For the purpose of clarity, it is elaborated that under this Section, the Bidder is expected to consider all applicable, provincial and federal, direct and indirect taxes, in accordance with the relevant laws of Pakistan, in their rates against each item of the Bill of Quantities (Section 4 of Bidding Documents) for example: Punjab Sales Tax (PRA), General Sales Tax (GST), etc.***
ITB 15.1	The unit rates and the prices shall be quoted by the Bidder entirely in: **Local Currency i.e. Pakistani Rupee (PKR).**
ITB 16.1	The Technical Proposal shall also include a Health and Safety COVID-19 Plan, in accordance with the relevant government regulations and guidelines on COVID-19 prevention and control issued by the Government of Pakistan (http://covid.gov.pk/guideline), or in the absence thereof, to international good practice guidelines, such as World Health Organization 2020, Considerations for public health and social measures in the workplace in the context of COVID-19, Geneva available here: https://www.who.int/publications-detail/considerations-for-public-health-andsocial-measures-in-the-workplace-in-the-context-of-covid-19. Absence of or incomplete submission may result in rejection of bid.
ITB 18.1	The bid validity period shall be **120 (one hundred and twenty)** days.
ITB 19.1	A bid securing declaration shall **not** be required. The Bidder shall furnish a **bid security** of amount: **PKR 5.84 Million** Payable in the same currency in which it was submitted in favor of **the Program Director (PD), Program Management Unit (PMU), Punjab Intermediate Cities Improvement Investment Program (PICIIP), 40 B-1, M M Alam Road, Gulberg 3, Lahore, Pakistan.**
ITB 19.2	The ineligibility period will be **Not Applicable**
ITB 19.3	If the bid security is in the form of unconditional bank guarantee, it shall be issued by scheduled bank of Pakistan or a reputable foreign bank, using the Form included in Section 4 (Bidding Forms), in favour of the Employer. Aside from the forms given in ITB 19.3, other forms of bid security acceptable may be a Call Deposit / Pay Order in favour of the Employer.

	Bid security in the form of SWIFT message is not acceptable.
ITB 19.4	Subject to the succeeding sentences, any bid not accompanied by an irrevocable and callable bid security shall be rejected by the Employer as nonresponsive. If a Bidder submits a bid security that (i) deviates in form, amount, and/or period of validity, or (ii) does not provide sufficient identification of the Bidder (including, without limitation, failure to indicate the name of the Joint Venture or, where the Joint Venture has not yet been constituted, the names of all future Joint Venture Partners), the Employer shall request the Bidder to submit a compliant bid security within **seven (07) days** of receiving such a request. Failure to provide a compliant bid security within the prescribed period of receiving such a request shall cause the rejection of the Bid.
ITB 20.1	In addition to the original of the Bid *(technical and financial bids)*, the number of hard copies of **Bid** is: **Three (03)**. *To facilitate evaluation, bidders are encouraged to submit soft copies [two CDs (Compact Disc) or DVD (Digital Versatile Disc) or USB] one each in PDF format with its Technical Bid and Price Bid (Price Bid & BOQs to be provided in excel format also). The soft copy (CD or DVD or USB) of the Technical Bid shall be enclosed in the envelope containing the hard copy of the Bidder's Original Technical Bid, and the soft copy (CD or DVD or USB) of the Price Bid shall be enclosed in the envelope containing the hard copy of the Bidder's Original Price Bid.* *If there is any discrepancy between the data/information in the soft copy (CD or DVD or USB) of the Bidder's Technical Bid and the hard copy of the Bidder's Technical Bid and between the price indicated in the hard copy of the Bidder's Original Price Bid, and in the soft copy (CD or DVD or USB) of the Bidder's Price Bid, the data and information indicated in the hard copy of the Original Technical Bid and the Original Price Bid shall prevail*. ***Note:*** *Submission of the CD/DVD/USB is only for reference and shall not constitute electronic bid submission as stipulated in ITB 21.1(b) and its provision in the Data Sheet.*
ITB 20.2	*The written confirmation of authorization to sign on behalf of the Bidder shall consist of a board resolution or its equivalent, or power of attorney, which should either be:* *a) notarized, or* *b) attested to by an appropriate authority in the Bidder's home country, specifying the representative's authority to sign the bid on behalf of the bidder.* *If the bidder is an intended or existing joint venture, such authorization should be signed by all parties and specify the representative's authority to sign the bid on behalf of the intended or existing joint venture.* *If the joint venture has not yet been formed, also include written evidence from all proposed members of joint venture of their intent to enter into a joint venture in the event of a contract award.* *Only priced Bill of Quantities section must be submitted in typed written form. The remaining parts of the bid shall be typed or written in indelible ink.*
ITB 20.2	The Bidder shall submit an acceptable authorization within **seven (07) days**.

D. Submission and Opening of Bids

ITB 21.1	Bidders **do not** have the option of submitting their Bids electronically.
ITB 21.1 (b)	If Bidders shall have the option of submitting their Bids electronically, the electronic bidding submission procedures shall be: **Not Applicable.**
ITB 22.1	For **bid submission purposes** only, the Employer's address is: Attention: **Program Director** **Program Management Unit (PMU)** **Punjab Intermediate Cities Improvement Investment Program (PICIIP)** **Local Government & Community Development Department, Punjab** Street address: **40 / B-1** **Gulberg 3, MM Alam Road, , Lahore, Pakistan** City: **Lahore** ZIP code: **54000** Country: **Islamic Republic of Pakistan** **The deadline for bid submission is:** Date: ***28 February 2022*** Time: **1500 Hours**
ITB 25.1	The opening of Technical Bid shall take place at: **Office of the Program Director** **Program Management Unit (PMU)** **Punjab Intermediate Cities Improvement Investment Program (PICIIP)** **Local Government & Community Development Department, Punjab** Street address: **40 / B-1** **Gulberg 3, MM Alam Road, Lahore, Pakistan** City: **Lahore** ZIP code: **54000** Country: **Islamic Republic of Pakistan** Date: ***28 February 2022*** Time: **The technical bids shall be opened immediately after the bid submission deadline.**
ITB 25.1	Electronic bid opening procedure shall be as follows: **Not Applicable**
ITB 25.5	The Letter of Technical Bid shall be initialed by at least **three (03)** representatives of the Employer attending Bid opening.
ITB 25.10	The Letter of Price Bid and Bill of Quantities shall be initialed by at least **three (03)** representatives of the Employer attending Bid opening

E. Evaluation and Comparison of Bids

ITB 34.1	The currency that shall be used for bid evaluation and comparison purposes to convert all bid prices expressed in various currencies into single currency is: **Not Applicable**

ITB 35.1	A margin of preference **shall not** apply.

Section 3 - Evaluation and Qualification Criteria

Table of Criteria

1. Evaluation 3-2
1.1 Adequacy of Technical Proposal 3-2
1.2 Completion Time 3-2
1.3 Technical Alternatives 3-2
1.4 Quantifiable Nonconformities and Omissions 3-2
1.5 Margin of Preference 3-2
1.6 Multiple Contracts 3-3
1.7 Other Criteria 3-3

2. Qualification 3-4
2.1 Eligibility 3-4
2.1.1 Nationality 3-4
2.1.2 Conflict of Interest 3-4
2.1.3 ADB Eligibility 3-4
2.1.4 Government-Owned Enterprise 3-4
2.1.5 United Nations Eligibility 3-4
2.1.6 Registration with Pakistan Engineering Council (PEC) 3-5
2.2 Pending Litigation and Arbitration 3-6
2.2.1 Pending Litigation and Arbitration 3-6
2.3 Financial Situation 3-7
2.3.1 Historical Financial Performance 3-7
2.3.2 Average Annual Construction Turnover 3-7
2.3.3 Financial Resources 3-8
2.4 Construction Experience 3-9
2.4.1 Contracts of Similar Size and Nature 3-9
2.4.2 Construction Experience in Key Activities 3-10

1. Evaluation

In addition to the criteria listed in ITB 36.2 (a)–(e), other relevant factors are as follows:

1.1 Adequacy of Technical Proposal

Evaluation of the Bidder's Technical Proposal will include an assessment of the Bidder's technical capacity to mobilize key equipment and personnel for the contract consistent with its proposal regarding work methods, scheduling, and material sourcing in sufficient detail and fully in accordance with the requirements stipulated in Section 6 (Employer's Requirements).

Non-compliance with equipment and personnel requirements described in Section 6 (Employer's Requirements) shall not normally be a ground for bid rejection and such non-compliance will be subject to clarification during bid evaluation and rectification prior to contract award.

1.2 Completion Time

An alternative Completion Time, if permitted under ITB 13.2, will be evaluated as follows:

– Not Applicable –

1.3 1.3 Technical Alternatives

Technical alternatives, if permitted under ITB 13.4, will be evaluated as follows:

– Not Applicable –

1.4 Quantifiable Nonconformities and Omissions

Subject to ITB 14.2 and ITB 36.2, the evaluated cost of quantifiable nonconformities including omissions, is determined as follows:

Pursuant to ITB 31.3, the cost of all quantifiable nonmaterial nonconformities shall be evaluated, including omissions in Daywork where competitively priced but excluding omission of prices in the Bill of Quantities. The Employer will make its own assessment of the cost of any nonmaterial nonconformities and omissions for the purpose of ensuring fair comparison of bids.

1.5 Margin of Preference (Applicable for ICB only)

If a margin of preference shall apply under ITB 35.1, the procedure will be as follows as:

– Not Applicable –

1.6 Multiple Contracts

– Not Applicable –

1.7 Other Criteria

The Employer will take into account the quality of the Health and Safety COVID -19 Plan ('the Plan') attached to the Technical Proposal in its evaluation of the Adequacy of the Technical Proposal.

The bidder should demonstrate in the Plan the health and safety measures they will put in place on site in relation to COVID-19 prevention and controls, including but not limited to, PPE requirements, site set up, training, induction and mobilization of new personnel, equipment and plants cleaning and other hazard management measures while undertaking site work activities, site visitors health and safety protocols, as well as the approach to the monitoring and reporting of the Plan. The Plan should be fit for purpose for the particular construction works of this contract and be aligned with any relevant government regulations and guidelines on COVID-19 prevention and controls, as well as workplace safety requirements, or in the absence thereof, to international good practice guidelines such as World Health Organization 2020. Considerations for public health and social measures in the workplace in the context of COVID- 19 Geneva available here: https://www.who.int/publicationsdetail/considerations-for-public-health-and-social-measures-in-the-workplacein-the-context-of-covid-19.

2. Qualification

It is the legal entity or entities comprising the Bidder, and not the Bidder's parent companies, subsidiaries, or affiliates, that must satisfy the qualification criteria described below.

2.1 Eligibility

Criteria	Compliance Requirements				Documents
		Joint Venture			
Requirement	Single Entity	All Partners Combined	Each Partner	One Partner	Submission Requirements
2.1.1 Nationality					
Nationality in accordance with ITB Subclause 4.2.	must meet requirement	must meet requirement	must meet requirement	not applicable	Forms ELI – 1; ELI – 2 with attachments
2.1.2 Conflict of Interest					
No conflicts of interest in accordance with ITB Subclause 4.3.	must meet requirement	must meet requirement	must meet requirement	not applicable	Letter of Technical Bid
2.1.3 ADB Eligibility					
Not having been declared ineligible by ADB, as described in ITB Subclause 4.4.	must meet requirement	must meet requirement	must meet requirement	not applicable	Letter of Technical Bid
2.1.4 Government-Owned Enterprise					
Bidder required to meet conditions of ITB Subclause 4.5.	must meet requirement	must meet requirement	must meet requirement	not applicable	Forms ELI - 1, ELI - 2 with attachments
2.1.5 United Nations Eligibility					
Not having been excluded by an act of compliance with a United Nations Security Council resolution in accordance with ITB Subclause 4.7.	must meet requirement	must meet requirement	must meet requirement	not applicable	Letter of Technical Bid

2.1.6 Registration with Pakistan Engineering Council (PEC)

National Bidder must be registered with Pakistan Engineering Council (PEC) and shall have a valid registration Certificate (2021) in category **C-3** or above with Specialization in **CE10** at the time of bid submission. *If the winning bidder includes local firm whose registration expires prior to contract award, the firm shall be given reasonable time to extend such registration.*	must meet requirement	not applicable	JV partner must meet requirement as per their respective JV share	must meet requirement	Forms ELI - 1; ELI - 2 with attachments

2.2 Pending Litigation and Arbitration

Pending litigation and arbitration criterion shall apply.

2.2.1 Pending Litigation and Arbitration

Criteria	Compliance Requirements				Documents
Requirement	Single Entity	Joint Venture			Submission Requirements
		All Partners Combined	Each Partner	One Partner	
All pending litigation and arbitration, if any, shall be treated as resolved against the Bidder and so shall in total not represent more than **fifty percent (50%)** of the Bidder's net worth calculated as the difference between total assets and total liabilities.	must meet requirement by itself or as partner to past or existing Joint Venture	not applicable	must meet requirement by itself or as partner to past or existing Joint Venture	not applicable	Form LIT - 1

2.3 Financial Situation

2.3.1 Historical Financial Performance

Criteria	Compliance Requirements				Documents
Requirement	Single Entity	Joint Venture			Submission Requirements
		All Partners Combined	Each Partner	One Partner	
Submission of audited financial statements or, if not required by the law of the Bidder's country, other financial statements acceptable to the Employer, for **years 2019, 2020 & 2021** or the **latest three years** audited financial statement to demonstrate the current soundness of the Bidder's financial position. As a minimum, the Bidder's net worth for the last year calculated as the difference between total assets and total liabilities should be positive.	must meet requirement	not applicable	must meet requirement	not applicable	Form FIN - 1 with attachments

2.3.2 Average Annual Construction Turnover

Criteria	Compliance Requirements				Documents
Requirement	Single Entity	Joint Venture			Submission Requirements
		All Partners Combined	Each Partner	One Partner	
Minimum average annual construction turnover of the amount mentioned below calculated as total certified payments received for contracts in progress or completed, within the last **three (03) years:** **PKR 438 million**	must meet requirement	must meet requirement	must meet 25% of the requirement	must meet 40% of the requirement	Form FIN - 2

2.3.3 Financial Resources

Criteria	Compliance Requirements				Documents
Requirement	**Single Entity**	**Joint Venture**			**Submission Requirements**
		All Partners Combined	**Each Partner**	**One Partner**	
<u>For Single Entities:</u> The Bidder must demonstrate that its financial resources defined in FIN - 3, less its financial obligations for its current contract commitments defined in FIN - 4, meet or exceed the total requirement for the Contracts of: **PKR 109.50 million**	must meet requirement	not applicable	not applicable	not applicable	Form FIN – 3 and Form FIN – 4 If the Bidder want to make use of line of credit to meet financial resource requirement, the bidder shall provide dedicated line of credit from the issuing bank by clearly indicating the name of this project.
<u>For Joint Ventures:</u> (1) One partner must demonstrate that its financial resources defined in FIN - 3, less its financial obligations for its own current contract commitments defined in FIN - 4, meet or exceed its required share of amount mentioned below from the total requirement for the Subject Contract: **PKR 43.80 million** AND	not applicable	not applicable	not applicable	must meet requirement	Form FIN – 3 and Form FIN – 4 If the Bidder want to make use of line of credit to meet financial resource requirement, the bidder shall provide dedicated line of credit from the issuing bank by clearly indicating the name of this project.
(2) Each partner must demonstrate that its financial resources defined in FIN - 3, less its financial obligations for its own current contract commitments defined in FIN - 4, meet or exceed its required share of amount mentioned below from the total requirement for the Subject Contract. **PKR 27.38 million** AND	not applicable	not applicable	must meet requirement	not applicable	Form FIN – 3 and Form FIN – 4 If the Bidder want to make use of line of credit to meet financial resource requirement, the bidder shall provide dedicated line of credit from the issuing bank by clearly indicating the name of this project.
(3) The joint venture must demonstrate that the combined financial resources of all partners defined in FIN - 3, less all the	not applicable	must meet requirement	not applicable	not applicable	Form FIN – 3 and Form FIN – 4 If the Bidder want to make use of line of credit to meet

Criteria	Compliance Requirements				Documents
Requirement	**Single Entity**	**Joint Venture**			**Submission Requirements**
		All Partners Combined	**Each Partner**	**One Partner**	
partners' total financial obligations for the current contract commitments defined in FIN - 4, meet or exceed the total requirement for the contracts mentioned below: **PKR 109.50 million**					financial resource requirement, the bidder shall provide dedicated line of credit from the issuing bank by clearly indicating the name of this project.

2.4 Construction Experience

2.4.1 Contracts of Similar Size and Nature

Criteria	Compliance Requirements				Documents
Requirement	**Single Entity**	**Joint Venture**			**Submission Requirements**
		All Partners Combined	**Each Partner**	**One Partner**	
Participation as a contractor, Joint Venture partner, or Subcontractor, in at least one contract that has been successfully or substantially completed within the last **five (05) years** and that is similar to the proposed works, where the value of the Bidder's participation in the contract exceeds the amount mentioned below. The similarity of the Bidder's participation shall be based on details/characteristics as described in Section 6 "Employer's Requirements" which require experience in execution Construction of a RCC Frame Structure Building or similar works costing a minimum of. **PKR 146 Million**	must meet requirement	not applicable	not applicable	must meet requirement	Form EXP – 1 Completion, or Taking Over or substantial completion certificate from the Employer or by the Engineer indicating Employer's name, contract name, value and completion time to demonstrate compliance with the requirements. If the participation was through a JV or as subcontractor, only the respective share will be considered. Also, Using Form EXP-1, the Bidders must specify percent and amount of participation of total contract amount. The Bidders may also provide pertinent information such as JV/subcontract agreement and payment receipts.

2.4.2 Construction Experience in Key Activities

(May be complied with by the Bidder or by Specialist Subcontractor. If Specialist Subcontractors are proposed by the Bidder for key activities, each Specialist Subcontract must have experience in related key activity as a single entity.

If the key activity is to be undertaken by a Specialist Subcontractor, the Employer shall require evidence of the subcontracting agreement from the Bidder.)

Criteria	Compliance Requirements				Documents
Requirement	Single Entity	Joint Venture			Submission Requirements
		All Partners Combined	Each Partner	One Partner	
For the above or other contracts executed during the period stipulated in 2.4.1 above, a minimum construction experience in the following key activities:	must meet requirements	must meet requirements	not applicable	not applicable	Form EXP – 2 IPCs or Completion/Substantial completion / taking over certificate or certificate of execution of activities from the Employer of completed / substantially completed projects to substantiate experience in Key Activities
Building Works, RCC (Brick Masonry / Concrete Work) *[minimum 10,000 cft]*					
Road or Street Pavements of Concrete, Asphalt or Tiles / Bricks. *[minimum 50,000 cft]*					

Section 4 - Bidding Forms

Table of Forms

Letter of Technical Bid **4-2**

Letter of Price Bid **4-4**

Bid Security **4-6**

Bid-Securing Declaration **4-7**

Technical Proposal **4-9**

Personnel 4-8
Form PER – 1: Proposed Personnel 4-8
Form PER – 2: Resume of Proposed Personnel 4-9
Equipment 4-10
Site Organization 4-11
Method Statement 4-11
Mobilization Schedule 4-11
Construction Schedule 4-11

Bidder's Qualification **4-12**

Form ELI - 1: Bidder's Information Sheet 4-13
Form ELI - 2: Joint Venture Information Sheet 4-14
Form LIT - 1: Pending Litigation and Arbitration 4-15
Form FIN - 1: Historical Financial Performance 4-16
Form FIN - 2: Average Annual Construction Turnover 4-17
Form FIN - 3: Availability of Financial Resources 4-18
Form FIN - 4: Financial Requirement for Current Contract Commitments 4-19
Form FIN - 5: Self-Assessment Tool for Bidder's Compliance to Financial Resources 4-20
Form EXP - 1: Contracts of Similar Size and Nature 4-21
Form EXP - 2: Construction Experience in Key Activities 4-22

Schedules **4-23**

Schedule of Payment Currencies 4-23
Tables of Adjustment Data 4-24
Activity Schedule 4-25
Bill of Quantities 4-26
List of Materials for Secured Advance 4-28

Letter of Technical Bid

The bidder must accomplish the Letter of Technical Bid on its letterhead clearly showing the bidder's complete name and address.

Date:_____

NCB No.: **PICIIP-27-Parking Sheds**

Invitation for Bid No.: **NCB-Works/PICIIP-27**

To:

Program Director (PD)
Program Management Unit (PMU)
Punjab Intermediate City Improvement Investment Program (PICIIP)
Local Government & Community Development Department, Punjab,
40 B-1, Gulberg 3, MM Alam Road, Lahore 54000
Islamic Republic of Pakistan
Phone: +92 42 99268484, +92 42 99268483
Email: pmu.piciip@punjab.gov.pk

We, the undersigned, declare that:

(a) We have examined and have no reservations to the Bidding Documents, including Addenda issued in accordance with Instructions to Bidders (ITB) 8.

(b) We offer to execute in conformity with the Bidding Documents the following Works:

"Civil Works for Parking Sheds at Sahiwal and Sialkot including Construction of Boundary Wall and Gate, Surveillance and Security System, Guard / Driver and Equipment, Office Building and Allied Works at Sahiwal and Sialkot".

(c) Our Bid consisting of the Technical Bid and the Price Bid shall be valid for a period of **120 (one hundred and twenty) days** from the date fixed for the bid submission deadline in accordance with the Bidding Documents, and it shall remain binding upon us and may be accepted at any time before the expiration of that period.

(d) Our firm, including any Subcontractors or Suppliers for any part of the Contract, have nationalities from eligible countries in accordance with ITB 4.2.

(e) We, including any Subcontractors or Suppliers for any part of the contract, do not have any conflict of interest in accordance with ITB 4.3.

(f) We are not participating, as a Bidder in more than one Bid in this bidding process in accordance with ITB 4.3(e), other than alternative offers submitted in accordance with ITB 13.

(g) Our firm, its affiliates or subsidiaries, including any Subcontractors or Suppliers for any part of the contract, has not been declared ineligible by ADB, under the Employer's country laws or

official regulations or by an act of compliance with a decision of the United Nations Security Council.

(h) [We are not a government-owned enterprise] / [We are a government-owned enterprise but meet the requirements of ITB 4.5].[1]

(i) We agree to permit ADB or its representative to inspect our accounts and records and other documents relating to the bid submission and to have them audited by auditors appointed by ADB.

(j) If our Bid is accepted, we commit to mobilizing key equipment and personnel in accordance with the requirements set forth in Section 6 (Employer's Requirements) and our technical proposal, or as otherwise agreed with the Employer.

Name .....

In the capacity of .....

Signed .....

Duly authorized to sign the Bid for and on behalf of .....

Date .....

[1] Use one of the two options as appropriate.

Letter of Price Bid

The bidder must accomplish the Letter of Price Bid on its letterhead clearly showing the bidder's complete name and address.

Date:_____

NCB No.: **PICIIP-27-Parking Sheds**

Invitation for Bid No.: **NCB-Works/PICIIP-27**

To:

Program Director (PD)
Program Management Unit (PMU)
Punjab Intermediate City Improvement Investment Program (PICIIP)
Local Government & Community Development Department, Punjab,
40 B-1, Gulberg 3, MM Alam Road, Lahore 54000
Islamic Republic of Pakistan
Phone: +92 42 99268484, +92 42 99268483
Email: pmu.piciip@punjab.gov.pk

We, the undersigned, declare that:

(a) We have examined and have no reservations to the Bidding Documents, including Addenda issued in accordance with Instructions to Bidders (ITB) 8.

(b) We offer to execute in conformity with the Bidding Documents the following Works:
"Civil Works for Parking Sheds at Sahiwal and Sialkot including Construction of Boundary Wall and Gate, Surveillance and Security System, Guard / Driver and Equipment, Office Building and Allied Works at Sahiwal and Sialkot".

(c) The total price of our Bid, excluding any discounts offered in item (d) below is:

[*amount of foreign currency in words*], [*amount in figures*], and [*amount of local currency in words*], [*amount in figures*]

The total bid price from the Summary of Bill of Quantities for admeasurement contracts or Activity Schedule for lump sum contracts should be entered by the bidder inside this box. Absence of the total bid price in the Letter of Price Bid may result in the rejection of the bid.

(d) The discounts offered and the methodology for their application are as follows: [. . . *insert discounts and methodology for their application if any* . . .]

(e) Our Bid shall be valid for a period of **120 (one hundred and twenty) days** from the date fixed for the bid submission deadline in accordance with the Bidding Documents, and it shall remain binding upon us and may be accepted at any time before the expiration of that period.

(f) If our Bid is accepted, we commit to obtain a performance security in accordance with the Bidding Documents.

(g) We have paid, or will pay the following commissions, gratuities, or fees with respect to the bidding process or execution of the Contract: [1]

Name of Recipient	Address	Reason	Amount
.....	.....	.....	.....
.....	.....	.....	.....

(h) We understand that this bid, together with your written acceptance thereof included in your notification of award, shall constitute a binding contract between us, until a formal contract is prepared and executed.

(i) We understand that you are not bound to accept the lowest evaluated bid or any other bid that you may receive.

(j) We agree to permit ADB or its representative to inspect our accounts and records and other documents relating to the bid submission and to have them audited by auditors appointed by ADB.

Name .....

In the capacity of .....

Signed .....

Duly authorized to sign the Bid for and on behalf of .....

Date .....

[1] If none has been paid or is to be paid, indicate “None”.

Bid Security
Bank Guarantee

Bank's name, and address of issuing branch or office[1]

Beneficiary: .....*Name and address of the employer* .....

Date:.....

Bid Security No.: .....

We have been informed that . . . . . *name of the bidder*. . . . . (hereinafter called "the Bidder") has submitted to you its bid dated . . . . . (hereinafter called "the Bid") for the execution of . . . . . *name of contract* . . . . . under Invitation for Bids No. . . . . ("the IFB").

Furthermore, we understand that, according to your conditions, bids must be supported by a bid guarantee.

At the request of the Bidder, we . . . . . *name of bank*. . . . . hereby irrevocably undertake to pay you any sum or sums not exceeding in total an amount of . . . . . .*amount in words* . . . . . (. . . . . .*amount in figures* . . . . .) upon receipt by us of your first demand in writing accompanied by a written statement stating that the Bidder is in breach of its obligation(s) under the bid conditions, because the Bidder

(a) has withdrawn its Bid during the period of bid validity specified by the Bidder in the Letter of Technical Bid and Letter of Price Bid; or

(b) does not accept the correction of errors in accordance with the Instructions to Bidders (hereinafter "the ITB"); or

(c) having been notified of the acceptance of its Bid by the Employer during the period of bid validity, (i) fails or refuses to execute the Contract Agreement, or (ii) fails or refuses to furnish the Performance Security, in accordance with the ITB, or (iii) fails or refuses to furnish the domestic preference security, if required.

This guarantee will expire (a) if the Bidder is the successful Bidder, upon our receipt of copies of the Contract Agreement signed by the Bidder and the Performance Security issued to you upon the instruction of the Bidder; and (b) if the Bidder is not the successful Bidder, upon the earlier of (i) our receipt of a copy your notification to the Bidder of the name of the successful Bidder, or (ii) 28 days after the expiration of the Bidder's bid.

Consequently, any demand for payment under this guarantee must be received by us at the office on or before that date.

This guarantee is subject to the Uniform Rules for Demand Guarantees, ICC Publication No. 458.[2]

. . . . . *Authorized signature(s) and bank's seal (where appropriate)* . . . . . .

– Note –

In case of a joint venture, the bid security must be in the name of all partners to the joint venture that submits the bid.

[1] All italicized text is for use in preparing this form and shall be deleted from the final document.

[2] Or 758 as applicable.

Bid-Securing Declaration

Date: *[insert date (as day, month and year)]*
Bid No.: *[insert number of bidding process]*

Alternative No.: [insert identification No if this is a bid for an alternative]

To: [insert complete name of the employer]

We, the undersigned, declare that:

We understand that, according to your conditions, bids must be supported by a Bid-Securing Declaration.

We accept that we will automatically be suspended from being eligible for bidding in any contract with the Borrower for the period of time of *[insert the number of months or years indicated in ITB 18.1 of the BDS]* starting on the date that we receive a notification from the Employer, if we are in breach of our obligation(s) under the bid conditions, because we

(a) have withdrawn our Bid during the period of bid validity specified in the Letter of Technical Bid and Letter of Price Bid; or

(b) do not accept the correction of errors in accordance with the Instruction to Bidders (hereinafter "the ITB"); or

(c) having been notified of the acceptance of our Bid by the Employer during the period of bid validity, (i) fail or refuse to execute the Contract, if required, (ii) fail or refuse to furnish the Performance Security, in accordance with the ITB, or (iii) fail or refuse to furnish the Domestic Preference Security, if required.

NOT APPLICABLE

We understand this Bid-Securing Declaration shall expire if we are not the successful Bidder, upon the earlier of (i) our receipt of your notification to us of the name of the successful Bidder; or (ii) 28 days after the expiration of our Bid.

Signed: *[insert signature of person whose name and capacity are shown]*

In the capacity of *[insert legal capacity of person signing the Bid-Securing Declaration]*

Name: *[insert complete name of person signing the Bid-Securing Declaration]*

Duly authorized to sign the bid for and on behalf of *[insert complete name of the bidder]*

Dated on _____ day of _____, _____

Corporate Seal [where appropriate]

– Note –

In case of a joint venture, the Bid-Securing Declaration must be in the name of all partners to the joint venture that submits the bid.

Technical Proposal

Personnel

Form PER – 1: Proposed Personnel
Bidder should provide the details of the proposed personnel and their experience record in the relevant Information Forms below for each candidate:

1.	**Title of position***
	Name
2.	**Title of position***
	Name
3.	**Title of position***
	Name
4.	**Title of position***
	Name
etc.	**Title of position***
	Name

-- Note --

**As listed in Section 6 (Employer's Requirements).*

Form PER – 2: Resume of Proposed Personnel

The Bidder shall provide all the information requested below. Use one form for each position.

Position		
Personnel information	**Name**	**Date of birth**
	Professional qualifications	
Present employment	**Name of employer**	
	Address of employer	
	Telephone	**Contact (manager / personnel officer)**
	Fax	**E-mail**
	Job title	**Years with present employer**

Summarize professional experience in reverse chronological order. Indicate particular technical and managerial experience relevant to the project.

From	**To**	**Company / Project / Position / Relevant Technical and Management Experience**

Equipment

Form EQU: Equipment

The Bidder shall provide adequate information and details to demonstrate clearly that it has the capability to meet the equipment requirements indicated in Section 6 (Employer's Requirements), using the Forms below. A separate Form shall be prepared for each item of equipment listed, or for alternative equipment proposed by the Bidder.

Item of Equipment		
Equipment Information	**Name of manufacturer**	**Model and power rating**
	Capacity	**Year of manufacture**
Current Status	**Current location**	
	Details of current commitments	
Source	**Indicate source of the equipment** ☐ **Owned** ☐ **Rented** ☐ **Leased** ☐ **Specially manufactured**	

Omit the following information for equipment owned by the Bidder.

Owner	**Name of owner**	
	Address of owner	
	Telephone	**Contact name and title**
	Fax	**Telex**
Agreements	**Details of rental / lease / manufacture agreements specific to the project**	

Technical Proposal

Personnel

Equipment

Site Organization

Method Statement

Traffic Diversion Plan

Mobilization Schedule

Construction Schedule

COVID-19 Specific Site Health and Safety Management Plan in accordance with ITB 16.1

NOTE: The bidder should demonstrate in the Plan the health and safety measures they will put in place on site in relation to COVID-19 prevention and controls, including but not limited to, PPE requirements, site set up, training, induction and mobilization of new personnel, equipment and plants cleaning and other hazard management measures while undertaking site work activities, site visitors health and safety protocols, as well as the approach to the monitoring and reporting of the Plan. The Plan should be fit for purpose for the particular construction works of this contract and be aligned with any relevant government regulations and guidelines on COVID-19 prevention and controls, as well as workplace safety requirements, or in the absence thereof, to international good practice guidelines such as World Health Organization 2020. Considerations for public health and social measures in the workplace in the context of COVID- 19 Geneva available here: https://www.who.int/publicationsdetail/considerations-for-public-health-and-social-measures-in-the-workplacein-the-context-of-covid-19.

Other Documents in accordance with ITB 11.2(g) of Section 2-Bid Data Sheet, as under:

(i) Quality Control Methods for Building Construction & Steel Structure Works

(ii) Health & Safety management plan.

(iii) Environment safety plan.

(iv) Bidders are encouraged to submit colored photographs of project sites as optional.

Bidders Qualification

To establish its qualifications to perform the contract in accordance with Section 3 (Evaluation and Qualification Criteria) the Bidder shall provide the information requested in the corresponding Information Sheets included hereunder.

Form ELI - 1: Bidder's Information Sheet

Bidder's Information	
Bidder's legal name	
In case of a Joint Venture, legal name of each partner	
Bidder's country of constitution	
Bidder's year of constitution	
Bidder's legal address in country of constitution	
Bidder's authorized representative (name, address, telephone number(s), fax number(s), e-mail address)	

Attached are copies of the following documents.

- ❑ 1. In case of a single entity, articles of incorporation or constitution of the legal entity named above, in accordance with ITB 4.1 and ITB 4.2.
- ❑ 2. Authorization to represent the firm or Joint Venture named above, in accordance with ITB 20.2.
- ❑ 3. In case of a Joint Venture, a letter of intent to form a Joint Venture or Joint Venture agreement, in accordance with ITB 4.1.
- ❑ 4. In case of a government-owned enterprise, any additional documents not covered under 1 above required to comply with ITB 4.5.

Form ELI - 2: Joint Venture Information Sheet

Each member of the Joint Venture and Specialist Subcontractor must fill out this form separately.

Joint Venture / Specialist Subcontractor Information	
Bidder's legal name	
Joint Venture Partner's or Specialist Subcontractor's legal name	
Joint Venture Partner's or Specialist Subcontractor's country of constitution	
Joint Venture Partner's or Specialist Subcontractor's year of constitution	
Joint Venture Partner's or Specialist Subcontractor's legal address in country of constitution	
Joint Venture Partner's or Specialist Subcontractor's authorized representative information (name, address, telephone number(s), fax number(s), e-mail address)	

Attached are copies of the following documents.

- ❑ 1. Articles of incorporation or constitution of the legal entity named above, in accordance with ITB 4.1 and ITB 4.2.
- ❑ 2. Authorization to represent the firm named above, in accordance with ITB 20.2.
- ❑ 3. In the case of a government-owned enterprise, documents establishing legal and financial autonomy and compliance with commercial law, in accordance with ITB 4.5.

A Specialist Subcontractor is a specialist enterprise engaged for highly specialized processes that cannot be provided by the main Contractor.

Form LIT – 1: Pending Litigation and Arbitration

Each Bidder must fill out this form if so required under Criterion 2.2 of Section 3 (Evaluation and Qualification Criteria) to describe any pending litigation or arbitration formally commenced against it.

In case of a Joint Venture, each Joint Venture Partner must fill out this form separately and provide the Joint Venture Partner's name below:

Joint Venture Partner: _____

Pending Litigation and Arbitration

Choose one of the following:

❑ No pending litigation and arbitration.

❑ Below is a description of all pending litigation and arbitration involving the Bidder (or each Joint Venture member if Bidder is a Joint Venture).

Year	Matter in Dispute	Value of Pending Claim in PKR Equivalent	Value of Pending Claim as a Percentage of Net Worth
	Following information to be provided against each dispute: Contract Identification: *[indicate complete contract name/ number, and any other identification]* Name of Employer: *[insert full name]* Address of Employer: *[insert street/city/country]* Matter of Dispute: *[indicate full description of dispute]* Party who initiated the dispute: *[indicate "Employer" or "Contractor"]* Status: *[indicate status of dispute]*		

- Note -

This form shall only be included if Criterion 2.2 of Section 3 (Evaluation and Qualification Criteria) is applicable.

Form FIN - 1: Historical Financial Performance

Each Bidder must fill out this form.

In case of a Joint Venture, each Joint Venture Partner must fill out this form separately and provide the Joint Venture Partner's name below:

Joint Venture Partner: _____

Financial Data for Previous ___ Years [PKR]		
Year 1:	**Year 2:**	**Year 3:**

Information from Balance Sheet

Total Assets (TA)			
Total Liabilities (TL)			
Net Worth = TA – TL			
Current Assets (CA)			
Current Liabilities (CL)			
Working Capital = CA - CL			

Most Recent Working Capital		To be obtained for most recent year and carried forward to FIN - 3 Line 1; in case of Joint Ventures, to the corresponding Joint Venture Partner's FIN - 3.

Information from Income Statement

Total Revenues			
Profits Before Taxes			
Profits After Taxes			

❑ Attached are copies of financial statements (balance sheets including all related notes, and income statements) for the last _____ years, as indicated above, complying with the following conditions.

- Unless otherwise required by Section 3 of the Bidding Document, all such documents reflect the financial situation of legal entity or entities comprising the Bidder and not the Bidder's parent companies, subsidiaries, or affiliates.
- Historical financial statements must be audited by a certified accountant.
- Historical financial statements must be complete, including all notes to the financial statements.
- Historical financial statements must correspond to accounting periods already completed and audited (no statements for partial periods shall be requested or accepted).

Form FIN - 2: Average Annual Construction Turnover

Each Bidder must fill out this form.

The information supplied should be the Annual Turnover of the Bidder or each member of a Joint Venture in terms of the amounts billed to clients for each year for work in progress or completed.

In case of a Joint Venture, each Joint Venture Partner must fill out this form separately and provide the Joint Venture Partner's name below:

Joint Venture Partner: _____

Annual Turnover Data for the Last ___ Years (Construction only)			
Year	**Amount Currency**	**Exchange Rate**	**PKR**
		Average Annual Construction Turnover	

Form FIN – 3: Availability of Financial Resources

Bidder must demonstrate sufficient financial resources, usually comprising of Working Capital supplemented by credit line statements or overdraft facilities and others to meet the Bidder's financial requirements for

(a) its current contract commitments, and

(b) the subject contract.

In case of a Joint Venture, each Joint Venture Partner must fill out this form separately and provide the Joint Venture Partner's name below:

Joint Venture Partner: _____

Financial Resources		
No.	**Source of financing**	**Amount (PKR)**
1	Working Capital (to be taken from FIN - 1)	
2	Credit Line[a]	
3	Other Financial Resources	
	Total Available Financial Resources	

[a] ***To be substantiated by a letter from the bank issuing the line of credit. Line of credited (specific to this project) confirmed by issuing bank within last one month (prior to submission of the bid) clearly indicating the name of this project. i.e "Civil Works for Parking Sheds at Sahiwal and Sialkot including Construction of Boundary Wall and Gate, Surveillance and Security System, Guard / Driver and Equipment, Office Building and Allied Works at Sahiwal and Sialkot".***

Form FIN- 4: Financial Resources Requirement

Bidders (or each Joint Venture partner) should provide information on their current commitments on **all contracts that have been awarded, or for which a letter of intent or acceptance has been received, or for contracts approaching completion, but for which an unqualified, full completion certificate has yet to be issued**.

In case of a Joint Venture, each Joint Venture Partner must fill out this form separately and provide the Joint Venture Partner's name below:

Joint Venture Partner: _____

Current Contract Commitments						
No.	**Name of Contract**	**Employer's Contact (Address, Tel, Fax)**	**Contract Completion Date**	**Outstanding Contract Value (X) [a]**	**Remaining Contract Period in months (Y) [b]**	**Monthly Financial Resources Requirement (X / Y)**
1						
2						
3						
4						
Total Monthly Financial Requirements for Current Contract Commitments						PKR …….

[a] *Remaining outstanding contract values to be calculated from 28 days prior to the bid submission deadline (PKR).*

[b] *Remaining contract period to be calculated from 28 days prior to bid submission deadline.*

Form FIN - 5: Self-Assessment Tool for Bidder's Compliance to Financial Resources (Criterion 2.3.3 of Section 3)

This form requires the same information submitted in Forms FIN - 3 and FIN - 4. All conditions of "Available Financial Resources Net of CCC ≥ Requirement for the Subject Contract" must be satisfied to qualify.

Form FIN - 5A: For Single Entities

For Single Entities: (A)	Total Available Financial Resources from FIN – 3 (B)	Total Monthly Financial Requirement for Current Contract Commitments (CCC) from FIN – 4 (C)	Available Financial Resources Net of CCC D = (B - C)	Requirement for the Subject Contract (E)	Results: Yes or No [*D must be greater than or equal to E*] (F)
_____ (Name of Bidder)				. . . . . _	

Form FIN - 5B: For Joint Ventures

For Joint Ventures: (A)	Total Available Financial Resources from FIN – 3 (B)	Total Monthly Financial Requirement for Current Contract Commitments (CCC) from FIN – 4 (C)	Available Financial Resources Net of CCC D = (B - C)	Requirement for the Subject Contract (E)	Results: Yes or No [*D must be greater than or equal to E*] (F)
One Partner:					
_____ (Name of Partner)				. . . . .	
Each Partner:					
_____ (Name of Partner 1)				. . . . .	
_____ (Name of Partner 2)				. . . . .	
_____ (Name of Partner 3)				. . . . .	
All partners combined	∑ D = Sum of available financial resources net of current contract commitments for all partners		∑ D = _____	. . . . .	

Form FIN – 5 is made available for use by the bidder as a self-assessment tool, and by the employer as an evaluation work sheet, to determine compliance with the financial resources requirement as stated in 2.3.3. Failure to submit Form FIN - 5 by the Bidder shall not lead to bid rejection.

Form EXP – 1: Contracts of Similar Size and Nature

Fill up one (1) form per contract.

Contract of Similar Size and Nature			
Contract No . . . . . of	**Contract Identification**		
Award Date		**Completion Date**	
Total Contract Amount			**PKR**
If partner in a Joint Venture or subcontractor, specify participation of total contract amount	**Percent of Total**	**Amount**	
Employer's Name **Address** **Telephone/Fax Number** **E-mail**			
Description of the Similarity in Accordance with Criterion 2.4.1 of Section 3 (Evaluation and Qualification Criteria)			
Participation as a contractor, Joint Venture partner, or Subcontractor, in at least one contract that has been successfully or substantially completed within the last five (05) years and that is similar to the proposed works, where the value of the Bidder's participation in the contract exceeds the amount mentioned below. The similarity of the Bidder's participation shall be based on details/characteristics as described in Section 6 "Employer's Requirements" which require experience in execution of Construction of a RCC Frame Structure Building or similar works costing a minimum of; **PKR 146 Million**	***Documentary evidences may include the following, as mentioned in Para 2.4.1. of the Section 3 of the Bidding Documents:*** *Completion, or Taking Over or substantial completion certificate from the Employer or by the Engineer indicating Employer's name, contract name, value and completion time to demonstrate compliance with the requirements.* *If the participation was through a JV or as subcontractor, only the respective share will be considered. Also, Using Form EXP-1, the Bidders must specify percent and amount of participation of total contract amount. The Bidders may also provide pertinent information such as JV/subcontract agreement and payment receipts.*		

Form EXP - 2: Construction Experience in Key Activities

Fill up one (1) form per contract.

Contract with Similar Key Activities			
Contract No . . . . . of	**Contract Identification**		
Award Date		**Completion Date**	
Total Contract Amount			**PKR**
If partner in a Joint Venture or subcontractor, specify participation of total contract amount	**Percent of Total**	**Amount**	
Employer's Name **Address** **Telephone Number** **Fax Number** **E-mail**			
Description of the Key Activities in Accordance with Criterion 2.4.2 of Section 3 (Evaluation and Qualification Criteria)			
Building Works (Brick Masonry / Concrete Work) *[minimum 10,000 cft]*	***Documentary evidences may include the following, as mentioned in Para 2.4.2. of the Section 3 of the Bidding Documents:*** *IPCs or Completion/Substantial completion / taking over certificate or certificate of execution of activities from the Employer of completed / substantially completed projects to substantiate experience in Key Activities.*		
Road or Street Pavements of Concrete, Asphalt or Tiles / Bricks. *[minimum 50,000 cft]*			

Schedules

Schedule of Payment Currencies

For .....*insert name of Section of the Works* .....

Separate tables may be required if the various sections of the Works (or of the Bill of Quantities) will have substantially different foreign and local currency requirements. In such a case, the Employer should prepare separate tables for each Section of the Works.

	A	B	C	D
Name of Payment Currency	**Amount of Currency**	**Rate of Exchange to Local Currency**	**Local Currency Equivalent C = A x B**	**Percentage of Net Bid Price (NBP) $\frac{100xC}{NBP}$**
Local Currency		**1.00**		
Foreign Currency #1				
Foreign Currency #2				
Foreign Cur				
Net Bid Price				**100.00**
Provisional Sums Expressed in Local Currency		**1.00**		
BID PRICE				

Not Applicable

-- Note --

The rates of exchange shall be the selling rates 28 days prior to the deadline for submission of bids published by the source specified in BDS 15.

Table(s) of Adjustment Data

Table A - Local Currency

Index Code	Index Description	Unit	Weightages (coefficient)	Source of Index
(i)	Fixed Portion	-	a: 0.56	-
(ii)	High Speed Diesel	Per Liters	*--to be proposed by bidder--* (Acceptable range 0.063 to 0.077	Monthly Rates of Materials as notified by the Finance Department, Government of Punjab for the respective month as specified in the Contract and the respective district.
(iii)	Labour Unskilled	Per Day	*--to be proposed by bidder--* (Acceptable range 0.1350 to 0.165	
(iv)	Cement (Ordinary Portland Cement)	Per Bag	*--to be proposed by bidder--* (Acceptable range 0.036 to 0.044)	
(v)	M.S. Bars Deformed (Grade-60)	Metric Ton	*--to be proposed by bidder--* (Acceptable range 0.072 to 0.088)	
(vi)	Structure Steel (MS Girder, Beams and channels etc.)	Metric Ton	*--to be proposed by bidder--* (Acceptable range 0.090 to 0.110	
	Total		**1.000** **[Sum of (ii), (iii) (iv) (v) and (vi) shall not increase 0.44]**	

Note:

1. Base value of Specified Materials shall be as of actual consolidated index prevailing on the base date notified by the Project Manager with the approval of the Employer after the award of works. The Base Date means the date 28 days prior to the deadline for bid submission.
2. Adjustment of increase / decrease shall only be admissible for the materials listed above.
3. Value of work done for price adjustment purpose shall be value of permanent works (Excluding Bill for General Items & Provisional Sums).
4. All Amounts in Pak Rupees only.
5. If weightages proposed by the bidder exceed the limit/acceptable range specified above, it shall not be a cause bid rejection however the coefficients will be finalized before contract award after justifications by bidder.

Table B - Foreign Currency *(NOT APPLICABLE)*

Name of Currency: .....

Insert name of currency. If the bidder wishes to quote in more than one foreign curr more than three, this table should be repeated for each foreign currency.

To be entered by the

Not Applicable

Index Code	Index Description					Bidder's Proposed Weighting (coefficient)
						a: *(by Employer)* b: _____ c: _____ d: _____ e: _____
					Total	**1.00**

-- Note --

"Base Date" means the date 28 days prior to the deadline for submission of bids.

Tables of Adjustment Data shall only be included if prices are to be quoted as adjustable prices in accordance with ITB 14.5.

Bill of Quantities

A. Preamble

1. The Bill of Quantities shall be read in conjunction with the Instructions to Bidders, General and Particular Conditions of Contract, Technical Specifications, and Drawing

2. The quantities given in the Bill of Quantities are estimated and provisional and are given to provide a common basis for bidding. The basis of payment will be the actual quantities of work executed and measured by the Contractor and verified by the Project Manager and valued at the rates and prices entered in the priced Bill of Quantities, where applicable, and otherwise at such rates and prices as the Project Manager may fix as per the Contract.

3. The rates and prices entered in the priced Bill of Quantities shall, except insofar as it is otherwise provided under the Contract include all costs of Contractor's plant, labour, supervision, materials, execution, insurance, profit, taxes and duties, together with all general risks, liabilities and obligations set out or implied in the Contract. Furthermore, all duties, taxes and other levies payable by the Contractor under the Contract, or for any other cause, as on the date 28 days prior to deadline for submission of Bids, shall be included in the rates and prices and the total Bid Price submitted by the Bidder.

4. A rate or price shall be entered against each item in the priced Bill of Quantities, whether quantities are stated or not. The cost of items against which the Contractor has failed to enter a rate or price shall be deemed covered by other rates and prices entered in the Bill of Quantities. The units and rates in figures entered into the Bill of Quantities should be typewritten or if written by hand, must be in print form. Bill of Quantities not presented accordingly may be considered nonresponsive

5. The whole cost of complying with the provisions of the Contract shall be included in the items provided in the priced Bill of Quantities, and where no items are provided, the cost shall be deemed to be distributed among the rates and prices entered for the related items of the Works.

6. Complete description of items of works in the Bill of Quantities, general directions, conditions and limitations of works, location and place of works, applicable methods, means to be adopted, type and quality of materials, use of tools, plant, and machinery are not necessarily repeated not summarized in the Bill of Quantities. Reference to the relevant sections of the Contract documentation, Technical Specifications and Drawings shall be made before entering prices against each item in the priced Bill of Quantities

7. Provisional sums if included and so designated in the Bill of Quantities shall be expended in whole or in part at the direction and discretion of the Project Manager in accordance with the Conditions of Contract.

8. The "Ref Specs" mentioned in the Bill of Quantities indicates the Technical Specifications section number(s) which are to be followed during execution of item of work in accordance with the applicable drawings.

9. Unless otherwise stated in the text of the priced Bill of Quantities, the quantities have to be measured and paid in accordance with the Measurement and Payment Clauses given in

the relevant Technical Specifications or in accordance with implied meaning of the specifications. Any special method of measurement stated in the text of priced Bill of Quantities is limited to the concerned items only.

10. All rates and amounts are in **Pakistani Rupees*. For the purpose of clarity, it is elaborated that serial no. 03 of Preamble to this Bill of Quantities, the Contractor is expected to consider all applicable, provincial and federal, direct and indirect taxes, in accordance with the relevant laws of Pakistan, in their rates against each item of the Bill of Quantities for example: Punjab Sales Tax (PRA), General Sales Tax (GST), etc.***

PUNJAB INTERMIDIATE CITIES IMPROVEMENT INVESTMENT PROGRAM (PICIIP)

MISCELLANEOUS CIVIL WORKS FOR PARKING SHEDS AT SAHIWAL AND SIALKOT

GRAND SUMMARY

SR NO	DESCRIPTION	AMOUNT (Rs.)	
		In Figures	In Words
1	MISCELLANEOUS CIVIL WORKS FOR PARKING SHEDS AT FREED TOWN SAHIWAL		
2	MISCELLANEOUS CIVIL WORKS FOR PARKING SHEDS AT MUBARAK PURA SIALKOT		
3	MISCELLANEOUS CIVIL WORKS FOR PARKING SHEDS AT ALLAMA IQBAL TOWN SIALKOT		
4	ENVIRONMENTAL MANAGEMENT PLAN	4,944,000	
	TOTAL COST (Rs.)		
	GRAND TOTAL IN MILLION		

PUNJAB INTERMEDIATE CITIES IMPROVEMENT INVESTMENT PROGRAM (PICIIP)

MISCELLANEOUS CIVIL WORKS FOR PARKING SHEDS AT FREED TOWN SAHIWAL

BRICK MASONARY BOUNDARY WALL
BILL OF QUANTITIES

B-1.1 ARCHITECTUAL AND STRUCTURAL WORKS

Bill No. 1 BRICK MASONARY BOUNDARY WAL

Sr. No.	MRS 2nd Bi-Annual 2021 Chap#/Item#	Description	Unit	Quantity	Rate (Rs)		Amount (Rs)
					In Figure	*In words*	
1	3/21(b)	Excavation in foundation of building, bridges and other structures, including dagbelling, dressing, refilling around structure with excavated earth, watering and rammiing lead upto one chain (30 m) and lift upto 5 ft. (1.5 m)					
		b) upto 5 ft. (1.5 m)in ordinary soil	Cft	50,245.65			
2	7/30	Select Fill for specifications see the geotechnical rcommendations					
		***(Supplying and filling sand under floor or plugging in wells).**	Per Cft	25,122.83			
3	6/5(h)	Cement concrete plain including placing, compacting, finishing and curing complete (including screening and washing of stone aggregate):					
		(i) 1500 psi Ratio (1:3:6)	Cft	1,932.53			
4	6/6(a)(i)(3)	Providing and laying reinforced cement concrete (including prestressed concrete), using coarse sand and screened graded and washed aggregate, in required shape and design, including forms, moulds, shuttering, lifting, compacting, curing, rendering and finishing exposed surface, complete (but excluding the cost of steel reinforcement, its fabrication and placing in position, etc.):-					

PUNJAB INTERMEDIATE CITIES IMPROVEMENT INVESTMENT PROGRAM (PICIIP)

MISCELLANEOUS CIVIL WORKS FOR PARKING SHEDS AT FREED TOWN SAHIWAL

BRICK MASONARY BOUNDARY WALL
BILL OF QUANTITIES

B-1.1 ARCHITECTUAL AND STRUCTURAL WORKS

Bill No. 1 BRICK MASONARY BOUNDARY WAL

Sr. No.	MRS 2nd Bi-Annual 2021 Chap#/Item#	Description	Unit	Quantity	Rate (Rs)		Amount (Rs)
					In Figure	*In words*	
5		(a) (i) Reinforced cement concrete in roof slab, beams, columns lintels, girders and other structural members laid in situ or precast laid in position, or prestressed members cast in situ, complete in all respects:- 2500psi with ratio(1:2:4)	Per Cft	698.41			
6	6/6(a)(ii)(3)	(a) (ii) Reinforced cement concrete in slab of rafts / strip foundation, base slab of column and retaining walls; etc and other structural members other than those mentioned in 5(a) (i) above not requiring form work (i.e. horizental shuttering) complete in all respects:- 2500psi with ratio(1:2:4)	Per Cft	1,174.01			
7	6/9('c)	Fabrication of mild steel reinforcement for cement concrete, including cutting, bending, laying in position, making joints and fastenings, including cost of binding wire and labour charges for binding of steel reinforcement (also includes removal of rust from bars):- ('c) Deformed bars (Grade-60)	Tons	4.42			
8	7/4(i)	Pacca brick work in foundation and plinth in:- (Plinth protection) i) Cement, sand mortar:- Ratio 1:3	Cft	9,659.40			

PUNJAB INTERMEDIATE CITIES IMPROVEMENT INVESTMENT PROGRAM (PICIIP)

MISCELLANEOUS CIVIL WORKS FOR PARKING SHEDS AT FREED TOWN SAHIWAL

BRICK MASONARY BOUNDARY WALL
BILL OF QUANTITIES

B-1.1 ARCHITECTUAL AND STRUCTURAL WORKS

Bill No. 1 BRICK MASONARY BOUNDARY WAL

Sr. No.	MRS 2nd Bi-Annual 2021 Chap#/Item#	Description	Unit	Quantity	Rate (Rs)		Amount (Rs)
					In Figure	*In words*	
9	7/5(i)	Pacca brick work in ground floor:-i) Cement, sand mortar:- Ratio 1:3	Cft	5,797.45			
10	11/8 C	Cement plaster 1:3 upto 20' (6.00 m) heightc) ¾" (20 mm) thick	Sft	7,730.47			
11	11/16 B	Cement pointing flush upto 20' (6.00 m) heihgt b) ratio 1:3	Sft	10,306.80			
12	25/50	Providing and fixing barbed wire fencing on compound wall, consisting of 1½"x1½"x3/16" (40x40x5mm) angle iron post 3' (900 mm) long, 4' (1200 mm) apart embedded in cement concrete 1:4:8 base of size 6"x6"x9" (150x150x225 mm) and 4 rows of barbed wire, including binding wire, painting posts, etc. complete in all respects.	Rft	1,227.00			
						Total Amount	

PUNJAB INTERMEDIATE CITIES IMPROVEMENT INVESTMENT PROGRAM (PICIIP)

MISCELLANEOUS CIVIL WORKS FOR PARKING SHEDS AT FREED TOWN SAHIWAL

OFFICE BUILDING (STAFF OFFICE, DRIVER ROOM & TOILETS)
BILL OF QUANTITIES

B-1.1 ARCHITECTUAL AND STRUCTURAL WORKS

Bill No. 2 OFFICE BUILDING (STAFF OFFICE, DRIVER ROOM & TOILETS)

Sr. No	M.R.S 2nd BI-Annual 2021 (Chap/Item)	Description	Unit	Quantity	Rate (Rs.)		Amount (Rs.)
					In Figure	In Words	
1	3/21(b)	Excavation in foundation of building, bridges and other structures, including dagbelling, dressing, refilling around structure with excavated earth, watering and rammiing lead upto one chain (30 m) and lift upto 5 ft. (1.5 m)					
		b) upto 5 ft. (1.5 m)in ordinary soil	Cft	9,129.82			
2	7/30	Select Fill for specifications see the geotechnical rcommendations					
		*** (Supplying and filling sand under floor or plugging in wells).**	Cft	9,129.82			
3	26/42	TERMITE CONTROL TREATMENT foundations and floors complete in all respects as shown on the drawings/specifications and/or as directed by the Engineer. (Spraying anti -	SFT	8041.22			
4	6/5(h)	Cement concrete plain including placing, compacting, finishing and curing complete (including screening and washing of stone aggregate):					
		(i) 1500 psi Ratio (1:3:6)	Cft	462.35			

PUNJAB INTERMEDIATE CITIES IMPROVEMENT INVESTMENT PROGRAM (PICIIP)

MISCELLANEOUS CIVIL WORKS FOR PARKING SHEDS AT FREED TOWN SAHIWAL

OFFICE BUILDING (STAFF OFFICE, DRIVER ROOM & TOILETS)
BILL OF QUANTITIES

B-1.1 ARCHITECTUAL AND STRUCTURAL WORKS

Bill No. 2 OFFICE BUILDING (STAFF OFFICE, DRIVER ROOM & TOILETS)

Sr. No	M.R.S 2nd BI-Annual 2021 (Chap/Item)	Description	Unit	Quantity	Rate (Rs.)		Amount (Rs.)
5	6/6(a)(ii)(3)	Providing and laying reinforced cement concrete (including prestressed concrete), using coarse sand and screened graded and washed aggregate, in required shape and design, including forms, moulds, shuttering, lifting, compacting, curing, rendering and finishing exposed surface, complete (but excluding the cost of steel reinforcement, its fabrication and placing in position, etc.):-					
5A		(a)(ii) Reinforced cement concrete in slab of rafts / strip foundation, base slab of column and retaining walls; etc and other structural members other than those mentioned in 5(a) (i) above not requiring form work (i.e. horizental shuttering) complete in all respects:- 2500psi (Ratio 1:2:4)	Per Cft	1,153.79			
5B	6/6(a)(i)(3)	(a) (i) Reinforced cement concrete in roof slab, beams, columns lintels, girders and other structural members laid in situ or precast laid in position, or prestressed members cast in situ, complete in all respects:- 2500psi (Ratio 1:2:4)	Per Cft	1,197.50			

PUNJAB INTERMEDIATE CITIES IMPROVEMENT INVESTMENT PROGRAM (PICIIP)

MISCELLANEOUS CIVIL WORKS FOR PARKING SHEDS AT FREED TOWN SAHIWAL

OFFICE BUILDING (STAFF OFFICE, DRIVER ROOM & TOILETS)
BILL OF QUANTITIES

B-1.1 ARCHITECTUAL AND STRUCTURAL WORKS

Bill No. 2 OFFICE BUILDING (STAFF OFFICE, DRIVER ROOM & TOILETS)

Sr. No	M.R.S 2nd BI-Annual 2021 (Chap/Item)	Description	Unit	Quantity	Rate (Rs.)		Amount (Rs.)
6	6/9('c)	Fabrication of mild steel reinforcement for cement concrete, including cutting, bending, laying in position, making joints and fastenings, including cost of binding wire and labour charges for binding of steel reinforcement (also includes removal of rust from bars):-					
		('c) Deformed bars (Grade-60)	Tons	5.05			
7	7/4(i)	Pacca brick work in foundation and plinth in:- (Plinth protection) i) Cement, sand mortar:- Ratio 1:3	Cft	3,001.24			
		Damp Proof Course					
8	6/33(b)(i)	Providing and laying damp proof course (1.5" Thick) of cement concrete 1:2: 4(using cement, sand and shingle), including bitumen coating (2 Coats of Bitumen)	Sft	563.46			
9	6/35(b)(ii)b	Providing and laying vertical damp proof course with cement sand plaster (3/4" thick with 1:3 ratio) and bitumen coating (2 Coats of Bitumen)	Sft	497.18			

PUNJAB INTERMEDIATE CITIES IMPROVEMENT INVESTMENT PROGRAM (PICIIP)

MISCELLANEOUS CIVIL WORKS FOR PARKING SHEDS AT FREED TOWN SAHIWAL

OFFICE BUILDING (STAFF OFFICE, DRIVER ROOM & TOILETS)
BILL OF QUANTITIES

B-1.1 ARCHITECTUAL AND STRUCTURAL WORKS

Bill No. 2 OFFICE BUILDING (STAFF OFFICE, DRIVER ROOM & TOILETS)

Sr. No	M.R.S 2nd BI-Annual 2021 (Chap/Item)	Description	Unit	Quantity	Rate (Rs.)		Amount (Rs.)
10	3/15 (i)	Filling, watering and ramming earth under floors:- ***with surplus earth from foundation, etc.***	1000 Cft.	5.00			
11	3/17 (a, b,c,d)	Transportation of ***Earth all types*** when the total distance including the lead covered in the item of work, is more than 1000 ft.(300 m)	1000 Cft.	7.00			
12	3/24 (a, b-i)	Compaction of **Earthwork** (soft, ordinary or hard soil) :-	1000 Cft.	7.00			
13	7/30	Supplying and filling ***sand under floor*** ; or plugging in wells.	100 Cft.	8.00			
14		Cement **Concrete plain** including placing, compacting, finishing and curing complete (including screening and washing of stone aggregate)					
	6/5 (i)	*Ratio 1:4:8 (under floor.)*	100 Cft.	7.00			
	6/5 (f)	*Ratio 1:2:4 (under floor.)*	100 Cft.	2.00			
15		**Brickwork.**					

PUNJAB INTERMEDIATE CITIES IMPROVEMENT INVESTMENT PROGRAM (PICIIP)

MISCELLANEOUS CIVIL WORKS FOR PARKING SHEDS AT FREED TOWN SAHIWAL

OFFICE BUILDING (STAFF OFFICE, DRIVER ROOM & TOILETS)
BILL OF QUANTITIES

B-1.1 ARCHITECTUAL AND STRUCTURAL WORKS

Bill No. 2 OFFICE BUILDING (STAFF OFFICE, DRIVER ROOM & TOILETS)

Sr. No	M.R.S 2nd BI-Annual 2021 (Chap/Item)	Description	Unit	Quantity	Rate (Rs.)		Amount (Rs.)
	7/5.(i)	Pacca brick work in ground floor:-:- Cement, sand mortar:-**Ratio 1:5**	100 Cft.	26.00			
	7/5.(i)	Pacca brick work in ground floor:-:- Cement, sand mortar:-**Ratio 1:4**	100 Cft.	2.00			
16	9/5-9/12	**Roofing.** Providing and laying 9" x 4½" x 1½" (225mm x 113mm x 40 mm) **brick tiles** grouted with cement sand 1:3, laid over 4"(100 mm) (average) thick earth with 1" (25 mm) mud plaster without Bhoosaw, grouted with cement sand 1:3 on top of **RCC roof slab**, ***excluding c*** *ost of 34 lbs. per %Sft. or 1.72 Kg/Sq.m bitumen coating sand blinded* **.**					
		First Floor	100 Sft.	20.00			
17	26/37 (ii)	Supplying and laying **polythene sheet** over D.P.C. under floors and on roofs, etc. *500 gauge*	Sft.	3,929.00			

PUNJAB INTERMEDIATE CITIES IMPROVEMENT INVESTMENT PROGRAM (PICIIP)

MISCELLANEOUS CIVIL WORKS FOR PARKING SHEDS AT FREED TOWN SAHIWAL

OFFICE BUILDING (STAFF OFFICE, DRIVER ROOM & TOILETS)
BILL OF QUANTITIES

B-1.1 ARCHITECTUAL AND STRUCTURAL WORKS

Bill No. 2 OFFICE BUILDING (STAFF OFFICE, DRIVER ROOM & TOILETS)

Sr. No	M.R.S 2nd BI-Annual 2021 (Chap/Item)	Description	Unit	Quantity	Rate (Rs.)		Amount (Rs.)
18	9/45 (c)	Providing and Laying Insulation material of ***Extruded Polystyrene XPS*** in Rigid Insulation / Foam Board on roof or walls, Density 32-38Kg/M3, compressive strength 250-400 kpa, R-value 5 per inch thickness and water absorption (1% by volume, cell structure colored cell) i/c cutting and placing in position complete in all respect.					
		2" thick	100 Sft.	20.00			
19	9/15	Construction of Khuras on roof 2' x 2' x 6"	Each.	2.00			
		Flooring.					
20	10/15 (e)	Providing and laying **2" thick topping** of cement concrete 1:2:4, including surface finishing and dividing in panels.	100 Sft.	7.00			
21	10/42 (a)	Providing and fixing size 1½" x 3/8" (40 x 10 mm) **marble strip** of any shade for dividing the mosaic flooring into panels.	Rft.	427.00			
22	11/10 (b)	**Surface Rendering.** Cement plaster ratio 1:3 under **soffit of R.C.C. roof slabs** only, upto 20' height. 3/8" (10 mm) thick.	100 Sft.	17.00			

PUNJAB INTERMEDIATE CITIES IMPROVEMENT INVESTMENT PROGRAM (PICIIP)

MISCELLANEOUS CIVIL WORKS FOR PARKING SHEDS AT FREED TOWN SAHIWAL

OFFICE BUILDING (STAFF OFFICE, DRIVER ROOM & TOILETS)
BILL OF QUANTITIES

B-1.1 ARCHITECTUAL AND STRUCTURAL WORKS

Bill No. 2 OFFICE BUILDING (STAFF OFFICE, DRIVER ROOM & TOILETS)

Sr. No	M.R.S 2nd BI-Annual 2021 (Chap/Item)	Description	Unit	Quantity	Rate (Rs.)		Amount (Rs.)
23	11/9 (b)	Cement plaster 1:4 on **internal walls** upto 20' (6.00 m) height and ½" (13 mm) thick.	100 Sft.	29.00			
24	11/9 (c)	Cement plaster 1:4 on **internal walls** upto 20' (6.00 m) height and ¾" (20 mm) thick.	100 Sft.	19.00			
25	11/9 (c)	Cement plaster 1:4 on ***external walls*** upto 20' (6.00 m) height and ¾" (20 mm) thick.	100 Sft.	39.00			
		Wood Work.					
26	12/27 (b)	Providing and fixing **chowkat for doors**, windows and C.windows, including holdfast, etc. ***Deodar wood***	Sft.	119.00			
27	12/50	Providing and fixing 1½" thick **solid core flush doo**r shutter sterling make or equivalent with commercial ply (5 mm thick) on both sides double pressed and deodar wood lipping 1½" x ⅜" around shutter including chromium plated fitting, iron hinges ***without aluminium kick plate 22 SWG on both sides and finger plate*** complete in all respect.	Sft.	307.00			

PUNJAB INTERMEDIATE CITIES IMPROVEMENT INVESTMENT PROGRAM (PICIIP)

MISCELLANEOUS CIVIL WORKS FOR PARKING SHEDS AT FREED TOWN SAHIWAL

OFFICE BUILDING (STAFF OFFICE, DRIVER ROOM & TOILETS)
BILL OF QUANTITIES

B-1.1 ARCHITECTUAL AND STRUCTURAL WORKS

Bill No. 2 OFFICE BUILDING (STAFF OFFICE, DRIVER ROOM & TOILETS)

Sr. No	M.R.S 2nd BI-Annual 2021 (Chap/Item)	Description	Unit	Quantity	Rate (Rs.)		Amount (Rs.)
28	12/58 (b)	Providing and fixing **ornamental wooden architrave** 3" x (1½" tapered to ¼") all along the door frame complete in all respect.					
		Deodar wood architrave	Sft.	375.00			
29	12/21	Providing and fixing, approved quality **mortice lock** complete in all respect.	Each.	15.00			
30	12/18 (i)	Providing and fixing Iron **sliding bolt**, 10" long complete in all respect.	Each.	8.00			
		Painting & Varnishing.					
31	13/7 (a)	French polishing complete:- on new work	100 Sft.	3.00			
32	13/5 (c)	Preparing surface and painting of **doors and windows** any type (including edges):- 03-coats	100 Sft.	1.00			
33	13/31	Preparing surface and painting with two (02) coats **Emulsion paint** complete in all respect.	100 Sft.	52.00			

PUNJAB INTERMEDIATE CITIES IMPROVEMENT INVESTMENT PROGRAM (PICIIP)

MISCELLANEOUS CIVIL WORKS FOR PARKING SHEDS AT FREED TOWN SAHIWAL

OFFICE BUILDING (STAFF OFFICE, DRIVER ROOM & TOILETS)
BILL OF QUANTITIES

B-1.1 ARCHITECTUAL AND STRUCTURAL WORKS

Bill No. 2 OFFICE BUILDING (STAFF OFFICE, DRIVER ROOM & TOILETS)

Sr. No	M.R.S 2nd BI-Annual 2021 (Chap/Item)	Description	Unit	Quantity	Rate (Rs.)		Amount (Rs.)
34	13/32A	Providing and applying **weather shield paint** of approved quality on external surface of building including preparation of surface, application of primer complete in all respect: ***(02-Coats)***	100 Sft.	39.00			
		Iron Work.					
35	25/51	Providing and fixing all types of partly fixed and partly ***openable glazed anodised bronze colour aluminium doors,*** using deluxe section, having chowkat frame of size 40 x 100 mm (1½" x 4") and leaf frame of 60x40mm (2½"x1½") wide all of aluminium section thickness 1.6mm thick including 5mm thick imported tinted sections glass with aluminium triangular gola and rubber gasket to support the glass and leaf edging, using approved standard fittings, locks, 3" (75 mm) wide long handles etc., and hardware any required as approved by the engineer in-charge	Sft.	108.00			

PUNJAB INTERMEDIATE CITIES IMPROVEMENT INVESTMENT PROGRAM (PICIIP)

MISCELLANEOUS CIVIL WORKS FOR PARKING SHEDS AT FREED TOWN SAHIWAL

OFFICE BUILDING (STAFF OFFICE, DRIVER ROOM & TOILETS)
BILL OF QUANTITIES

B-1.1 ARCHITECTUAL AND STRUCTURAL WORKS

Bill No. 2 OFFICE BUILDING (STAFF OFFICE, DRIVER ROOM & TOILETS)

Sr. No	M.R.S 2nd BI-Annual 2021 (Chap/Item)	Description	Unit	Quantity	Rate (Rs.)		Amount (Rs.)
36	25/52+ 25/53	Providing and fixing all types of glazed **aluminium window**s of anodized champagne colour partly fixed and party sliding using deluxe section of approved manufacturer having Frame of size100 mm x 30 mm using frame at bottom, at topand side leaf leaf frame sections of 60mm x 23mm at top & bottom and size 45mm x 25mm at centerand size 45mm x 25mm at sides, Jali leaf frame size 43mm x 13mm i/c fine quality aluminium jali, 5mm thick imported tinted glass with rubber gasket using approved standard latches, wheel, stopper, brush channel angle joint and hardware etc. complete in all respect. (2 mm thick)	Sft.	191.00			
		MRSTotal					
II	**NON MRS ITEMS**						
37	RA-01	Demolition of ***Existing Structures*** including disposal of salvage materials upto any lift & lead, including ***Stacking/ Handing over re-useable material to the Employer,*** complete in all respects or as directed by the Engineer. ***(Composite Rate Building Covered Area)***	Sft.	3,120.00			

PUNJAB INTERMEDIATE CITIES IMPROVEMENT INVESTMENT PROGRAM (PICIIP)

MISCELLANEOUS CIVIL WORKS FOR PARKING SHEDS AT FREED TOWN SAHIWAL

OFFICE BUILDING (STAFF OFFICE, DRIVER ROOM & TOILETS)
BILL OF QUANTITIES

B-1.1 ARCHITECTUAL AND STRUCTURAL WORKS

Bill No. 2 OFFICE BUILDING (STAFF OFFICE, DRIVER ROOM & TOILETS)

Sr. No	M.R.S 2nd BI-Annual 2021 (Chap/Item)	Description	Unit	Quantity	Rate (Rs.)		Amount (Rs.)
38	RA-02	Provide and apply 2-coats of ***cold applied rubberized bitumen*** of approved manufacture's @ 1kg/m²/coat over 0.75kg/m² primer coat (mixed with 6% water) respectively, over well prepared surfaces complete in all respects and /or as directed by the Engineer in charge.	Sft.	1,965.00			
		Flooring.					
39	RA-03	Providing and laying ***8"x10"x1/4" thick, Ceramic Matt Tiles pre-polished (Local Origin) on floor*** in approved patterns over a bedding mortar of ¾" thick 1:2 cement sand mortar and jointing/filling with matching colour grout of white cement and colour pigment, complete in all respects as per the approval of the Engineer.	Sft.	414.00			

PUNJAB INTERMEDIATE CITIES IMPROVEMENT INVESTMENT PROGRAM (PICIIP)

MISCELLANEOUS CIVIL WORKS FOR PARKING SHEDS AT FREED TOWN SAHIWAL

OFFICE BUILDING (STAFF OFFICE, DRIVER ROOM & TOILETS)
BILL OF QUANTITIES

B-1.1 ARCHITECTUAL AND STRUCTURAL WORKS

Bill No. 2 OFFICE BUILDING (STAFF OFFICE, DRIVER ROOM & TOILETS)

Sr. No	M.R.S 2nd BI-Annual 2021 (Chap/Item)	Description	Unit	Quantity	Rate (Rs.)		Amount (Rs.)
40	RA-04	Providing and laying ***8"x10"x1/4" thick, Ceramic Glazed Tiles pre-polished (Local Origin) Skirting/ Dado*** , in approved patterns laid in pigment over 1:2 cement sand mortar ¾" thick, including jointing/filling with matching colour grout of white cement and colour pigment, complete in all respects as per the approval of the Engineer.	Sft.	1,357.00			
41	RA-05	Providing and laying ***12"x12"x¾" thick China Verona*** Marble of approved quality, colour, shade and texture, on ***floor*** laid over ¾" thick bedding of cement sand mortar 1:2, including grinding and chemical polishing, jointed and grouted with white cement mixed with imported matching colour pigment, complete in all respect as shown on the drawings and/or as directed by the Engineer.	Sft.	1,243.00			

PUNJAB INTERMEDIATE CITIES IMPROVEMENT INVESTMENT PROGRAM (PICIIP)

MISCELLANEOUS CIVIL WORKS FOR PARKING SHEDS AT FREED TOWN SAHIWAL

OFFICE BUILDING (STAFF OFFICE, DRIVER ROOM & TOILETS)
BILL OF QUANTITIES

B-1.1 ARCHITECTUAL AND STRUCTURAL WORKS

Bill No. 2 OFFICE BUILDING (STAFF OFFICE, DRIVER ROOM & TOILETS)

Sr. No	M.R.S 2nd BI-Annual 2021 (Chap/Item)	Description	Unit	Quantity	Rate (Rs.)		Amount (Rs.)
42	RA-06	Providing and fixing of ***12"x4"x½" Skirting China Verona Marble*** , set with neat cement paste over ¾" thick 1:2 cement sand base plaster, including grinding and chemical polishing, jointed and grouted with white cement mixed with pigment. complete in all respects as per the approval of the Engineer.	Sft.	109.00			
43	RA-07	Providing and laying **pre-polished China Verona** ¾" thick (single piece) of approved quality, colour, shade and texture for ***stair treads*** set over ¾" thick 1:2 cement sand mortar i/c rendering-off 2 No. non-skidding grooves (¾" wide and ¼" deep) in each steps, rounding-off front edge complete in all respect as shown in the drawings and/or as directed by the Engineer.	Sft.	37.00			
44	RA-08	Providing and laying ½" thick pre polished ***China Verona*** of approved quality, colour, shade and texture for ***stair risers*** laid over ¾" thick 1:2 cement sand mortar, complete in all respect as shown on the drawings and/or as directed by the Engineer.	Sft.	19.00			

PUNJAB INTERMEDIATE CITIES IMPROVEMENT INVESTMENT PROGRAM (PICIIP)

MISCELLANEOUS CIVIL WORKS FOR PARKING SHEDS AT FREED TOWN SAHIWAL

OFFICE BUILDING (STAFF OFFICE, DRIVER ROOM & TOILETS)
BILL OF QUANTITIES

B-1.1 ARCHITECTUAL AND STRUCTURAL WORKS

Bill No. 2 OFFICE BUILDING (STAFF OFFICE, DRIVER ROOM & TOILETS)

Sr. No	M.R.S 2nd BI-Annual 2021 (Chap/Item)	Description	Unit	Quantity	Rate (Rs.)		Amount (Rs.)
45	RA-09	Providing and laying pre-polished ***China Verona Slab ¾" thick*** rendered with bevelled edges on ***counter top*** set over ¾" thick 1:2 cement sand mortar and exposed joints filled with matching colour grout of white cement and colour pigment. complete in all respect as shown on the drawings and/or as directed by the Engineer.	Sft.	69.00			
46	RA-10	**Iron Work.** *(Before execution of below mentioned itemized works the Contractor shall provide the shop drawings for the prior approval of the Engineer)* Providing and fixing ***Diamond Mesh (24 SWG)*** , with concrete nails at location of concrete interfacing masonry complete in all respect as shown on the drawings, and/ or as directed by the Engineer.	Sft.	485.00			

PUNJAB INTERMEDIATE CITIES IMPROVEMENT INVESTMENT PROGRAM (PICIIP)

MISCELLANEOUS CIVIL WORKS FOR PARKING SHEDS AT FREED TOWN SAHIWAL

OFFICE BUILDING (STAFF OFFICE, DRIVER ROOM & TOILETS)
BILL OF QUANTITIES

B-1.1 ARCHITECTUAL AND STRUCTURAL WORKS

Bill No. 2 OFFICE BUILDING (STAFF OFFICE, DRIVER ROOM & TOILETS)

Sr. No	M.R.S 2nd BI-Annual 2021 (Chap/Item)	Description	Unit	Quantity	Rate (Rs.)		Amount (Rs.)
47	RA-11	Providing, fabricating and fixing ***16 SWG M.S. Sheet*** **hollow pressed jamb frame** (factory primed) for doors welded with M.S. flat 10"x1½"x1/8" hold fasts i/c welding/ screwing 4" long iron hinges, filling 1:4 cement sand mortar for the jamb frame and embedding hold fast in the adjoining walls with 1:2:4 concrete, enamel painting etc. complete in all respects as shown on the drawings and/ or as directed by the Engineer, in-conformance with following sizes; ***10½" x 2½"***	Sft.	162.00			
48	RA-12	Providing, fabricating and fixing 16 SWG M.S. Sheet hollow pressed jamb frame (factory primed) for doors welded with M.S. flat size 6"x1"x1/8", hold fasts i/c welding/ screwing 4" long iron hinges, filling concrete for the jamb frame and embedding hold fast in the adjoining walls with 1:2:4 concrete, enamel painting etc. complete in all respects as shown on the drawings and/ or as directed by the Engineer, in-conformance with following sizes. ***5½"x2½"***	Sft.	25.73			

PUNJAB INTERMEDIATE CITIES IMPROVEMENT INVESTMENT PROGRAM (PICIIP)

MISCELLANEOUS CIVIL WORKS FOR PARKING SHEDS AT FREED TOWN SAHIWAL

OFFICE BUILDING (STAFF OFFICE, DRIVER ROOM & TOILETS)
BILL OF QUANTITIES

B-1.1 ARCHITECTUAL AND STRUCTURAL WORKS

Bill No. 2 OFFICE BUILDING (STAFF OFFICE, DRIVER ROOM & TOILETS)

Sr. No	M.R.S 2nd BI-Annual 2021 (Chap/Item)	Description	Unit	Quantity	Rate (Rs.)		Amount (Rs.)
49	RA-13	Providing, fabricating and fixing ***M.S Steel grill*** for windows neat to lines shown on the drawings, specifications and/ or as directed by the Engineer.	Kg.	522.00			
50	RA-80	Recovery of dismentalled works	lumpsum				
Non MRS							
Total (MRS + Non-MRS)							

PUNJAB INTERMEDIATE CITIES IMPROVEMENT INVESTMENT PROGRAM (PICIIP)

MISCELLANEOUS CIVIL WORKS FOR PARKING SHEDS AT FREED TOWN SAHIWAL

GUARD ROOM
BILL OF QUANTITIES

B-1.1 ARCHITECTUAL AND STRUCTURAL WORKS

Bill No. 3 GUARD ROOM

Sr. No	M.R.S 2nd BI-Annual 2021 (Chap/Item)	Description	Unit	Quantity	Rate (Rs.)		Amount (Rs.)
					In Figures	In Words	
1	3/21(b)	Excavation in foundation of building, bridges and other structures, including dagbelling, dressing, refilling around structure with excavated earth, watering and rammiing lead upto one chain (30 m) and lift upto 5 ft. (1.5 m)					
		b) upto 5 ft. (1.5 m)in ordinary soil	Cft	656.90			
2	7/30	Select Fill for specifications see the geotechnical rcommendations					
		*** (Supplying and filling sand under floor or plugging in wells).**	Cft	656.90			
3	26/42	TERMITE CONTROL TREATMENT foundations and floors complete in all respects as shown on the drawings/specifications and/or as directed by the Engineer. (Spraying anti -	Sft	508.20			
4	6/5(h)	Cement concrete plain including placing, compacting, finishing and curing complete (including screening and washing of stone aggregate):					
		(i) 1500 psi Ratio (1:3:6)	Cft	41.09			

PUNJAB INTERMEDIATE CITIES IMPROVEMENT INVESTMENT PROGRAM (PICIIP)

MISCELLANEOUS CIVIL WORKS FOR PARKING SHEDS AT FREED TOWN SAHIWAL

GUARD ROOM
BILL OF QUANTITIES

B-1.1 ARCHITECTUAL AND STRUCTURAL WORKS

Bill No. 3 GUARD ROOM

Sr. No	M.R.S 2nd BI-Annual 2021 (Chap/Item)	Description	Unit	Quantity	Rate (Rs.)		Amount (Rs.)
					In Figures	In Words	
5	6/6(a)(ii)(3)	Providing and laying reinforced cement concrete (including prestressed concrete), using coarse sand and screened graded and washed aggregate, in required shape and design, including forms, moulds, shuttering, lifting, compacting, curing, rendering and finishing exposed surface, complete (but excluding the cost of steel reinforcement, its fabrication and placing in position, etc.):- (a)(ii) Reinforced cement concrete in slab of rafts / strip foundation, base slab of column and retaining walls; etc and other structural members other than those mentioned in 5(a) (i) above not requiring form work (i.e. horizental shuttering) complete in all respects:- 2500psi (Ratio 1:2:4)	Per Cft	115.17			

PUNJAB INTERMEDIATE CITIES IMPROVEMENT INVESTMENT PROGRAM (PICIIP)

MISCELLANEOUS CIVIL WORKS FOR PARKING SHEDS AT FREED TOWN SAHIWAL

GUARD ROOM
BILL OF QUANTITIES

B-1.1 ARCHITECTUAL AND STRUCTURAL WORKS

Bill No. 3 GUARD ROOM

Sr. No	M.R.S 2nd BI-Annual 2021 (Chap/Item)	Description	Unit	Quantity	Rate (Rs.)		Amount (Rs.)
					In Figures	In Words	
	6/6(a)(i)(3)	(a) (i) Reinforced cement concrete in roof slab, beams, columns lintels, girders and other structural members laid in situ or precast laid in position, or prestressed members cast in situ, complete in all respects:- 2500psi (Ratio 1:2:4)	Per Cft	87.56			
6	6/9('c)	Fabrication of mild steel reinforcement for cement concrete, including cutting, bending, laying in position, making joints and fastenings, including cost of binding wire and labour charges for binding of steel reinforcement (also includes removal of rust from bars):- ('c) Deformed bars (Grade-60)	Tons	0.42			
7	7/4(i)	Pacca brick work in foundation and plinth in:- (Plinth protection) i) Cement, sand mortar:- Ratio 1:3	Cft	175.25			
8	6/33(b)(i)	**Damp Proof Course**					

PUNJAB INTERMEDIATE CITIES IMPROVEMENT INVESTMENT PROGRAM (PICIIP)

MISCELLANEOUS CIVIL WORKS FOR PARKING SHEDS AT FREED TOWN SAHIWAL

GUARD ROOM
BILL OF QUANTITIES

B-1.1 ARCHITECTUAL AND STRUCTURAL WORKS

Bill No. 3 GUARD ROOM

Sr. No	M.R.S 2nd BI-Annual 2021 (Chap/Item)	Description	Unit	Quantity	Rate (Rs.)		Amount (Rs.)
					In Figures	In Words	
9	6/35(b)(ii)b	Providing and laying damp proof course (1.5" Thick) of cement concrete 1:2: 4(using cement, sand and shingle), including bitumen coating (2 Coats of Bitumen)	Sft	27.56			
10	3/15 (i)	Providing and laying vertical damp proof course with cement sand plaster (3/4" thick with 1:3 ratio) and bitumen coating (2 Coats of Bitumen)	Sft	73.50			
11	3/17 (a, b,c,d)	Filling, watering and ramming earth under floors:- ***with surplus earth from foundation, etc.***	1000 Cft.	0.10			
12	3/24 (a, b-i)	Transportation of ***Earth all types*** when the total distance including the lead covered in the item of work, is more than 1000 ft.(300 m)	1000 Cft.	0.20			
13	7/30	Compaction of **Earthwork** (soft, ordinary or hard soil) :-	1000 Cft.	0.20			
		Supplying and filling ***sand under floor*** ; or plugging in wells.	100 Cft.	0.30			

PUNJAB INTERMEDIATE CITIES IMPROVEMENT INVESTMENT PROGRAM (PICIIP)

MISCELLANEOUS CIVIL WORKS FOR PARKING SHEDS AT FREED TOWN SAHIWAL

GUARD ROOM
BILL OF QUANTITIES

B-1.1 ARCHITECTUAL AND STRUCTURAL WORKS

Bill No. 3 GUARD ROOM

Sr. No	M.R.S 2nd BI-Annual 2021 (Chap/Item)	Description	Unit	Quantity	Rate (Rs.)		Amount (Rs.)
					In Figures	In Words	
14		**Sub total: Earthwork**					
		Cement **Concrete plain** including placing, compacting, finishing and curing complete (including screening and washing of stone aggregate)					
	6/5 (i)	*Ratio 1:4:8 (under floor.)*	100 Cft.	0.50			
	6/5 (f)	*Ratio 1:2:4 (under floor.)*	100 Cft.	0.10			
		Sub total: Concrete					
		Brickwork.					
15	7/5.(i)	Pacca brick work in ground floor:-:-Cement, sand mortar:-**Ratio 1:5**	100 Cft.	2.00			
		Sub total: Brickwork					
		Roofing.					
16	9/5-9/12	Providing and laying 9" x 4½" x 1½" (225mm x 113mm x 40 mm) **brick tiles** grouted with cement sand 1:3, laid over 4"(100 mm) (average) thick earth with 1" (25 mm) mud plaster without Bhoosaw, grouted with cement sand 1:3 on top of **RCC roof slab**, ***excluding c*** *ost of 34 lbs. per %Sft. or 1.72 Kg/Sq.m bitumen coating sand blinded* **.**					
		First Floor	100 Sft.	1.00			

PUNJAB INTERMEDIATE CITIES IMPROVEMENT INVESTMENT PROGRAM (PICIIP)

MISCELLANEOUS CIVIL WORKS FOR PARKING SHEDS AT FREED TOWN SAHIWAL

GUARD ROOM
BILL OF QUANTITIES

B-1.1 ARCHITECTUAL AND STRUCTURAL WORKS

Bill No. 3 GUARD ROOM

Sr. No	M.R.S 2nd BI-Annual 2021 (Chap/Item)	Description	Unit	Quantity	Rate (Rs.)		Amount (Rs.)
					In Figures	In Words	
17	26/37 (ii)	Supplying and laying **polythene sheet** over D.P.C. under floors and on roofs, etc. *500 gauge*	Sft.	142.00			
18	9/45 (c)	Providing and Laying Insulation material of ***Extruded Polystyrene XPS*** in Rigid Insulation / Foam Board on roof or walls, Density 32-38Kg/M3, compressive strength 250-400 kpa, R-value 5 per inch thickness and water absorption (1% by volume, cell structure colored cell) i/c cutting and placing in position complete in all respect. *2" thick*	100 Sft.	1.00			
19	9/15	Construction of Khuras on roof 2' x 2' x 6"	Each.	1.00			
20	10/15 (e)	**Sub total: Roofing** **Flooring.** Providing and laying **2" thick topping** of cement concrete 1:2:4, including surface finishing and dividing in panels.	100 Sft.	1.00			

PUNJAB INTERMEDIATE CITIES IMPROVEMENT INVESTMENT PROGRAM (PICIIP)

MISCELLANEOUS CIVIL WORKS FOR PARKING SHEDS AT FREED TOWN SAHIWAL

GUARD ROOM
BILL OF QUANTITIES

B-1.1 ARCHITECTUAL AND STRUCTURAL WORKS

Bill No. 3 GUARD ROOM

Sr. No	M.R.S 2nd BI-Annual 2021 (Chap/Item)	Description	Unit	Quantity	Rate (Rs.)		Amount (Rs.)
					In Figures	In Words	
21	10/42 (a)	Providing and fixing size 1½" x 3/8" (40 x 10 mm) **marble strip** of any shade for dividing the mosaic flooring into panels.	Rft.	53.00			
		Sub total: Flooring					
		Surface Rendering.					
22	11/10 (b)	Cement plaster ratio 1:3 under **soffit of R.C.C. roof slabs** only, upto 20' height. 3/8" (10 mm) thick.	100 Sft.	1.00			
23	11/9 (b)	Cement plaster 1:4 on **internal walls** upto 20' (6.00 m) height and ½" (13 mm) thick.	100 Sft.	2.00			
24	11/9 (c)	Cement plaster 1:4 on **internal walls** upto 20' (6.00 m) height and ¾" (20 mm) thick.	100 Sft.	1.00			
25	11/9 (c)	Cement plaster 1:4 on ***external walls*** upto 20' (6.00 m) height and ¾" (20 mm) thick.	100 Sft.	2.00			
26	11/18 (a)	Cement ***pointing struck joints*** , on walls, upto 20' (6.00 m) hiehgt:- ***ratio 1:2***	100 Sft.	4.00			
		Sub total: Surface Rendering					
		Wood Work.					
27	13/31	**Painting & Varnishing.**					

PUNJAB INTERMEDIATE CITIES IMPROVEMENT INVESTMENT PROGRAM (PICIIP)

MISCELLANEOUS CIVIL WORKS FOR PARKING SHEDS AT FREED TOWN SAHIWAL

GUARD ROOM
BILL OF QUANTITIES

B-1.1 ARCHITECTUAL AND STRUCTURAL WORKS

Bill No. 3 GUARD ROOM

Sr. No	M.R.S 2nd BI-Annual 2021 (Chap/Item)	Description	Unit	Quantity	Rate (Rs.)		Amount (Rs.)
					In Figures	In Words	
		Preparing surface and painting with three (03) coats **Emulsion paint** complete in all respect.	100 Sft.	4.00			
28	13/32A	Providing and applying **weather shield paint** of approved quality on external surface of building including preparation of surface, application of primer complete in all respect: ***(02-Coats)***	100 Sft.	2.00			
29		**Sub total: Painting & Varnishing Iron Work.**					

PUNJAB INTERMEDIATE CITIES IMPROVEMENT INVESTMENT PROGRAM (PICIIP)

MISCELLANEOUS CIVIL WORKS FOR PARKING SHEDS AT FREED TOWN SAHIWAL

GUARD ROOM
BILL OF QUANTITIES

B-1.1 ARCHITECTUAL AND STRUCTURAL WORKS

Bill No. 3 GUARD ROOM

Sr. No	M.R.S 2nd BI-Annual 2021 (Chap/Item)	Description	Unit	Quantity	Rate (Rs.)		Amount (Rs.)
					In Figures	In Words	
	25/52+ 25/53	Providing and fixing all types of glazed **aluminium window**s of anodized champagne colour partly fixed and party sliding using deluxe section of approved manufacturer having Frame of size100 mm x 30 mm using frame at bottom, at topand side leaf leaf frame sections of 60mm x 23mm at top & bottom and size 45mm x 25mm at centerand size 45mm x 25mm at sides, Jali leaf frame size 43mm x 13mm i/c fine quality aluminium jali, 5mm thick imported tinted glass with rubber gasket using approved standard latches, wheel, stopper, brush channel angle joint and hardware etc. complete in all respect. (2 mm thick)	Sft.	34.00			
MRS Total for Two Guard Room							

PUNJAB INTERMEDIATE CITIES IMPROVEMENT INVESTMENT PROGRAM (PICIIP)

MISCELLANEOUS CIVIL WORKS FOR PARKING SHEDS AT FREED TOWN SAHIWAL

GUARD ROOM
BILL OF QUANTITIES

B-1.1 ARCHITECTUAL AND STRUCTURAL WORKS

Bill No. 3 GUARD ROOM

Sr. No	M.R.S 2nd BI-Annual 2021 (Chap/Item)	Description	Unit	Quantity	Rate (Rs.)		Amount (Rs.)
					In Figures	In Words	
II	**NON MRS ITEMS**						
30	RA-02	Provide and apply 2-coats of ***cold applied rubberized bitumen*** of approved manufacture's @ 1kg/m²/coat over 0.75kg/m² primer coat (mixed with 6% water) respectively, over well prepared surfaces complete in all respects and /or as directed by the Engineer in charge.	Sft.	71.00			
		Flooring.					
31	RA-05	Providing and laying ***12"x12"x¾" thick China Verona*** Marble of approved quality, colour, shade and texture, on ***floor*** laid over ¾" thick bedding of cement sand mortar 1:2, including grinding and chemical polishing, jointed and grouted with white cement mixed with imported matching colour pigment, complete in all respect as shown on the drawings and/or as directed by the Engineer.	Sft.	69.00			

PUNJAB INTERMEDIATE CITIES IMPROVEMENT INVESTMENT PROGRAM (PICIIP)

MISCELLANEOUS CIVIL WORKS FOR PARKING SHEDS AT FREED TOWN SAHIWAL

GUARD ROOM
BILL OF QUANTITIES

B-1.1 ARCHITECTUAL AND STRUCTURAL WORKS

Bill No. 3 GUARD ROOM

Sr. No	M.R.S 2nd BI-Annual 2021 (Chap/Item)	Description	Unit	Quantity	Rate (Rs.)		Amount (Rs.)
					In Figures	In Words	
32	RA-06	Providing and fixing of ***12"x4"x½" Skirting China Verona Marble*** , set with neat cement paste over ¾" thick 1:2 cement sand base plaster, including grinding and chemical polishing, jointed and grouted with white cement mixed with pigment. complete in all respects as per the approval of the Engineer.	Sft.	8.00			
33	RA-07	Providing and laying **pre-polished China Verona Slab** ¾" thick (single piece) of approved quality, colour, shade and texture for ***stair treads*** set over ¾"	Sft.	9.00			
34	RA-08	Providing and laying ½" thick pre polished ***China Verona Slab*** of approved quality, colour, shade and texture for ***stair risers*** laid over ¾" thick 1:2 cement sand mortar, complete in all respect as shown on the drawings and/or as directed by the Engineer.	Sft.	5.00			

PUNJAB INTERMEDIATE CITIES IMPROVEMENT INVESTMENT PROGRAM (PICIIP)

MISCELLANEOUS CIVIL WORKS FOR PARKING SHEDS AT FREED TOWN SAHIWAL

GUARD ROOM
BILL OF QUANTITIES

B-1.1 ARCHITECTUAL AND STRUCTURAL WORKS

Bill No. 3 GUARD ROOM

Sr. No	M.R.S 2nd BI-Annual 2021 (Chap/Item)	Description	Unit	Quantity	Rate (Rs.)		Amount (Rs.)
					In Figures	In Words	
35	RA-10	Providing and fixing ***Diamond Mesh (24 SWG)*** , with concrete nails at location of concrete interfacing masonry complete in all respect as shown on the drawings, and/ or as directed by the Engineer.	Sft.	32.00			
36	RA-13	Providing, fabricating and fixing ***M.S Steel grill*** for windows neat to lines shown on the drawings, specifications and/ or as directed by the Engineer.	Kg.	92.00			
37	RA-14	Providing and fixing of 16 SWG M.S. Sheet panel door comprising of M.S frame & shutter (factory primmed) welded with 1½"x1½"x¼" M.S angle frame, i/c locking arrangement, eryls, hinges, enamel painting etc. complete in all respects as per drawings and specifications and/or as directed by the Engineer.	Sft.	18.00			
Non MRS for Two Guard Room							
Total (MRS + Non-MRS) for Two Guard Room							

PUNJAB INTERMEDIATE CITIES IMPROVEMENT INVESTMENT PROGRAM (PICIIP)

MISCELLANEOUS CIVIL WORKS FOR PARKING SHEDS AT FREED TOWN SAHIWAL

ENTRY GATE
BILL OF QUANTITIES

B-1.1 ARCHITECTUAL AND STRUCTURAL WORKS

Bill No. 4 ENTRY GATE

Item No.	Ref. MRS, 2nd Bi-Annual 2021 Chap. / Item No	Description	Unit	Quantity	Rate (Rs.)		Amount (Rs.)
					In Figures	In Words	
I		**MRS ITEMS**					
		Surface Rendering.					
1	11/9 (c)	Cement plaster 1:4 on ***external walls*** upto 20' (6.00 m) height and ¾" (20 mm) thick.	100 Sft.	2.00			
		Painting & Varnishing.					
2	13/5 (d)	Preparing surface and painting guard bars, ***gates of iron bars, gratings, railing*** (including standards,braces, etc.) and in similar open work:- (***03-Coats)***	100 Sft.	2.00			
3	13/32A	Providing and applying **weather shield paint** of approved quality on external surface of building including preparation of surface, application of primer complete in all respect: ***(02-Coats)***	100 Sft.	2.00			
		Iron Work.					
4	25/9, 25/11	Small ***iron work***, such as gusset plates, knees, bends,stirrups, straps, rings, etc. including cutting, drilling,riveting, handling, assembling and fixing; including erection in position.	100 Kg.	6.00			
		TOTAL MRS ITEMS					
		TOTAL FOR 03-NOS ENT GATES					

PUNJAB INTERMEDIATE CITIES IMPROVEMENT INVESTMENT PROGRAM (PICIIP)

MISCELLANEOUS CIVIL WORKS FOR PARKING SHEDS AT FAREED TOWN SAHIWAL

PRE-ENGINEERED PARKING SHED BUTTERFLY STYLE

BILL OF QUANTITIES

B - 1.1 ARCHITECTUAL AND STRUCTURAL WORKS

Bill No. 5 Cost of prefabricated Steel Structre, Sahiwal

Sr. No	M.R.S 2nd BI-Annual 2021 (Chap/Item)	Description	Unit	Quantity	Rate (Rs.)		Amount (Rs.)
					In Figures	In Words	
1	RA-100	Supply, installation and transportation of pre-engineered steel building including steel coloumn (column web size 525 x 5 & column flange size 200 x 10), Rafter (Rafter web size 525 x 300 x 4 & Rafter flange size 175 x 8), Roof Purlins (Purlin section size 60 x 200 x 1.5), 0.5 thick pre-painted sheet at roof area and nut bolt etc complete in all respect. (32'-0" x 30'-0" x 15'-0" clear height) All dimesion are in mm unless otherwise specified.	Sft	960.00			

PUNJAB INTERMEDIATE CITIES IMPROVEMENT INVESTMENT PROGRAM (PICIIP)

MISCELLANEOUS CIVIL WORKS FOR PARKING SHEDS AT FAREED TOWN SAHIWAL

PRE-ENGINEERED PARKING SHED BUTTERFLY STYLE

BILL OF QUANTITIES

B - 1.1 ARCHITECTUAL AND STRUCTURAL WORKS

Bill No. 5 Cost of prefabricated Steel Structre, Sahiwal

Sr. No	M.R.S 2nd BI-Annual 2021 (Chap/Item)	Description	Unit	Quantity	Rate (Rs.)		Amount (Rs.)
2	RA-101	Supply, installation and transportation of pre-engineered steel building including steel coloumn (column web size 525 x 5 & column flange size 200 x10), Rafter (Rafter web size 525 x300 x 4 & Rafter flange size 175 x 8), Roof Purlins (Purlin section size 60 x 200 x 1.5), 0.5 thick pre-painted sheet at roof area and nut bolt etc complete in all respect. (32'-0" x 75'-0" x 15'-0" clear height) All dimesion are in mm unless otherwise specified.	Sft	2,400.00			
3	RA-102	Supply, installation and transportation of pre-engineered steel building including steel coloumn (column web size 525 x5 & column flange size 200 x 10), Rafter (Rafter web size 525 x 300 x 4 & Rafter flange size 175 x 8), Roof Purlins (Purlin section size 60 x 200 x 1.5mm), 0.5 mm thick pre-painted sheet at roof area and nut bolt etc complete in all respect. (32'-0" x165'-0" x 15'-0" clear height)	Sft	5,280.00			

PUNJAB INTERMEDIATE CITIES IMPROVEMENT INVESTMENT PROGRAM (PICIIP)

MISCELLANEOUS CIVIL WORKS FOR PARKING SHEDS AT FAREED TOWN SAHIWAL

PRE-ENGINEERED PARKING SHED BUTTERFLY STYLE

BILL OF QUANTITIES

B - 1.1 ARCHITECTUAL AND STRUCTURAL WORKS

Bill No. 5 Cost of prefabricated Steel Structre, Sahiwal

Sr. No	M.R.S 2nd BI-Annual 2021 (Chap/Item)	Description	Unit	Quantity	Rate (Rs.)		Amount (Rs.)
4	RA-103	Supply, installation and transportation of pre-engineered steel building including steel coloumn (column web size 450 x 4 & column flange size 175 x 8), Rafter (Rafter web size 450 x 250 x 4 & Rafter flange size 150 x 6), Roof Purlins (Purlin section size 60 x 200 x 1.5mm), 0.5 mm thick pre-painted sheet at roof area and nut bolt etc complete in all respect. (25'-0" x 168'-0" x 15'-0" clear height) All dimesion are in mm unless otherwise specified.	Sft	4,200.00			
5	RA-104	Supply, installation and transportation of pre-engineered steel building including steel coloumn (column web size 350 x 4 & column flange size 150 x 6), Rafter (Rafter web size 350 x 200 x 4 & Rafter flange size 150 x 6), Roof Purlins (Purlin section size 60 x 200 x 1.5), 0.5 thick pre-painted sheet at roof area and nut bolt etc complete in all respect. (16'-0" x 96'-0" x 10'-0" clear height) All dimesion are in mm unless otherwise specified.	Sft	1,536.00			
		TOTAL NON-MRS ITEMS					

PUNJAB INTERMEDIATE CITIES IMPROVEMENT INVESTMENT PROGRAM (PICIIP)

MISCELLANEOUS CIVIL WORKS FOR PARKING SHEDS AT FREED TOWN SAHIWAL

PARKING SHEDS PADESTAL
BILL OF QUANTITIES

B-1.1 ARCHITECTUAL AND STRUCTURAL WORKS

Bill No. 6 PARKING SHEDS PADESTAL

Sr. No	M.R.S 2nd BI-Annual 2021 (Chap/Item)	Description	Unit	Quantity	Rate (Rs.)		Amount (Rs.)
					In Figures	In Words	
1	3/21(b)	Excavation in foundation of building, bridges and other structures, including dagbelling, dressing, refilling around structure with excavated earth, watering and rammiing lead upto one chain (30 m) and lift upto 5 ft. (1.5 m) b) upto 5 ft. (1.5 m)in ordinary soil	Cft	8285.29			
2	7/30	Select Fill for specifications see the geotechnical rcommendations * Supplying and filling sand under floor; or plugging in wells.	SFT	11967.64			
3	6/5(h)	Cement concrete plain including placing, compacting, finishing and curing complete (including screening and washing of stone aggregate): (i) 1500 psi Ratio (1:3:6)	Cft	1,094.40			

PUNJAB INTERMEDIATE CITIES IMPROVEMENT INVESTMENT PROGRAM (PICIIP)

MISCELLANEOUS CIVIL WORKS FOR PARKING SHEDS AT FREED TOWN SAHIWAL

PARKING SHEDS PADESTAL
BILL OF QUANTITIES

B-1.1 ARCHITECTUAL AND STRUCTURAL WORKS

Bill No. 6 PARKING SHEDS PADESTAL

Sr. No	M.R.S 2nd BI-Annual 2021 (Chap/Item)	Description	Unit	Quantity	Rate (Rs.)		Amount (Rs.)
					In Figures	In Words	
4	6/6(a)(ii)(3)	Providing and laying reinforced cement concrete (including prestressed concrete), using coarse sand and screened graded and washed aggregate, in required shape and design, including forms, moulds, shuttering, lifting, compacting, curing, rendering and finishing exposed surface, complete (but excluding the cost of steel reinforcement, its fabrication and placing in position, etc.):-					
		(a)(ii) Reinforced cement concrete in slab of rafts / strip foundation, base slab of column and retaining walls; etc and other structural members other than those mentioned in 5(a) (i) above not requiring form work (i.e. horizental shuttering) complete in all respects:- 3000psi (Ratio 1:1.5:3)	Per Cft	5,346.75			
	6/6(a)(i)(2)	(a) (i) Reinforced cement concrete in roof slab, beams, columns lintels, girders and other structural members laid in situ or precast laid in position, or prestressed members cast in situ, complete in all respects:- 3000psi (Ratio 1:1.5:3)	Per Cft	907.28			

PUNJAB INTERMEDIATE CITIES IMPROVEMENT INVESTMENT PROGRAM (PICIIP)

MISCELLANEOUS CIVIL WORKS FOR PARKING SHEDS AT FREED TOWN SAHIWAL

PARKING SHEDS PADESTAL
BILL OF QUANTITIES

B-1.1 ARCHITECTUAL AND STRUCTURAL WORKS

Bill No. 6 PARKING SHEDS PADESTAL

Sr. No	M.R.S 2nd BI-Annual 2021 (Chap/Item)	Description	Unit	Quantity	Rate (Rs.)		Amount (Rs.)
					In Figures	In Words	
5	6/9('c)	Fabrication of mild steel reinforcement for cement concrete, including cutting, bending, laying in position, making joints and fastenings, including cost of binding wire and labour charges for binding of steel reinforcement (also includes removal of rust from bars):- ('c) Deformed bars (Grade-60)	Tons	20.29			
TOTAL MRS ITEMS							

PUNJAB INTERMEDIATE CITIES IMPROVEMENT INVESTMENT PROGRAM (PICIIP)

MISCELLANEOUS CIVIL WORKS FOR PARKING SHEDS AT FREED TOWN SAHIWAL

DRAIN

BILL OF QUANTITIES

B-1.1 ARCHITECTUAL AND STRUCTURAL WORKS

Bill No. 7 DRAIN

Sr. No	M.R.S 2nd BI-Annual 2021 (Chap/Item)	Description	Unit	Quantity	Rate (Rs.)		Amount (Rs)
					In Figures	In Words	
1	3/41	Select Fill for specifications will be reffered by geotechnical division ***(Supplying clean and screened river or pit sand within 5chains (150 m).**	Cft	9776.81			
2	6/5(h)	Cement concrete plain including placing, compacting, finishing and curing complete (including screening and washing of stone aggregate): (i) 1500 psi Ratio (1:3:6)	Cft	626.72			
3	6/6(a)(ii)(2)	Providing and laying reinforced cement concrete (including prestressed concrete), using coarse sand and screened graded and washed aggregate, in required shape and design, including forms, moulds, shuttering, lifting, compacting, curing, rendering and finishing exposed surface, complete (but excluding the cost of steel reinforcement, its fabrication and placing in position, etc.):-					

PUNJAB INTERMEDIATE CITIES IMPROVEMENT INVESTMENT PROGRAM (PICIIP)

MISCELLANEOUS CIVIL WORKS FOR PARKING SHEDS AT FREED TOWN SAHIWAL

DRAIN

BILL OF QUANTITIES

B-1.1 ARCHITECTUAL AND STRUCTURAL WORKS

Bill No. 7 DRAIN

Sr. No	M.R.S 2nd BI-Annual 2021 (Chap/Item)	Description	Unit	Quantity	Rate (Rs.)		Amount (Rs)
		(a)(ii) Reinforced cement concrete in slab of rafts / strip foundation, base slab of column and retaining walls; etc and other structural members other than those mentioned in 5(a) (i) above not requiring form work (i.e. horizental shuttering) complete in all respects:-					
		3000psi	Per Cft	1337.00			
4		(a) (i) Reinforced cement concrete in roof slab, beams, columns lintels, girders and other structural members laid in situ or precast laid in position, or prestressed members cast in situ, complete in all respects:-					
	6/6(a)(i)(2)	3000psi	Per Cft	4011.00			
5	6/9('c)	Fabrication of mild steel reinforcement for cement concrete, including cutting, bending, laying in position, making joints and fastenings, including cost of binding wire and labour charges for binding of steel reinforcement (also includes removal of rust from bars):-					
		('c) Deformed bars (Grade-60)	Tons	14.56			

PUNJAB INTERMEDIATE CITIES IMPROVEMENT INVESTMENT PROGRAM (PICIIP)

MISCELLANEOUS CIVIL WORKS FOR PARKING SHEDS AT FREED TOWN SAHIWAL DRAIN

BILL OF QUANTITIES

B-1.1 ARCHITECTUAL AND STRUCTURAL WORKS

Bill No. 7 DRAIN

Sr. No	M.R.S 2nd BI-Annual 2021 (Chap/Item)	Description	Unit	Quantity	Rate (Rs.)		Amount (Rs)
6	6/28	Providing embeding 10" (250 mm) wide ¼" (6 mm) thick rubber water stopper in expansion joints of R.C.C. roof slab complete in all respect	ft	2005.50			
7	22/9	Providing and fixing tructural Steel angle section 2.5x2.5x1/4"	Kg	546.28			
8	25 / 32	Making and fixing grating in opening, including fixing at site with flat iron 2"x3/8" (50x10 mm) and 3/4" (19 mm) square bars, at 4" (100 mm) centre to centre.	Sft	1910.00			
9	13/9(i)	Bitumen coating to plastered or cement concrete surface:- rate is multily by 2 for two coats i)20 lbs. per 100 Sft. (9.07 Kg per Sq.m)	Sft	7353.50			
Total Amount							

PUNJAB INTERMEDIATE CITIES IMPROVEMENT INVESTMENT PROGRAM (PICIIP)

ELECTRIFICATION WORKS FOR PARKING SHEDS AT FAREED TOWN SAHIWAL
ELECTRIFICATION WORKS
BILL OF QUANTITIES

B-1.2 ELECTRIFICATION WORKS

Sr. No.	M.R.S 2nd BI-Annual 2021 (Chap/Item)	Description	Unit	Qty.	Rate (Rs.)		Amount (Rs.)
					In Figures	In Words	
1.0		**WIRING AND ACCESSORIES**					
1.1	10(a-ii)/24, 3(iii)/24, 14(i)/24, 32(ii)/24	Wiring of light or fan point from switch board/dimmer to the point with 3x1.5 mm^2 (P+N+E) PVC insulated single core stranded cables in 25 mm PVC conduit/pipe concealed in walls, columns and slabs including accessories, PVC box, 10 Amp. gang switch 1 or 2 way as required, one for each light or fan and installed as in specifications complete in all respects.	Each	58			
1.2	10(a-iii)/24, 3(iii)/24	Circuit wiring from DB MCBs to gang switches board and from switch board to another switch board with 3x2.5 mm^2 (P+N+E) PVC insulated single core stranded cables in 25mm PVC pipe/conduit concealed in walls, columns and slabs as required complete in all respects.	Each	16			
1.3	10(a-ii)/24, 3(iii)/24	The same as item No. 1.1(a) but from one light point to another light point.	Each	36			
1.4	10(a-iv)/24, 14(ii)/24, 36(i)/24, 3(iii)/24	10/13 Amp 3 pin universal flush mounting switch socket outlet wired from DB MCBs to first outlet with 3x4 mm^2 (P+N+E) single core cable stranded (away from switch board) in 25mm PVC pipe/conduit concealed in walls, columns and slabs as required complete in all respects.	Each	7			

PUNJAB INTERMEDIATE CITIES IMPROVEMENT INVESTMENT PROGRAM (PICIIP)

ELECTRIFICATION WORKS FOR PARKING SHEDS AT FAREED TOWN SAHIWAL
ELECTRIFICATION WORKS
BILL OF QUANTITIES

B-1.2 ELECTRIFICATION WORKS

Sr. No.	M.R.S 2nd BI-Annual 2021 (Chap/Item)	Description	Unit	Qty.	Rate (Rs.)		Amount (Rs.)
1.5	10(a-iii)/24, 3(iii)/24	The same as item No.1.4 but wiring from one socket outlet to another socket outlet with 3x2.5 mm^2 (P+N+E) single core stranded cable in 25mm PVC pipe/conduit concealed in walls, columns and slabs as required complete in all respects.	Each	11			
1.6	10(a-v)/24, 3(iii)/24, 36(ii)/24, 14(ii)/24	20 Amp 3 pin universal flush mounting switch socket outlet wired from DB MCBs to independent socket outlet with 3x6 mm^2 (P+N+E) single core stranded cable (away from switchboard) in 25mm PVC pipe/conduit concealed in walls, columns and slabs as required complete in all respects.	Each	8			
		TOTAL MRS					

PUNJAB INTERMEDIATE CITIES IMPROVEMENT INVESTMENT PROGRAM (PICIIP)

ELECTRIFICATION WORKS FOR PARKING SHEDS AT FAREED TOWN SAHIWAL
ELECTRIFICATION WORKS
BILL OF QUANTITIES

B-1.2 ELECTRIFICATION WORKS

Sr. No.	M.R.S 2nd BI-Annual 2021 (Chap/Item)	Description	Qty.	Unit	Rate (Rs.)		Amount (Rs.)
					In Figures	In Words	
		The Electrical Works include design, supply, transportation, installation, testing and commissioning of the following items of works as mentioned in this BOQ (unless specifically stated otherwise) including all material, labour, tools, accessories, related civil works, etc., as required for proper completion of each item as per specifications unless otherwise mentioned. (Any necessary material not mentioned in specifications, electrical drawings and here in this BOQ required for proper installation, testing and commissioning of equipment and materials shall be included in BOQ rates. Bid price shall be final. No Separate payment will be made for any such material. The Contractor shall be bond to provided any such material after award of this contract for proper completion of the Electrical Installation Works.) Contractor is also advised to inform missing items (if any) in BoQ at time submitting the tender.					

PUNJAB INTERMEDIATE CITIES IMPROVEMENT INVESTMENT PROGRAM (PICIIP)

ELECTRIFICATION WORKS FOR PARKING SHEDS AT FAREED TOWN SAHIWAL
ELECTRIFICATION WORKS
BILL OF QUANTITIES

B-1.2 ELECTRIFICATION WORKS

Sr. No.	M.R.S 2nd BI-Annual 2021 (Chap/Item)	Description	Qty.	Unit	Rate (Rs.)		Amount (Rs.)
					In Figures	In Words	
		Supply, transportaion, storage at site, installation, testing and commissioning of the following items of work (unless specifically stated otherwise) including all material, labour, tools, accessories, etc. required for proper completion of each item as per specifications unless otherwise mentioned. (Any necessary material not mentioned in specifications, electrical drawings and here in this BOQ required for proper installation, testing and commissioning of equipment and materials shall be included in BOQ rates.					
1(A)		**<u>POWER CABLE</u>**					
1.1(A)		Copper conductor PVC/PVC 600/1000V cables including sockets and connections at both ends with Cu/Brass glands, lugs ets alongwith all accessories. The cable shall be drawn in cable trench or clipped on the wall or pulled in cable tray/PVC pipes or as required or as shown on drawings. (Imported copper shall be used. Verified documentary evidence for source of copper & PVC shall be furnished prior to manufacturing)					
a)	RA-15	2 core 10 mm^2 (For Security Guard Room)	450	Rft.			

PUNJAB INTERMEDIATE CITIES IMPROVEMENT INVESTMENT PROGRAM (PICIIP)

ELECTRIFICATION WORKS FOR PARKING SHEDS AT FAREED TOWN SAHIWAL
ELECTRIFICATION WORKS
BILL OF QUANTITIES

B-1.2 ELECTRIFICATION WORKS

Sr. No.	M.R.S 2nd BI-Annual 2021 (Chap/Item)	Description	Qty.	Unit	Rate (Rs.)		Amount (Rs.)
					In Figures	In Words	
b)	RA-16	4 core 10 mm^2 (For Area Lighting)	4,500	Rft.			
c)	RA-17	4 core 25 mm^2 From MPB to DB-Office Building	90	Rft.			
d)	RA-18	4 core 50 mm^2 From Transformer to MPB	400	Rft.			
1.2(A)		PVC insulated 450/750 Volt grade (Green - Yellow) unarmoured copper cable laid direct in ground, pulled in PVC pipe already laid, on surface of wall or cable trays etc. sockets and connections at both ends with Cu/Brass, glands, lugs ets alongwith all accessories all accessories as required or as shown on drawings (Imported copper shall be used. Verified documentary evidence for source of copper & PVC shall be furnished prior to manufacturing) as earth continuity conductor (ECC/CPC).					
a)	RA-19	1 core 10 mm^2	4,950	Rft.			
b)	RA-20	1 core 16 mm^2	90	Rft.			
c)	RA-21	1 core 25 mm^2	600	Rft.			
2.0		**<u>LIGHT FITTINGS AND FANS</u>**					

PUNJAB INTERMEDIATE CITIES IMPROVEMENT INVESTMENT PROGRAM (PICIIP)

ELECTRIFICATION WORKS FOR PARKING SHEDS AT FAREED TOWN SAHIWAL
ELECTRIFICATION WORKS
BILL OF QUANTITIES

B-1.2 ELECTRIFICATION WORKS

Sr. No.	M.R.S 2nd BI-Annual 2021 (Chap/Item)	Description	Qty.	Unit	Rate (Rs.)		Amount (Rs.)
					In Figures	In Words	
2.1		Following LED Luminaries of suitable wattage make Philips, GE, Pierlite or approved equivalent suitable for the project requirements. Contractor to submit lighting design calculation to determine the adequacy					
a)	RA-22	Light Fixture Type LED Batten Ceiling/Wall/surface mounted mounted, 18W complete in all respect with allied accessories. The fitting shall be approved by the Engineer.	13	Each			
b)	RA-23	Light Fixture Type LED Batten Wall/surface mounted, 10W above mirror in toilets complete in all respect with allied accessories.	9	Each			
c)	RA-24	20W LED Water tight light fixture IP 65 complete in all respect with all allied accessories or approved equivalent. The fitting	8	Each			
d)	RA-25	Light Fixture Type LED Ceiling/surface mountedsurface mounted down lighter, 18W complete in all respect with allied accessories. The fitting shall be approved by the Engineer.	32	Each			

PUNJAB INTERMEDIATE CITIES IMPROVEMENT INVESTMENT PROGRAM (PICIIP)

ELECTRIFICATION WORKS FOR PARKING SHEDS AT FAREED TOWN SAHIWAL
ELECTRIFICATION WORKS
BILL OF QUANTITIES

B-1.2 ELECTRIFICATION WORKS

Sr. No.	M.R.S 2nd BI-Annual 2021 (Chap/Item)	Description	Qty.	Unit	Rate (Rs.)		Amount (Rs.)
					In Figures	In Words	
e)	RA-26	Wall bracket Light Fixture Type LED 18W energy saving lamp with holder and complete in all respect with allied accessories. The fitting shall be approved by the Engineer.	9	Each			
f)	RA-27	56" ceiling fan sweep (Climax, Pak, Millat) make or approved equivalent.	6	Each			
g)	RA-28	Wall bracket fan 20" sweep make (Royal, Pak, Millat or approved equivalent) capacitor type, copper winding complete with all accessories	4	Each			
h)	RA-29	Exhaust fan 12" sweep make (Royal, Pak, Millat or approved equivalent) capacitor type, copper winding complete with Plastic body and all accessories etc.	7	Each			
3.0		**POLES & ACCESSORIES**					
a)	RA-30	10 m high single arm conical octagonal (hot dip) galvanized steel pole with extension arm luminaire arrangement, base plate, 2 Amp. SP MCB, (RC=10KA) circuit breaker, 05 Nos. Terminal block including end caps, base connection plates & end stopper etc. as shown on drawing.	9	Each			

PUNJAB INTERMEDIATE CITIES IMPROVEMENT INVESTMENT PROGRAM (PICIIP)

ELECTRIFICATION WORKS FOR PARKING SHEDS AT FAREED TOWN SAHIWAL
ELECTRIFICATION WORKS
BILL OF QUANTITIES

B-1.2 ELECTRIFICATION WORKS

Sr. No.	M.R.S 2nd BI-Annual 2021 (Chap/Item)	Description	Qty.	Unit	Rate (Rs.)		Amount (Rs.)
					In Figures	In Words	
b)	RA-31	Road Lighting Pole Foundation (Bitchmen Coating)	9	Each			
c)		Road Lighting LED Luminaries 90 Watt make Philips, GE, or approved equivalent, fully in compliance with the specified requirements suitable for the project requirements, fully IP 66 with corrosion resistant die cast aluminum housing, silicon gas kit, thermally hardened glass complete with LED drivers, surge protection and all accessories/ components required for the proper operation of the system. The luminaries shall be fully flexible for future upgrades and easy replacements for maintenance purposes. Contractor to submit lighting design calculation to determine the adequacy of the wattage and should adjust the number of LEDs/wattage as per project lighting requirements.	9	Each			
d)	RA-32	LED Luminaries Flood lights Tango LED 30W or approved equivalent fully IP 65 with corrosion resistant die cast aluminum housing, silicon gas kit, thermally hardened glass	15	Each			

PUNJAB INTERMEDIATE CITIES IMPROVEMENT INVESTMENT PROGRAM (PICIIP)

ELECTRIFICATION WORKS FOR PARKING SHEDS AT FAREED TOWN SAHIWAL
ELECTRIFICATION WORKS
BILL OF QUANTITIES

B-1.2 ELECTRIFICATION WORKS

Sr. No.	M.R.S 2nd BI-Annual 2021 (Chap/Item)	Description	Qty.	Unit	Rate (Rs.)		Amount (Rs.)
					In Figures	In Words	
e)	RA-33	PVC Junction box size 08"x06"x04" (for Flood Light connection) with frame claded 16 SWG, having high quality powder coated paint, color RAL 7032. suitable for connections with IP44 protection class, door, locking arrangement etc. and all other accessories as required for quality work.	15	Each			
-		Junction box size 08"x06"x04" (for Flood Light connection)					
-		01 No. 2 Amp. SP MCB, 6 kA					
-		05 Nos. Terminal block alongwith all accessories etc.,					
f)		3 Nos. 1 core 2.5 mm^2 Cu/PVC 450/750 Voltage grade cable (stranded conductor) (Imported copper shall be used. Verified documentary evidence for source of copper & PVC shall be furnished prior to manufacturing)					
-	RA-34	40 ft. cable is required for each pole and the unit is taken as No. Price per No.	9	Each			

PUNJAB INTERMEDIATE CITIES IMPROVEMENT INVESTMENT PROGRAM (PICIIP)

ELECTRIFICATION WORKS FOR PARKING SHEDS AT FAREED TOWN SAHIWAL
ELECTRIFICATION WORKS
BILL OF QUANTITIES

B-1.2 ELECTRIFICATION WORKS

Sr. No.	M.R.S 2nd BI-Annual 2021 (Chap/Item)	Description	Qty.	Unit	Rate (Rs.)		Amount (Rs.)
					In Figures	In Words	
g)	RA-35	Locally manufactured decorative gate light with 100W LED complete in all respect with allied accessories make Philips, GE, Pierlite or approved equivalent. The fitting shall be approved by the Engineer.	4	Each			
4.0		**uPVC PIPE**					
4.1		PVC pipe conduit with accessories suitable for laying single/multi-core cables.					
a)	RA-36	50 mm dia (Class-D)	1,400	Rft.			
b)	RA-37	100 mm dia (Class-B)	1,450	Rft.			
c)	RA-38	100 mm dia (Class-D)	700	Rft.			
5.0		**DISTRIBUTION BOARDS**					
5.1		D.Bs with TP incoming adjustable moulded case circuit breaker and SP miniature outgoing circuit breakers, Panel box SWG 16 powder coated RAL colour 7032, IP class 44/ 54 and with all accessories. alongwith all installation and operational accessories as per specification or as shown on the drawings.					

PUNJAB INTERMEDIATE CITIES IMPROVEMENT INVESTMENT PROGRAM (PICIIP)

ELECTRIFICATION WORKS FOR PARKING SHEDS AT FAREED TOWN SAHIWAL
ELECTRIFICATION WORKS
BILL OF QUANTITIES

B-1.2 ELECTRIFICATION WORKS

Sr. No.	M.R.S 2nd BI-Annual 2021 (Chap/Item)	Description	Qty.	Unit	Rate (Rs.)		Amount (Rs.)
					In Figures	In Words	
(a)		**DB- Office Building**					
	RA-39	**MATERIAL** 01 No. 50 Amps (Adj.) MCCB TP, RC=25kA, Icu=100%Ics 08 Nos. outgoing 10A, MCB, SP, RC=10 kA, Icu=100%Ics 07 Nos.outgoing 20A, MCB, SP, RC=10 kA, Icu=100%Ics 03 Nos. Spare 10/20A, MCB, SP, RC=10 kA, Icu=100%Ics 03 Nos. Space for 10/20A, MCB Indication lights, push buttons, digital ammeter with selector switch, digital voltmeter with selector switch, Panel box SWG 16 powder coated RAL colour 7032, P class 44/ 54 and with all accessories.	1	No.			
b)		**DB- Work Shop**					
	RA-40	**MATERIAL** 01 No. 25 Amps (Adj.) MCCB TP, RC=18kA, Icu=100%Ics 01 No. 16 Amps (Adj.) MCCB TP, RC=18kA, Icu=100%Ics 02 Nos. outgoing 10A, MCB, SP, RC=10 kA, Icu=100%Ics	1	No.			

PUNJAB INTERMEDIATE CITIES IMPROVEMENT INVESTMENT PROGRAM (PICIIP)

ELECTRIFICATION WORKS FOR PARKING SHEDS AT FAREED TOWN SAHIWAL
ELECTRIFICATION WORKS
BILL OF QUANTITIES

B-1.2 ELECTRIFICATION WORKS

Sr. No.	M.R.S 2nd BI-Annual 2021 (Chap/Item)	Description	Qty.	Unit	Rate (Rs.)		Amount (Rs.)
					In Figures	In Words	
-		02 Nos.outgoing 20A, MCB, SP, RC=10 kA, Icu=100%Ics					
-		02 Nos. Spare 10/20A, MCB, SP, RC=10 kA, Icu=100%Ics					
-		03 Nos. Space for 10/20A, MCB					
-		Indication lights, push buttons, digital ammeter with selector switch, digital voltmeter with selector switch, Panel box SWG 16 powder					
c)		D.Bs with DP incoming MCB breaker and SP miniature circuit breakers as shown.					
		<u>DB- Security Guard Rooom</u>					
		MATERIAL					
-	RA-41	01 No. Incoming 32 Amp MCB , DP, RC= 10 kA	2	Each			
-		02 Nos. Outgoing 10 Amp MCB, SP, RC=10 kA					
-		01 No. Outgoing 20 Amp MCB, SP, RC=10 kA					
-		02 Nos. spare 10/20 Amp MCB, SP, RC=10 kA					
-		02 Nos. space 10/20 Amp MCB, SP, RC=10 kA					

PUNJAB INTERMEDIATE CITIES IMPROVEMENT INVESTMENT PROGRAM (PICIIP)

ELECTRIFICATION WORKS FOR PARKING SHEDS AT FAREED TOWN SAHIWAL
ELECTRIFICATION WORKS
BILL OF QUANTITIES

B-1.2 ELECTRIFICATION WORKS

Sr. No.	M.R.S 2nd BI-Annual 2021 (Chap/Item)	Description	Qty.	Unit	Rate (Rs.)		Amount (Rs.)
					In Figures	In Words	
-		Indication lights, digital voltmeter, digital ammeter, Panel box SWG 16 powder coated RAL colour 7032, IP class 44 and with all accessories.					
6.0		**(MPB)**					
6.1		LV Switchgear Panel/Main Panel Board of 14 SWG, IP class 44/54 & RAL 7032 including I/C and O/G following electrical items, foundation/base frame with all installation and operational accessories as per site					
(a)	RA-42	**MPB** **INCOMING** 01 No. 100 Amps TP (adj.) MCCB, RC= 25 kA, Icu=100%Ics 01 No. VSS (07 position) 01 No. 0-600 Volts AC DIGITAL Voltmeter 03 Nos. 100/5 Amps Current Transformers 01 No. ASS (R-Y-B-OFF) 01 No. 0-100 Amps AC DIGITAL Ammeter	1	No.			
- - - - - -							

PUNJAB INTERMEDIATE CITIES IMPROVEMENT INVESTMENT PROGRAM (PICIIP)

ELECTRIFICATION WORKS FOR PARKING SHEDS AT FAREED TOWN SAHIWAL
ELECTRIFICATION WORKS
BILL OF QUANTITIES

B-1.2 ELECTRIFICATION WORKS

Sr. No.	M.R.S 2nd BI-Annual 2021 (Chap/Item)	Description	Qty.	Unit	Rate (Rs.)		Amount (Rs.)
					In Figures	In Words	
-		06 Nos. RYB and ON OFF TRIP LED indication lights					
-		14 SWG steel sheet Panel RAL 7032, IP= 44/54 and all other accessories,					
		OUTGOING					
-		01 No. 50Amps., TP(adj.) MCCB, RC=18 kA, Icu=100%Ics (Office Building)					
-		01 No. 25Amps., TP(adj.) MCCB, RC=18 kA, Icu=100%Ics (Work Shop)					
-		02 Nos. 16 Amp MCCB TP, (Adj.) RC=18kA, Icu=100%Ics with 25 Amp. Magnetic Contactor including Push button (ON/OFF) & Indication lights for Area / Shed Lighting.					
-		02 Nos. 32Amp MCB DP, (Adj.) RC=10kA, Icu=100%Ics (Security guard Room)					
-		01 No. Spare 50 Amp MCCB TP, (Adj.) RC=18kA , Icu=100%Ics					
-		01 No. Spare 25 Amp MCCB TP, (Adj.) RC=18kA , Icu=100%Ics					
-		01 Nos. Spare 16 Amp MCCB TP, (Adj.) RC=18kA, Icu=100%Ics with 25 Amp. Magnetic Contactor including Push button (ON/OFF) & Indication lights for Area / Shed Lighting.					

PUNJAB INTERMEDIATE CITIES IMPROVEMENT INVESTMENT PROGRAM (PICIIP)

ELECTRIFICATION WORKS FOR PARKING SHEDS AT FAREED TOWN SAHIWAL
ELECTRIFICATION WORKS
BILL OF QUANTITIES

B-1.2 ELECTRIFICATION WORKS

Sr. No.	M.R.S 2nd BI-Annual 2021 (Chap/Item)	Description	Qty.	Unit	Rate (Rs.)		Amount (Rs.)
					In Figures	In Words	
-		01 No. Spare 32Amp MCB DP, (Adj.) RC=10kA, Icu=100%Ics					
-		02 No. MCCB 25Amps TP, space					
-		All other accessories required for completion of the quality works including Cable gland and					
-		Electrolytic copper bus bar with electrical grade PVC mountings 3 for each, nuts, bolts and washers, control MCB etc. (200 Amps. R+Y+B N, 50 Hz, 415 V, AC) including cable glands at top/bottom entry for cable)					
-		Contractor shall submit the genuine certificate from the manufacturer/authorized agent clear by indicating the project name make/model/rating of MCCB, MCB, magnetic contactors, terminal blocks and voltmeters/ ammeter alongwith warranties.					
7.0		**<u>EARTHING</u>**					
7.1	RA-43	Earth point comprising of 10 ft. 5/8" dia. (16 mm dia) copper coated M.S. rods driven in ground. The earthing rods shall be completed	10	No.			
8.0		**<u>TRANSFORMER</u>**					

PUNJAB INTERMEDIATE CITIES IMPROVEMENT INVESTMENT PROGRAM (PICIIP)

ELECTRIFICATION WORKS FOR PARKING SHEDS AT FAREED TOWN SAHIWAL
ELECTRIFICATION WORKS
BILL OF QUANTITIES

B-1.2 ELECTRIFICATION WORKS

Sr. No.	M.R.S 2nd BI-Annual 2021 (Chap/Item)	Description	Qty.	Unit	Rate (Rs.)		Amount (Rs.)
					In Figures	In Words	
8.1		11/0.415 kV Pole mounted Transformer complete with all accessories as per WAPDA specifications and practice including all required works for proper completion of civil/material works as per specification.					
a)	RA-44	50 kVA	1	Job			
8.2	RA-45	Provision for the cost of security deposit and obtaining of 11 kV electrical connection with installation, testing and commissioning including all material, labour, tools,	1	Lumpsum			
		TOTAL NON-MRS					
		TOTAL (MRS + NON-MRS)					

PUNJAB INTERMEDIATE CITIES IMPROVEMENT INVESTMENT PROGRAM (PICIIP)

PARKING SHEDS AT FREED TOWN SAHIWALL

BILL OF QUANTITIES

B-1.3. SURVEILLIANCE SYSTEM WORKS

Sr. No.	M.R.S 2nd Bl-Annual 2021 (Chap/Item)	Description	Unit	Quantity	Rate (Rs.)		Amount (Rs.)
					In Figures	In Words	
		Supply, wiring, tagging, termination, design, installation, testing and commissioning of following system complete in all respects including all material, labor, tools, accessories etc. as per latest applicable international standards and technical specificaitons attached herewith					
1	RA-46	**Fixed Bullet Camera** Image Sensor : 5 MPX CMOS sensor 1/2.7” Lens Type : motor-zoom, IR Range : 45 meter Enclosure : aluminium outdoor housing	No	17			
2	RA-47	Poles 5m with Foundation	No.	11			
3	RA-48	32CH NVR (Network Video Recorder) with Supported protocols: ONVIF, RTSP, Recording speed up to 960 fps at 3840 x 2160, Supports resolution up to 3840 x 2160, Recorded stream size: 256 Mb/s in total from all cameras, Internal HDDs mount: 8, Monitor outputs: 3 (HDMI (4K UltraHD), HDMI, VGA), Intelligent image analysis.	No.	1			
4	RA-49	Hard Disk 6TB Surveillance SATA 3.5"	No.	1			
5	RA-50	FHD LED Display unit 55 inch including all accessories, wall mounting brackets, software and hardware	No.	1			
6	RA-51	Operator Workstation with VDU	No.	1			
7	RA-52	A4 size Color Printer	No.	1			

PUNJAB INTERMEDIATE CITIES IMPROVEMENT INVESTMENT PROGRAM (PICIIP)

PARKING SHEDS AT FREED TOWN SAHIWALL

BILL OF QUANTITIES

B-1.3. SURVEILLIANCE SYSTEM WORKS

Sr. No.	M.R.S 2nd Bl-Annual 2021 (Chap/Item)	Description	Unit	Quantity	Rate (Rs.)		Amount (Rs.)
8	RA-53	8-PORT PoE+ Managed Switch 8 PoE Ethernet ports of 10/100 Mbps which shall support IEEE 802.2af/at standards. PoE network port with IEEE802.3 af/at standards and shall have 2 x 1000Mbps optical fiber port SFPs	No	5			
9	RA-54	8 ports SFP Slot & 1 port 10/100/1000 Gigabit Optical Fiber Switch	No.	1			
10	RA-55	UTP CAT-6 4-Pair Data Cable	m	150			
11	RA-56	HDPE pipe • size 40mm • outer dia 40mm • wall thickness 3.5mm • standard length: 125m/250m/1000m	m	430			
12	RA-57	27 U Data Cabinet for CCR with fan, lock and glass door	No	1			
13	RA-58	12U Data Cabinet with fan, lock and glass door	No.	5			
14	RA-59	Hand Hole 0.9mx0.9mx0.9m	No.	9			
15	RA-60	24 Core Fiber Optic Cable , Standard G652-D, • Cable type Single Mode • Cable construction Loose tube • Layer of Aramid Yarn 5mm • Wavelength 1300/1550 nm • Max attenuation 0.36 db/km Excavation duct price with all accessories shall be included	m	430			

PUNJAB INTERMEDIATE CITIES IMPROVEMENT INVESTMENT PROGRAM (PICIIP)

PARKING SHEDS AT FREED TOWN SAHIWALL

BILL OF QUANTITIES

B-1.3. SURVEILLIANCE SYSTEM WORKS

Sr. No.	M.R.S 2nd Bl-Annual 2021 (Chap/Item)	Description	Unit	Quantity	Rate (Rs.)		Amount (Rs.)
16	RA-61	24-Port ODF with coupler, pigtails and Patch cords, complete accessories. Housing Material :Steel Allow for **any other item** required for completion of system not covered in BOQ or specifications / drawings in accordance with the same standards and brands shown and approved by consultant. All such items shall be covered in this item but complete description, item rates, quantity required and brands shall be mentioned separately and to be attached with the BOQ. **Note:** **1)** The Bidder shall provide the all BoQ items as per Technical Specificationtem of Bidding Documents brands shown and approved by consultant. **2)** Contractor is advised to confirm the cable running lengths as per site conditions before commencement of work.The Payment of cable shall be paid as per Running meter.	No	1			
Total Price (MRS + NON-MRS)							

PUNJAB INTERMIDIATE CITIES IMPROVEMENT INVESTMENT PROGRAM (PICIIP)

MISCELLANEOUS CIVIL WORKS FOR PARKING SHEDS AT FAREED TOWN SAHIWAL

BILL OF QUANTITIES

B-1.4 TRANSPORTATION WORKS

Item No.	*MRS, 2nd Bi - Annual 2021 Chap./ Item*	*Description*	*Unit*	*Qty*	*Rate (Rs.)*		*Amount (Rs.)*
					In Figures	*In Words*	
1	**MRS ITEMS ROAD WORKS**						
1.1	Ch. 3 Item 5 (i) + Ch.3 Item 17 (a,b,c)	Earthwork in ordinary soil for embankments, including ploughing and mixing with blade grade or disc harrow or other suitable equipment, and compaction by mechanical means at optimum moisture content and dressing to designed section, complete in all respects:- i) 95% to 100% maximum modified AASHO dry density. (Material from Borrow excavation including 8km lead & lift)	Cft	144,210			
1.2	Ch. 3 Item 25 (i)	Compaction of earthwork with power road roller, including ploughing, mixing, moistening earth to optimum moisture content in layers, etc.complete: i) 95% to 100% maximum modified AASHO dry density.	Cft	24,040			

PUNJAB INTERMIDIATE CITIES IMPROVEMENT INVESTMENT PROGRAM (PICIIP)

MISCELLANEOUS CIVIL WORKS FOR PARKING SHEDS AT FAREED TOWN SAHIWAL

BILL OF QUANTITIES

B-1.4 TRANSPORTATION WORKS

Item No.	***MRS, 2nd Bi - Annual 2021 Chap./ Item***	***Description***	***Unit***	***Qty***	***Rate (Rs.)***		***Amount (Rs.)***
1.3	18/3 (a-ii), 1/1	Providing and laying subbase course of crushed stone aggregate of approved quality and grade, including placing, mixing, spreading and compaction of subbase material to required depth, camber, grade to achieve 100% maximum modified AASHO dry density, (Including carriage of all material to site of work from Sikhanwali Quarry Sargodha)	Cft	24,040			

PUNJAB INTERMIDIATE CITIES IMPROVEMENT INVESTMENT PROGRAM (PICIIP)

MISCELLANEOUS CIVIL WORKS FOR PARKING SHEDS AT FAREED TOWN SAHIWAL

BILL OF QUANTITIES

B-1.4 TRANSPORTATION WORKS

Item No.	*MRS, 2nd Bi - Annual 2021 Chap./ Item*	*Description*	*Unit*	*Qty*	*Rate (Rs.)*		*Amount (Rs.)*
1.4	Ch. 6 item 6(a)(ii) 2 + 1-1	Providing and laying reinforced cement concrete (including prestressed concrete), using coarse sand and screened graded and washed aggregate, in required shape and design, including forms, moulds, shuttering, lifting, compacting, curing, rendering and finishing exposed surface, complete (but excluding the cost of steel reinforcement, its fabrication and placing in position, etc.):- (a) (ii) Reinforced cement concrete in slabod raft / strip foundation,base slab of coloum and retaining walls, etc and other structural member other than those mentioned in 5(a) (i) above not requiring form work (i.e. horizental 4000psi Concrete - Joint Reinforced Concrete Pavement (J.R.C.P)	Cft	25,240			
1.5	Ch. 6 / 5(i) + 1-1	Cement concrete plain including placing, compacting, finishing and curing complete (including screening and washing of stone aggregate): (i) Ratio 1: 4: 8	Cft	16,030			

PUNJAB INTERMIDIATE CITIES IMPROVEMENT INVESTMENT PROGRAM (PICIIP)

MISCELLANEOUS CIVIL WORKS FOR PARKING SHEDS AT FAREED TOWN SAHIWAL

BILL OF QUANTITIES

B-1.4 TRANSPORTATION WORKS

Item No.	*MRS, 2nd Bi - Annual 2021 Chap./ Item*	*Description*	*Unit*	*Qty*	*Rate (Rs.)*		*Amount (Rs.)*
1.6	Ch. 6 / 9(c)	Fabrication of mild steel reinforcement for cement concrete, including cutting, bending, laying in position, making joints and fastenings, including cost of binding wire and labour charges for binding of steel reinforcement (also includes removal of rust from bars): (c) Deformed bars (Grade-60)	TON	43.00			
1.7	Ch. 18 / 16	Providing and laying expansion joint of neoprine strip 4"x¼" (100 mmx 6 mm) and plastic bitumen.	Rft	6,810			
1.8	Ch. 6 item 49b(i)	Providing and fixing precast Edge kerb stone (4" to 6" thick) of 3500 PSI Compressive Strenght, embeded in PCC 1:2:4 over lean concrete 1:4:8 etc complete in all respect.b) with painting(i) 14" high	Rft	370			
		Sub Total: MRS Items (2)					

PUNJAB INTERMEDIATE CITIES IMPROVEMENT INVESTMENT PROGRAM (PICIIP)
OFFICE BUILDING SAHIWAL
BILL OF QUANTITIES

B - 1.5.1 PLUMBING WORKS

Sr. No.	*MRS 2nd Bi-Annual 2021 Ch / Item*	*Description*	*Unit*	*Quantity*	*Rate (Rs.)*		*Amount (Rs.)*
					In Figures	*In Words*	
I		**MRS ITEMS**					
A		**INTERNAL PLUMBING**					
		PLUMBING FIXTURES					
1	19/27	Providing and fixing chromium plated tee stop cock 15 mm (1/2").	No.	15			
2	19/23	Providing and fixing chromium plated pillar-cock, heavy:- 1.5 cm (½")	No.	2			
3	19/29	Providing and fixing chromium plated mixing valve, for wash hand basin, sink or shower.	No.	1			
4	19/1(i)	Providing and fitting glazed earthen ware water closet european type, excluding seat and cover, white	No.	3			
5	19/11(i)	Providing and fitting glazed earthern ware made low down flushing cistern 13.63 litre (3 gallons) capacity, including bracket set, copper connection, etc. complete in all respects.	No.	3			
6	19/2(i)	Providing and fixing, double seat and cover only, bakelite.	No.	3			
7	19/3(i)	Providing and fitting glazed earthen ware water closet, squatter type (orissa pattern), combined with foot rest, white.	No.	4			
8	19/12(i)	Providing and fitting plastic made low down flushing cistern 13.63 litre (3 gallons) capacity, including bracket set, copper connection, etc. complete in all respects.	No.	4			

PUNJAB INTERMEDIATE CITIES IMPROVEMENT INVESTMENT PROGRAM (PICIIP)
OFFICE BUILDING SAHIWAL
BILL OF QUANTITIES

B - 1.5.1 PLUMBING WORKS

Sr. No.	*MRS 2nd Bi-Annual 2021 Ch / Item*	*Description*	*Unit*	*Quantity*	*Rate (Rs.)*		*Amount (Rs.)*
9		Providing and fitting glazed earthen ware wash hand basin 56 × 40 cm (22" × 16") including bracket set, waste pipe and waste coupling,etc.					
	19/6(iii)	i) white, without pedestal	No.	7			
10	19/5(ii)	Providing and fixing chromium plated bottle trap with waste pipe, etc. complete:- 4 cm (1½").	No.	7			
11	19/15	Providing and fixing, chromium plated soap dish.	No.	5			
12	19/17	Providing and fixing chromium plated toilet paper holder.	No.	3			
13	19/7(i)	Providing and fixing 1.5 cm (1/2") dia connection, including check nuts, etc; plastic rubber connection.	No.	15			
14	23/46	Providing, fixing, jointing and testing Polypropylene Random (PPR) pipes of approved quality, for cold water as per DIN 8077-8078,PN-20 for pipes and DIN 16962,PN-25 for fittings (polyfusion welded joints) inside building including fittings and specials					
		i) 25 mm O.D	Rft	141.00			
		ii) 32 mm O.D	Rft	40.00			
		iii) 40 mm O.D	Rft	39.00			

PUNJAB INTERMEDIATE CITIES IMPROVEMENT INVESTMENT PROGRAM (PICIIP)
OFFICE BUILDING SAHIWAL
BILL OF QUANTITIES

B - 1.5.1 PLUMBING WORKS

Sr. No.	*MRS 2nd Bi-Annual 2021 Ch / Item*	*Description*	*Unit*	*Quantity*	*Rate (Rs.)*		*Amount (Rs.)*
15	23/45	Providing and installing Brass Ball/ Handle valves of approved quality of following nominal dia, including jointing, fitting, painting, testing, complete in all respects to match with PPR/uPVC pipes of following diameters.					
		i) 63 mm O.D	No.	1.00			
		ii) 50 mm O.D	No.	2.00			
		iii) 40 mm O.D	No.	1.00			
		iv) 25 mm O.D	No.	1.00			
		SEWERAGE AND DRAINAGE					
16	19/46	Providing, fixing, cutting, jointing and testing uPVC drainage pipes of approved quality, including uPVC drainage fittings with solvent cement jointing "Type B" or approved equal, rates include cost of clamping to walls and ceiling, hangers, supports, complete in all respect					
		i) 2" i/d	Rft	39.00			
		ii) 3" i/d	Rft	193.00			
		iii) 4" i/d		111.00			
17	19/47	Providing, fixing, testing and commissioning of µ-PVC (Unplasticized polyvinyl Chloride) Nikasi/ waste pipe Fittings make of dadex / Popular / Beta / BBJ conforming to code EN-1401 ncluding the cost of Solvents complete in all respect as approved and directed by the Engineer Incharge.					
		(a) P-Trap	No.	4			
		(b) Multi-Trap (i) 4" dia	No.	11			
		(c') Vent Cowel (ii) 3" dia	No.	4			

PUNJAB INTERMEDIATE CITIES IMPROVEMENT INVESTMENT PROGRAM (PICIIP)
OFFICE BUILDING SAHIWAL
BILL OF QUANTITIES

B - 1.5.1 PLUMBING WORKS

Sr. No.	*MRS 2nd Bi-Annual 2021 Ch / Item*	*Description*	*Unit*	*Quantity*	*Rate (Rs.)*		*Amount (Rs.)*
B		**EXTERNAL PLUMBING**					
18	3/44	Excavation of trenches in all kinds of soil except cutting rock for water supply pipelines upto 5 ft depth from ground level including trimming, dressing sides, leveling the beds of trenches to correct grade and cutting pits for joints complete in all respects.	1000Cft	0.74			
19	7/30	Supplying & filling sand under floor; or plugging in wells.	100Cft	0.82			
		SEWERAGE AND DRAINAGE					
20	19/35	Providing and fitting, 4" gully trap including cement concrete ,cost of PVC grating (6" x 6") and masonry chamber (12" x 12").	No.	4			
21		Earthwork excavation in open cutting for sewers and manholes as shown in drawings including shuttering and timbering, dressing to correct section and dimensions according to templates and levels and removing surface water in all types of soil except shingle gravel and rock upto:					
	3/42 (i)	i) 0 to 7 ft	t	1.62			
22	3/13a	Rehandling of earthwork, lead upto a single throw of kassi, phaorah or shovel.	1000Cft	1.30			
23	3/24 (a)	Mixing moistening earth to optimum moisture content in layers for compaction etc., complete.	1000Cft	1.30			
24	3/24 (b) (ii)	Compaction of earthwork by rolling with animal driven roller/hand rammed for ordinary soil.	1000Cft	1.30			
25	7/30	Supplying & filling sand under floor; or plugging in walls.	100Cft	2.36			

PUNJAB INTERMEDIATE CITIES IMPROVEMENT INVESTMENT PROGRAM (PICIIP)
OFFICE BUILDING SAHIWAL
BILL OF QUANTITIES

B - 1.5.1 PLUMBING WORKS

Sr. No.	*MRS 2nd Bi-Annual 2021 Ch / Item*	*Description*	*Unit*	*Quantity*	*Rate (Rs.)*		*Amount (Rs.)*
26	19/46	Supplying, laying, jointing, testing of non-pressure uPVC pipes (SN-08, SDR 34) conforming to EN:1401, including uPVC pipes fittings and accessories complete in all respects as per drawings and specifications as per approved manufacturer. i) 6" i/d	Rft	143.00			
27	21/17	Providing and fixing, 6" (150 mm) thick R.C.C. manhole cover with 3"x3"x¼" (75x75x6mm) angle iron frame, 22" (550 mm) i/d as per standard drawing STD/PD No. 7 of 1977, complete in all respects.	Set	3.00			
		Sub total: MRS ITEMS					
II		**NON MRS ITEMS**					
A		**INTERNAL PLUMBING** **WATER SUPPLY**					
28	RA 65	Supply and installation of Instant electric water heater of following capacity , including ball valves on inlet and outlet connections complete in all respects. i) 10 L/Min	No.	1			
29	RA 66	Providing and fixing Muslim Shower with double bib cock complete in all respects.	No.	7			
		SEWERAGE AND DRAINAGE					
30	RA 70	Providing and fixing angle drain for 3" or 4" dia rainwater pipe with brass top complete in all respects.	No.	2			

PUNJAB INTERMEDIATE CITIES IMPROVEMENT INVESTMENT PROGRAM (PICIIP)
OFFICE BUILDING SAHIWAL
BILL OF QUANTITIES

B - 1.5.1 PLUMBING WORKS

Sr. No.	*MRS 2nd Bi-Annual 2021 Ch / Item*	*Description*	*Unit*	*Quantity*	*Rate (Rs.)*		*Amount (Rs.)*
31	RA 71	Providing and fixing looking glass of approved make, 5mm thick complete with frame and fixing clamps.	Sft.	41.12			
B		**EXTERNAL PLUMBING**					
B		**NON MRS ITEMS**					
		WATER SUPPLY					
32	RA 72	Providing, fixing, jointing and testing Polyethylene Pipes (PE 100) of class PN 10 of approved manufacturer for cold water including fittings and specials complete in all respects.					
		i) 63 mm	Rft	85			
		ii) 50 mm	Rft	55			
		v) 40 mm	Rft	75			
33	RA 74	Providing and fixing Water Tank of (Tuff/Dura) or equivalent Fiber Double ply having 500 gallons capacity (Vertical), complete in all respect.	No.	1			
	RA 75	Supplying, installation, Testing & commisioning of Horizontal Cenrtifugal Pump 25 gpm capacity and head 30 ft, including motor complete in all respect.	No.	1			
		SEWERAGE AND DRAINAGE					
34	RA 76	Construction of square masonary manhole 2.5 x 2.5 ft, including cover and frame.					
		i) upto 5 ft depth	No.	4			

PUNJAB INTERMEDIATE CITIES IMPROVEMENT INVESTMENT PROGRAM (PICIIP)
OFFICE BUILDING SAHIWAL
BILL OF QUANTITIES

B - 1.5.1 PLUMBING WORKS

Sr. No.	*MRS 2nd Bi-Annual 2021 Ch / Item*	*Description*	*Unit*	*Quantity*	*Rate (Rs.)*		*Amount (Rs.)*
35	RA 77	Providing and fixing malleable cast iron step (10" Approx. Weight 7.5kg) in manhole chambers, including carriage and setting the same in work, to correct lines and levels as per drawing and specifications.	No.	14			
36	RA 78	Supplying and fixing 2" dia G.I air vent on roof of Septic Tank.	No.	3			
37	Job	WASA charges for external water and sewerage connection	LS	1			
		Sub total: NON MRS ITEMS					
		SUB TOTAL					

PUNJAB INTERMEDIATE CITIES IMPROVEMENT INVESTMENT PROGRAM (PICIIP)

MISCELLANEOUS CIVIL WORKS FOR PARKING SHEDS AT FAREED TOWN SAHIWAL

OFFICE BUILDING
BILL OF QUANTITIES

B - 1.5.2 PLUMBING WORKS FOR BUILDING AND WATER SUPPLY SYSTEM FOR PARKING SHED

Bill No. 2 WATER SUPPLY SYSTEM

Sr. No.	MRS 2nd Bi-Annual 2021 Chap#/Item#	Description	Unit	Quantity	Rate (Rs)		Amount (Rs)
					In Figures	In Words	
1	4/45	Dismantling and removing road metalling. (Provisional Quantity)	100Cft	0.47			
2	4/46	Dismantling and removing road pavement, etc., including screening and stacking of byproducts upto one chain lead 30 metre). **(Base, Sub Base, soling and tuff Paver etc.)** (Provisional Quantity)	100Cft	2.26			
3	4/19	c) Dismantling cement concrete 1:2:4 plain. (Provisional Quantity)	100Cft	0.20			
4	3/44	Excavation of trenches in all kinds of soil, except cutting rock, for watersupply pipelines upto 5 ft. (1.5 m) depth from ground level, including trimming, dressing sides, levelling the beds of trenches to correct grade and cutting pits for joints, etc. complete in all respects.	1000Cft	2.80			
5	3/13	Rehandling of earthwork: a) Lead upto a single throw of Kassi, phaorah or shovel.	1000Cft	2.78			

PUNJAB INTERMEDIATE CITIES IMPROVEMENT INVESTMENT PROGRAM (PICIIP)

MISCELLANEOUS CIVIL WORKS FOR PARKING SHEDS AT FAREED TOWN SAHIWAL

OFFICE BUILDING
BILL OF QUANTITIES

B - 1.5.2 PLUMBING WORKS FOR BUILDING AND WATER SUPPLY SYSTEM FOR PARKING SHED

Bill No. 2 WATER SUPPLY SYSTEM

Sr. No.	MRS 2nd Bi-Annual 2021 Chap#/Item#	Description	Unit	Quantity	Rate (Rs)		Amount (Rs)
					In Figures	In Words	
6	3/24	Compaction of earthwork (soft, ordinary or hard soil) :- (Backfilling) a) Mixing, moistening earth to optimum moisture content in layers for compaction, etc. complete.	1000Cft	2.78			
		c) Ramming earthwork (all types of soil). (Backfilling and sand in bedding)	1000Cft	3.18			
7	7/30	Supplying and filling sand under floor; or plugging in wells (in bedding) (Around pipes along road cuts Provisional Quantity)	100Cft	4.08			
Total Amount (MRS Items)							

PUNJAB INTERMEDIATE CITIES IMPROVEMENT INVESTMENT PROGRAM (PICIIP)

MISCELLANEOUS CIVIL WORKS FOR PARKING SHEDS AT FREED TOWN SAHIWAL

OFFICE BUILDING
BILL OF QUANTITIES

B - 1.5 .2 PLUMBING WORKS FOR BUILDING AND WATER SUPPLY SYSTEM FOR PARKING SHED

Bill No. 2 WATER SUPPLY SYSTEM

NON-MRS ITEMS

Sr. No.	MRS 2nd Bi-Annual 2021 Chap#/Item#	Description	Unit	Quantity	Rate (Rs)		Amount (Rs)
					In Figures	In Words	
1	RA-01	Providing, transportation, laying, cutting, butt fusion jointing, testing, commissioning & disinfecting the High Density Polyethylene Pipe (HDPE) PE-100, (PN-10) SDR 17 including fittings and specials conforming to ISO 4427 or DN8074/8075 or equivalent to the satisfication of Engineer. The pipe shall be from reputable manufacturer approved by the Engineer.) 63 mm o/d	Rft.	462			
Total Amount (NON MRS Items)							
Total (MRS + Non-MRS)							

PUNJAB INTERMEDIATE CITIES IMPROVEMENT INVESTMENT PROGRAM (PICIIP)

MISCELLANEOUS CIVIL WORKS FOR PARKING SHEDS AT MUBARAK PURA CAPITAL ROAD, SIALKOT

BRICK MASONARY BOUNDARY WALL

BILL OF QUANTITIES

B - 2.1 ARCHITECTUAL AND STRUCTURAL WORKS

Bill No. 1 BRICK MASONARY BOUNDARY WALL

Sr. No	M.R.S 2nd BI-Annual 2021 (Chap/Item)	Description	Unit	Quantity	Unit Rate (Rs)		Amount (Rs)
					In Figures	In Words	
1	3/21(b)	Excavation in foundation of building, bridges and other structures, including dagbelling, dressing, refilling around structure with excavated earth, watering and rammiing lead upto one chain (30 m) and lift upto 5 ft. (1.5 m) b) upto 5 ft. (1.5 m)in ordinary soil	Cft	48,157.20			
2	7/30	Select Fill for specifications see the geotechnical rcommendations *** (Supplying and filling sand under floor or plugging in wells).**	Per Cft	24,078.60			
3	6/5(h)	Cement concrete plain including placing, compacting, finishing and curing complete (including screening and washing of stone aggregate): (i) 1500 psi Ratio (1:3:6)	Cft	1,852.20			

PUNJAB INTERMEDIATE CITIES IMPROVEMENT INVESTMENT PROGRAM (PICIIP)

MISCELLANEOUS CIVIL WORKS FOR PARKING SHEDS AT MUBARAK PURA CAPITAL ROAD, SIALKOT

BRICK MASONARY BOUNDARY WALL

BILL OF QUANTITIES

B - 2.1 ARCHITECTUAL AND STRUCTURAL WORKS

Bill No. 1 BRICK MASONARY BOUNDARY WALL

Sr. No	M.R.S 2nd BI-Annual 2021 (Chap/Item)	Description	Unit	Quantity	Unit Rate (Rs)		Amount (Rs)
4	6/6(a)(i)(3)	Providing and laying reinforced cement concrete (including prestressed concrete), using coarse sand and screened graded and washed aggregate, in required shape and design, including forms, moulds, shuttering, lifting, compacting, curing, rendering and finishing exposed surface, complete (but excluding the cost of steel reinforcement, its fabrication and placing in position, etc.):- (a) (i) Reinforced cement concrete in roof slab, beams, columns lintels, girders and other structural members laid in situ or precast laid in position, or prestressed members cast in situ, complete in all respects:- 2500psi with ratio(1:2:4)	Per Cft	657.62			

PUNJAB INTERMEDIATE CITIES IMPROVEMENT INVESTMENT PROGRAM (PICIIP)

MISCELLANEOUS CIVIL WORKS FOR PARKING SHEDS AT MUBARAK PURA CAPITAL ROAD, SIALKOT

BRICK MASONARY BOUNDARY WALL

BILL OF QUANTITIES

B - 2.1 ARCHITECTUAL AND STRUCTURAL WORKS

Bill No. 1 BRICK MASONARY BOUNDARY WALL

Sr. No	M.R.S 2nd BI-Annual 2021 (Chap/Item)	Description	Unit	Quantity	Unit Rate (Rs)		Amount (Rs)
5	6/6(a)(ii)(3)	(a) (ii) Reinforced cement concrete in slab of rafts / strip foundation, base slab of column and retaining walls; etc and other structural members other than those mentioned in 5(a) (i) above not requiring form work (i.e. horizental shuttering) complete in all respects:- 2500psi with ratio(1:2:4)	Per Cft	1,125.21			
6	6/9('c)	Fabrication of mild steel reinforcement for cement concrete, including cutting, bending, laying in position, making joints and fastenings, including cost of binding wire and labour charges for binding of steel reinforcement (also includes removal of rust from bars):- ('c) Deformed bars (Grade-60)	Tons	4.2000			
7	7/4(i)	Pacca brick work in foundation and plinth in:- (Plinth protection) i) Cement, sand mortar:- Ratio 1:3	Cft	8,566.45			
8	7/5(i)	Pacca brick work in ground floor:-i) Cement, sand mortar:- Ratio 1:3	Cft	5,554.60			

PUNJAB INTERMEDIATE CITIES IMPROVEMENT INVESTMENT PROGRAM (PICIIP)

MISCELLANEOUS CIVIL WORKS FOR PARKING SHEDS AT MUBARAK PURA CAPITAL ROAD, SIALKOT

BRICK MASONARY BOUNDARY WALL

BILL OF QUANTITIES

B - 2.1 ARCHITECTUAL AND STRUCTURAL WORKS

Bill No. 1 BRICK MASONARY BOUNDARY WALL

Sr. No	M.R.S 2nd BI-Annual 2021 (Chap/Item)	Description	Unit	Quantity	Unit Rate (Rs)		Amount (Rs)
9	11/8 C	Cement plaster 1:3 upto 20' (6.00 m) heightc) ¾" (20 mm) thick	Sft	7,408.80			
10	11/16 B	Cement pointing flush upto 20' (6.00 m) heihgt b) ratio 1:3	Sft	9,882.90			
11	25/50	Providing and fixing barbed wire fencing on compound wall, consisting of 1½"x1½"x3/16" (40x40x5mm) angle iron post 3' (900 mm) long, 4' (1200 mm) apart embedded in cement concrete 1:4:8 base of size 6"x6"x9" (150x150x225 mm) and 4 rows of barbed wire, including binding wire, painting posts, etc. complete in all respects.	RFT	1,176.00			
Total Amount							

PUNJAB INTERMEDIATE CITIES IMPROVEMENT INVESTMENT PROGRAM (PICIIP)

MISCELLANEOUS CIVIL WORKS FOR PARKING SHEDS AT MUBARAK PURA CAPITAL ROAD, SIALKOT

OFFICE BUILDING (STAFF OFFICE, DRIVER ROOM & TOILETS)
BILL OF QUANTITIES

B - 2.1 ARCHITECTUAL AND STRUCTURAL WORKS

Bill No. 2 OFFICE BUILDING (STAFF OFFICE, DRIVER ROOM & TOILETS)

Sr. No	M.R.S 2nd BI-Annual 2021 (Chap/Item)	Description	Unit	Quantity	Rate (Rs.)		Amount (Rs)
					In Figures	In Words	
1	3/21(b)	Excavation in foundation of building, bridges and other structures, including dagbelling, dressing, refilling around structure with excavated earth, watering and rammiing lead upto one chain (30 m) and lift upto 5 ft. (1.5 m) b) upto 5 ft. (1.5 m)in ordinary soil	Cft	19,679.03			
2	7/30	Select Fill for specifications see the geotechnical rcommendations *** (Supplying and filling sand under floor or plugging in wells).**	Cft	9,839.52			
3	26/42	TERMITE CONTROL TREATMENT foundations and floors complete in all respects as shown on the drawings/specifications and/or as directed by the Engineer. (Spraying anti -	SFT	12138.39			
4	6/5(h)	Cement concrete plain including placing, compacting, finishing and curing complete (including screening and washing of stone aggregate): (i) 1500 psi Ratio (1:3:6)	Cft	488.74			

PUNJAB INTERMEDIATE CITIES IMPROVEMENT INVESTMENT PROGRAM (PICIIP)

MISCELLANEOUS CIVIL WORKS FOR PARKING SHEDS AT MUBARAK PURA CAPITAL ROAD, SIALKOT

OFFICE BUILDING (STAFF OFFICE, DRIVER ROOM & TOILETS)
BILL OF QUANTITIES

B - 2.1 ARCHITECTUAL AND STRUCTURAL WORKS

Bill No. 2 OFFICE BUILDING (STAFF OFFICE, DRIVER ROOM & TOILETS)

Sr. No	M.R.S 2nd BI-Annual 2021 (Chap/Item)	Description	Unit	Quantity	Rate (Rs.)		Amount (Rs)
5		Providing and laying reinforced cement concrete (including prestressed concrete), using coarse sand and screened graded and washed aggregate, in required shape and design, including forms, moulds, shuttering, lifting, compacting, curing, rendering and finishing exposed surface, complete (but excluding the cost of steel reinforcement, its fabrication and placing in position, etc.):-					
5A	6/6(a)(ii)(3)	(a)(ii) Reinforced cement concrete in slab of rafts / strip foundation, base slab of column and retaining walls; etc and other structural members other than those mentioned in 5(a) (i) above not requiring form work (i.e. horizental shuttering) complete in all respects:- 2500psi (Ratio 1:2:4)	Per Cft	1,217.57			

PUNJAB INTERMEDIATE CITIES IMPROVEMENT INVESTMENT PROGRAM (PICIIP)

MISCELLANEOUS CIVIL WORKS FOR PARKING SHEDS AT MUBARAK PURA CAPITAL ROAD, SIALKOT

OFFICE BUILDING (STAFF OFFICE, DRIVER ROOM & TOILETS)

BILL OF QUANTITIES

B - 2.1 ARCHITECTUAL AND STRUCTURAL WORKS

Bill No. 2 OFFICE BUILDING (STAFF OFFICE, DRIVER ROOM & TOILETS)

Sr. No	M.R.S 2nd BI-Annual 2021 (Chap/Item)	Description	Unit	Quantity	Rate (Rs.)		Amount (Rs)
5B	6/6(a)(i)(3)	(a) (i) Reinforced cement concrete in roof slab, beams, columns lintels, girders and other structural members laid in situ or precast laid in position, or prestressed members cast in situ, complete in all respects:- 2500psi (Ratio 1:2:4)	Per Cft	1,355.57			
6	6/9('c)	Fabrication of mild steel reinforcement for cement concrete, including cutting, bending, laying in position, making joints and fastenings, including cost of binding wire and labour charges for binding of steel reinforcement (also includes removal of rust from bars):- ('c) Deformed bars (Grade-60)	Tons	6.13			
7	7/4(i)	Pacca brick work in foundation and plinth in:- (Plinth protection) i) Cement, sand mortar:- Ratio 1:3	Cft	2,758.68			
8		**Damp Proof Course**					

PUNJAB INTERMEDIATE CITIES IMPROVEMENT INVESTMENT PROGRAM (PICIIP)

MISCELLANEOUS CIVIL WORKS FOR PARKING SHEDS AT MUBARAK PURA CAPITAL ROAD, SIALKOT

OFFICE BUILDING (STAFF OFFICE, DRIVER ROOM & TOILETS)
BILL OF QUANTITIES

B - 2.1 ARCHITECTUAL AND STRUCTURAL WORKS

Bill No. 2 OFFICE BUILDING (STAFF OFFICE, DRIVER ROOM & TOILETS)

Sr. No	M.R.S 2nd BI-Annual 2021 (Chap/Item)	Description	Unit	Quantity	Rate (Rs.)		Amount (Rs)
	6/33(b)(i)	Providing and laying damp proof course (1.5" Thick) of cement concrete 1:2: 4(using cement, sand and shingle), including bitumen coating (2 Coats of Bitumen)	Sft	196.28			
	6/35(b)(ii)b	Providing and laying vertical damp proof course with cement sand plaster (3/4" thick with 1:3 ratio) and bitumen coating (2 Coats of Bitumen)	Sft	523.43			
10	3/15 (i)	Filling, watering and ramming earth under floors:- ***with surplus earth from foundation, etc.***	1000 Cft.	3.00			
11	3/17 (a, b,c,d)	Transportation of ***Earth all types*** when the total distance including the lead covered in the item of work, is more than 1000 ft.(300 m)	1000 Cft.	4.00			
12	3/24 (a, b-i)	Compaction of **Earthwork** (soft, ordinary or hard soil) :-	1000 Cft.	4.00			

PUNJAB INTERMEDIATE CITIES IMPROVEMENT INVESTMENT PROGRAM (PICIIP)

MISCELLANEOUS CIVIL WORKS FOR PARKING SHEDS AT MUBARAK PURA CAPITAL ROAD, SIALKOT

OFFICE BUILDING (STAFF OFFICE, DRIVER ROOM & TOILETS)
BILL OF QUANTITIES

B - 2.1 ARCHITECTUAL AND STRUCTURAL WORKS

Bill No. 2 OFFICE BUILDING (STAFF OFFICE, DRIVER ROOM & TOILETS)

Sr. No	M.R.S 2nd BI-Annual 2021 (Chap/Item)	Description	Unit	Quantity	Rate (Rs.)		Amount (Rs)
13	7/30	Supplying and filling ***sand under floor*** ; or plugging in wells.	100 Cft.	9.00			
		Sub total: Earthwork					
14	6/5 (i)	Cement **Concrete plain** including placing, compacting, finishing and curing complete (including screening and washing of stone aggregate)					
	6/5 (i)	*Ratio 1:4:8 (under floor.)*	100 Cft.	8.00			
	6/5 (f)	*Ratio 1:2:4 (under floor.)*	100 Cft.	2.00			
		Sub total: Concrete					
15	7/5.(i)	Pacca brick work in ground floor:-:- Cement, sand mortar:-**Ratio 1:5**	100 Cft.	25.00			
16	7/5.(i)	Pacca brick work in ground floor:-:- Cement, sand mortar:-**Ratio 1:4**	100 Cft.	2.00			

PUNJAB INTERMEDIATE CITIES IMPROVEMENT INVESTMENT PROGRAM (PICIIP)

MISCELLANEOUS CIVIL WORKS FOR PARKING SHEDS AT MUBARAK PURA CAPITAL ROAD, SIALKOT

OFFICE BUILDING (STAFF OFFICE, DRIVER ROOM & TOILETS)
BILL OF QUANTITIES

B - 2.1 ARCHITECTUAL AND STRUCTURAL WORKS

Bill No. 2 OFFICE BUILDING (STAFF OFFICE, DRIVER ROOM & TOILETS)

Sr. No	M.R.S 2nd BI-Annual 2021 (Chap/Item)	Description	Unit	Quantity	Rate (Rs.)		Amount (Rs)
17	9/5-9/12	Providing and laying 9" x 4½" x 1½" (225mm x 113mm x 40 mm) **brick tiles** grouted with cement sand 1:3, laid over 4"(100 mm) (average) thick earth with 1" (25 mm) mud plaster without Bhoosaw, grouted with cement sand 1:3 on top of **RCC roof slab**, ***excluding c*** *ost of 34 lbs. per %Sft. or 1.72 Kg/Sq.m bitumen coating sand blinded* **.**					
		First Floor	100 Sft.	20.00			
18	26/37 (ii)	Supplying and laying **polythene sheet** over D.P.C. under floors and on roofs, etc.					
		500 gauge	Sft.	3,906.00			

PUNJAB INTERMEDIATE CITIES IMPROVEMENT INVESTMENT PROGRAM (PICIIP)

MISCELLANEOUS CIVIL WORKS FOR PARKING SHEDS AT MUBARAK PURA CAPITAL ROAD, SIALKOT

OFFICE BUILDING (STAFF OFFICE, DRIVER ROOM & TOILETS)
BILL OF QUANTITIES

B - 2.1 ARCHITECTUAL AND STRUCTURAL WORKS

Bill No. 2 OFFICE BUILDING (STAFF OFFICE, DRIVER ROOM & TOILETS)

Sr. No	M.R.S 2nd BI-Annual 2021 (Chap/Item)	Description	Unit	Quantity	Rate (Rs.)		Amount (Rs)
19	9/45 (c)	Providing and Laying Insulation material of ***Extruded Polystyrene XPS*** in Rigid Insulation / Foam Board on roof or walls, Density 32-38Kg/M3, compressive strength 250-400 kpa, R-value 5 per inch thickness and water absorption (1% by volume, cell structure colored cell) i/c cutting and placing in position complete in all respect.					
		2" thick	100 Sft.	20.00			
20	9/15	Construction of Khuras on roof 2' x 2' x 6"	Each.	2.00			
21	10/15 (e)	Providing and laying **2" thick topping** of cement concrete 1:2:4, including surface finishing and dividing in panels.	100 Sft.	7.00			
22	10/42 (a)	Providing and fixing size 1½" x 3/8" (40 x 10 mm) **marble strip** of any shade for dividing the mosaic flooring into panels.	Rft.	450.00			

PUNJAB INTERMEDIATE CITIES IMPROVEMENT INVESTMENT PROGRAM (PICIIP)

MISCELLANEOUS CIVIL WORKS FOR PARKING SHEDS AT MUBARAK PURA CAPITAL ROAD, SIALKOT

OFFICE BUILDING (STAFF OFFICE, DRIVER ROOM & TOILETS)
BILL OF QUANTITIES

B - 2.1 ARCHITECTUAL AND STRUCTURAL WORKS

Bill No. 2 OFFICE BUILDING (STAFF OFFICE, DRIVER ROOM & TOILETS)

Sr. No	M.R.S 2nd BI-Annual 2021 (Chap/Item)	Description	Unit	Quantity	Rate (Rs.)		Amount (Rs)
23	11/10 (b)	Cement plaster ratio 1:3 under **soffit of R.C.C. roof slabs** only, upto 20' height. 3/8" (10 mm) thick.	100 Sft.	18.00			
24	11/9 (b)	Cement plaster 1:4 on **internal walls** upto 20' (6.00 m) height and ½" (13 mm) thick.	100 Sft.	38.00			
25	11/9 (c)	Cement plaster 1:4 on **internal walls** upto 20' (6.00 m) height and ¾" (20 mm) thick.	100 Sft.	25.00			
26	11/9 (c)	Cement plaster 1:4 on ***external walls*** upto 20' (6.00 m) height and ¾" (20 mm) thick.	100 Sft.	41.00			
27	12/27 (b)	Providing and fixing **chowkat for doors**, windows and C.windows, including holdfast, etc. ***Deodar wood***	Sft.	119.00			

PUNJAB INTERMEDIATE CITIES IMPROVEMENT INVESTMENT PROGRAM (PICIIP)

MISCELLANEOUS CIVIL WORKS FOR PARKING SHEDS AT MUBARAK PURA CAPITAL ROAD, SIALKOT

OFFICE BUILDING (STAFF OFFICE, DRIVER ROOM & TOILETS)
BILL OF QUANTITIES

B - 2.1 ARCHITECTUAL AND STRUCTURAL WORKS

Bill No. 2 OFFICE BUILDING (STAFF OFFICE, DRIVER ROOM & TOILETS)

Sr. No	M.R.S 2nd BI-Annual 2021 (Chap/Item)	Description	Unit	Quantity	Rate (Rs.)		Amount (Rs)
28	12/50	Providing and fixing 1½" thick **solid core flush doo**r shutter sterling make or equivalent with commercial ply (5 mm thick) on both sides double pressed and deodar wood lipping 1½" x ⅜" around shutter including chromium plated fitting, iron hinges ***without aluminium kick plate 22 SWG on both sides and finger plate*** complete in all respect.	Sft.	329.00			
29	12/58 (b)	Providing and fixing **ornamental wooden architrave** 3" x (1½" tapered to ¼") all along the door frame complete in all respect.					
		Deodar wood architrave	Sft.	419.00			
30	12/21	Providing and fixing, approved quality **mortice lock** complete in all respect.	Each.	16.00			
31	12/18 (i)	Providing and fixing Iron **sliding bolt**, 10" long complete in all respect.	Each.	9.00			

PUNJAB INTERMEDIATE CITIES IMPROVEMENT INVESTMENT PROGRAM (PICIIP)

MISCELLANEOUS CIVIL WORKS FOR PARKING SHEDS AT MUBARAK PURA CAPITAL ROAD, SIALKOT

OFFICE BUILDING (STAFF OFFICE, DRIVER ROOM & TOILETS)
BILL OF QUANTITIES

B - 2.1 ARCHITECTUAL AND STRUCTURAL WORKS

Bill No. 2 OFFICE BUILDING (STAFF OFFICE, DRIVER ROOM & TOILETS)

Sr. No	M.R.S 2nd BI-Annual 2021 (Chap/Item)	Description	Unit	Quantity	Rate (Rs.)		Amount (Rs)
32	13/7 (a)	French polishing complete:- on new work	100 Sft.	3.00			
33	13/5 (c)	Preparing surface and painting of **doors and windows** any type (including edges):- 03-coats	100 Sft.	1.00			
34	13/31	Preparing surface and painting with three (03) coats **Emulsion paint** complete in all respect.	100 Sft.	66.00			
35	13/32A	Providing and applying **weather shield paint** of approved quality on external surface of building including preparation of surface, application of primer complete in all respect: ***(02-Coats)***	100 Sft.	41.00			

PUNJAB INTERMEDIATE CITIES IMPROVEMENT INVESTMENT PROGRAM (PICIIP)

MISCELLANEOUS CIVIL WORKS FOR PARKING SHEDS AT MUBARAK PURA CAPITAL ROAD, SIALKOT

OFFICE BUILDING (STAFF OFFICE, DRIVER ROOM & TOILETS)
BILL OF QUANTITIES

B - 2.1 ARCHITECTUAL AND STRUCTURAL WORKS

Bill No. 2 OFFICE BUILDING (STAFF OFFICE, DRIVER ROOM & TOILETS)

Sr. No	M.R.S 2nd BI-Annual 2021 (Chap/Item)	Description	Unit	Quantity	Rate (Rs.)		Amount (Rs)
36	25/51	Providing and fixing all types of partly fixed and partly ***openable glazed anodised bronze colour aluminium doors,*** using deluxe section, having chowkat frame of size 40 x 100 mm (1½" x 4") and leaf frame of 60x40mm (2½"x1½") wide all of aluminium section thickness 1.6mm thick including 5mm thick imported tinted sections glass with aluminium triangular gola and rubber gasket to support the glass and leaf edging, using approved standard fittings, locks, 3" (75 mm) wide long handles etc., and hardware any required as approved by the engineer in-charge	Sft.	108.00			

PUNJAB INTERMEDIATE CITIES IMPROVEMENT INVESTMENT PROGRAM (PICIIP)

MISCELLANEOUS CIVIL WORKS FOR PARKING SHEDS AT MUBARAK PURA CAPITAL ROAD, SIALKOT

OFFICE BUILDING (STAFF OFFICE, DRIVER ROOM & TOILETS)
BILL OF QUANTITIES

B - 2.1 ARCHITECTUAL AND STRUCTURAL WORKS

Bill No. 2 OFFICE BUILDING (STAFF OFFICE, DRIVER ROOM & TOILETS)

Sr. No	M.R.S 2nd BI-Annual 2021 (Chap/Item)	Description	Unit	Quantity	Rate (Rs.)		Amount (Rs)
37	25/52+ 25/53	Providing and fixing all types of glazed **aluminium window**s of anodized champagne colour partly fixed and party sliding using deluxe section of approved manufacturer having Frame of size100 mm x 30 mm using frame at bottom, at topand side leaf leaf frame sections of 60mm x 23mm at top & bottom and size 45mm x 25mm at centerand size 45mm x 25mm at sides, Jali leaf frame size 43mm x 13mm i/c fine quality aluminium jali, 5mm thick imported tinted glass with rubber gasket using approved standard latches, wheel, stopper, brush channel angle joint and hardware etc. complete in all respect. (2 mm thick)	Sft.	216.00			
		Total MRS					
38	RA-01	Demolition of ***Existing Structures*** including disposal of salvage materials upto any lift & lead, including ***Stacking/ Handing over re-useable material to the Employer,*** complete in all respects or as directed by the Engineer. ***(Composite Rate Building Covered Area)***	Sft.	1,033.00			

PUNJAB INTERMEDIATE CITIES IMPROVEMENT INVESTMENT PROGRAM (PICIIP)

MISCELLANEOUS CIVIL WORKS FOR PARKING SHEDS AT MUBARAK PURA CAPITAL ROAD, SIALKOT

OFFICE BUILDING (STAFF OFFICE, DRIVER ROOM & TOILETS)
BILL OF QUANTITIES

B - 2.1 ARCHITECTUAL AND STRUCTURAL WORKS

Bill No. 2 OFFICE BUILDING (STAFF OFFICE, DRIVER ROOM & TOILETS)

Sr. No	M.R.S 2nd BI-Annual 2021 (Chap/Item)	Description	Unit	Quantity	Rate (Rs.)		Amount (Rs)
39	RA-02	Demolition of ***Existing Structures*** including disposal of salvage materials upto any lift & lead, including stacking/ handing over re-useable material to the employer, complete in all respects or as directed by the Engineer. ***(Plat form Area)***	Sft.	1,195.00			
40	RA-03	Provide and apply 2-coats of ***cold applied rubberized bitumen*** of approved manufacture's @ 1kg/m²/coat over 0.75kg/m² primer coat (mixed with 6% water) respectively, over well prepared surfaces complete in all respects and /or as directed by the Engineer in charge.	Sft.	1,953.00			

PUNJAB INTERMEDIATE CITIES IMPROVEMENT INVESTMENT PROGRAM (PICIIP)

MISCELLANEOUS CIVIL WORKS FOR PARKING SHEDS AT MUBARAK PURA CAPITAL ROAD, SIALKOT

OFFICE BUILDING (STAFF OFFICE, DRIVER ROOM & TOILETS)
BILL OF QUANTITIES

B - 2.1 ARCHITECTUAL AND STRUCTURAL WORKS

Bill No. 2 OFFICE BUILDING (STAFF OFFICE, DRIVER ROOM & TOILETS)

Sr. No	M.R.S 2nd BI-Annual 2021 (Chap/Item)	Description	Unit	Quantity	Rate (Rs.)		Amount (Rs)
41	RA-04	Providing and laying ***8"x10"x1/4" thick, Ceramic Matt Tiles pre-polished (Local Origin) on floor*** in approved patterns over a bedding mortar of ¾" thick 1:2 cement sand mortar and jointing/filling with matching colour grout of white cement and colour pigment, complete in all respects as per the approval of the Engineer.	Sft.	450.00			
42	RA-05	Providing and laying ***8"x10"x1/4" thick, Ceramic Glazed Tiles pre-polished (Local Origin) Skirting/ Dado*** , in approved patterns laid in pigment over 1:2 cement sand mortar ¾" thick, including jointing/filling with matching colour grout of white cement and colour pigment, complete in all respects as per the approval of the Engineer.	Sft.	1,502.00			

PUNJAB INTERMEDIATE CITIES IMPROVEMENT INVESTMENT PROGRAM (PICIIP)

MISCELLANEOUS CIVIL WORKS FOR PARKING SHEDS AT MUBARAK PURA CAPITAL ROAD, SIALKOT

OFFICE BUILDING (STAFF OFFICE, DRIVER ROOM & TOILETS)
BILL OF QUANTITIES

B - 2.1 ARCHITECTUAL AND STRUCTURAL WORKS

Bill No. 2 OFFICE BUILDING (STAFF OFFICE, DRIVER ROOM & TOILETS)

Sr. No	M.R.S 2nd BI-Annual 2021 (Chap/Item)	Description	Unit	Quantity	Rate (Rs.)		Amount (Rs)
43	RA-06	Providing and laying ***12"x12"x¾" thick China Verona*** Marble of approved quality, colour, shade and texture, on ***floor*** laid over ¾" thick bedding of cement sand mortar 1:2, including grinding and chemical polishing, jointed and grouted with white cement mixed with imported matching colour pigment, complete in all respect as shown on the drawings and/or as directed by the Engineer.	Sft.	1,360.00			
44	RA-07	Providing and fixing of ***12"x4"x½" Skirting China Verona Marble*** , set with neat cement paste over ¾" thick 1:2 cement sand base plaster, including grinding and chemical polishing, jointed and grouted with white cement mixed with pigment. complete in all respects as per the approval of the Engineer.	Sft.	117.00			

PUNJAB INTERMEDIATE CITIES IMPROVEMENT INVESTMENT PROGRAM (PICIIP)

MISCELLANEOUS CIVIL WORKS FOR PARKING SHEDS AT MUBARAK PURA CAPITAL ROAD, SIALKOT

OFFICE BUILDING (STAFF OFFICE, DRIVER ROOM & TOILETS)
BILL OF QUANTITIES

B - 2.1 ARCHITECTUAL AND STRUCTURAL WORKS

Bill No. 2 OFFICE BUILDING (STAFF OFFICE, DRIVER ROOM & TOILETS)

Sr. No	M.R.S 2nd BI-Annual 2021 (Chap/Item)	Description	Unit	Quantity	Rate (Rs.)		Amount (Rs)
45	RA-08	Providing and laying **pre-polished China Verona Slab** ¾" thick (single piece) of approved quality, colour, shade and texture for ***stair treads*** set over ¾" thick 1:2 cement sand mortar i/c rendering-off 2 No. non-skidding grooves (¾" wide and ¼" deep) in each steps, rounding-off front edge complete in all respect as shown in the drawings and/or as directed by the Engineer.	Sft.	37.00			
46	RA-09	Providing and laying ½" thick pre polished ***China Verona Slab*** of approved quality, colour, shade and texture for ***stair risers*** laid over ¾" thick 1:2 cement sand mortar, complete in all respect as shown on the drawings and/or as directed by the Engineer.	Sft.	19.00			

PUNJAB INTERMEDIATE CITIES IMPROVEMENT INVESTMENT PROGRAM (PICIIP)

MISCELLANEOUS CIVIL WORKS FOR PARKING SHEDS AT MUBARAK PURA CAPITAL ROAD, SIALKOT

OFFICE BUILDING (STAFF OFFICE, DRIVER ROOM & TOILETS)
BILL OF QUANTITIES

B - 2.1 ARCHITECTUAL AND STRUCTURAL WORKS

Bill No. 2 OFFICE BUILDING (STAFF OFFICE, DRIVER ROOM & TOILETS)

Sr. No	M.R.S 2nd BI-Annual 2021 (Chap/Item)	Description	Unit	Quantity	Rate (Rs.)		Amount (Rs)
47	RA-10	Providing and laying pre-polished ***China Verona Slab ¾" thick*** rendered with bevelled edges on ***counter top*** set over ¾" thick 1:2 cement sand mortar and exposed joints filled with matching colour grout of white cement and colour pigment. complete in all respect as shown on the drawings and/or as directed by the Engineer. *(Before execution of below mentioned itemized works the Contractor shall provide the shop drawings for the prior approval of the Engineer)*	Sft.	69.00			
48	RA-11	Providing and fixing ***Diamond Mesh (24 SWG)*** , with concrete nails at location of concrete interfacing masonry complete in all respect as shown on the drawings, and/ or as directed by the Engineer.	Sft.	627.00			

PUNJAB INTERMEDIATE CITIES IMPROVEMENT INVESTMENT PROGRAM (PICIIP)

MISCELLANEOUS CIVIL WORKS FOR PARKING SHEDS AT MUBARAK PURA CAPITAL ROAD, SIALKOT

OFFICE BUILDING (STAFF OFFICE, DRIVER ROOM & TOILETS)
BILL OF QUANTITIES

B - 2.1 ARCHITECTUAL AND STRUCTURAL WORKS

Bill No. 2 OFFICE BUILDING (STAFF OFFICE, DRIVER ROOM & TOILETS)

Sr. No	M.R.S 2nd BI-Annual 2021 (Chap/Item)	Description	Unit	Quantity	Rate (Rs.)		Amount (Rs)
49	RA-12	Providing, fabricating and fixing ***16 SWG M.S. Sheet*** **hollow pressed jamb frame** (factory primed) for doors welded with M.S. flat 10"x1½"x1/8" hold fasts i/c welding/ screwing 4" long iron hinges, filling 1:4 cement sand mortar for the jamb frame and embedding hold fast in the adjoining walls with 1:2:4 concrete, enamel painting etc. complete in all respects as shown on the drawings and/ or as directed by the Engineer, in-conformance with following sizes; ***10½" x 2½"***	Sft.	165.00			

PUNJAB INTERMEDIATE CITIES IMPROVEMENT INVESTMENT PROGRAM (PICIIP)

MISCELLANEOUS CIVIL WORKS FOR PARKING SHEDS AT MUBARAK PURA CAPITAL ROAD, SIALKOT

OFFICE BUILDING (STAFF OFFICE, DRIVER ROOM & TOILETS)
BILL OF QUANTITIES

B - 2.1 ARCHITECTUAL AND STRUCTURAL WORKS

Bill No. 2 OFFICE BUILDING (STAFF OFFICE, DRIVER ROOM & TOILETS)

Sr. No	M.R.S 2nd BI-Annual 2021 (Chap/Item)	Description	Unit	Quantity	Rate (Rs.)		Amount (Rs)
50	RA-13	Providing, fabricating and fixing 16 SWG M.S. Sheet hollow pressed jamb frame (factory primed) for doors welded with M.S. flat size 6"x1"x1/8", hold fasts i/c welding/ screwing 4" long iron hinges, filling concrete for the jamb frame and embedding hold fast in the adjoining walls with 1:2:4 concrete, enamel painting etc. complete in all respects as shown on the drawings and/ or as directed by the Engineer, in-conformance with following sizes. ***5½"x2½"***	Sft.	44.10			
51	RA-14	Providing, fabricating and fixing ***M.S Steel grill*** for windows neat to lines shown on the drawings, specifications and/ or as directed by the Engineer.	Kg.	590.00			
52	RA-80	Recovery of dismentalled works	lumpsum				
		Total Non MRS					
		Total (MRS + Non-MRS)					

PUNJAB INTERMEDIATE CITIES IMPROVEMENT INVESTMENT PROGRAM (PICIIP)

MISCELLANEOUS CIVIL WORKS FOR PARKING SHEDS AT MUBARAK PURA CAPITAL ROAD, SIALKOT

GUARD ROOM
BILL OF QUANTITIES

B - 2.1 ARCHITECTUAL AND STRUCTURAL WORKS
Bill No. 3 GUARD ROOM

Sr. No	M.R.S 2nd BI-Annual 2020 (Chap/Item)	Description	Unit	Quantity	Rate (Rs.)		Amount (Rs.)
					In Figures	In Words	
1	3/21(b)	Excavation in foundation of building, bridges and other structures, including dagbelling, dressing, refilling around structure with excavated earth, watering and rammiing lead upto one chain (30 m) and lift upto 5 ft. (1.5 m) b) upto 5 ft. (1.5 m)in ordinary soil	Cft	656.91			
2	3/41	Select Fill for specifications see the geotechnical rcommendations *** (Supplying clean and screened river or pit sand within 5chains (150 m).**	Cft	656.91			
3	26/42	TERMITE CONTROL TREATMENT foundations and floors complete in all respects as shown on the drawings/specifications and/or as directed by the Engineer. (Spraying anti -	SFT	508.20			
4	6/5(h)	Cement concrete plain including placing, compacting, finishing and curing complete (including screening and washing of stone aggregate): (i) 1500 psi Ratio (1:3:6)	Cft	41.10			

PUNJAB INTERMEDIATE CITIES IMPROVEMENT INVESTMENT PROGRAM (PICIIP)

MISCELLANEOUS CIVIL WORKS FOR PARKING SHEDS AT MUBARAK PURA CAPITAL ROAD, SIALKOT

GUARD ROOM
BILL OF QUANTITIES

B - 2.1 ARCHITECTUAL AND STRUCTURAL WORKS

Bill No. 3 GUARD ROOM

Sr. No	M.R.S 2nd BI-Annual 2020 (Chap/Item)	Description	Unit	Quantity	Rate (Rs.)		Amount (Rs.)
5	6/6(a)(ii)(3)	Providing and laying reinforced cement concrete (including prestressed concrete), using coarse sand and screened graded and washed aggregate, in required shape and design, including forms, moulds, shuttering, lifting, compacting, curing, rendering and finishing exposed surface, complete (but excluding the cost of steel reinforcement, its fabrication and placing in position, etc.):- (a)(ii) Reinforced cement concrete in slab of rafts / strip foundation, base slab of column and retaining walls; etc and other structural members other than those mentioned in 5(a) (i) above not requiring form work (i.e. horizental shuttering) complete in all respects:- 2500psi (Ratio 1:2:4)	Per Cft	115.17			

PUNJAB INTERMEDIATE CITIES IMPROVEMENT INVESTMENT PROGRAM (PICIIP)

MISCELLANEOUS CIVIL WORKS FOR PARKING SHEDS AT MUBARAK PURA CAPITAL ROAD, SIALKOT

GUARD ROOM
BILL OF QUANTITIES

B - 2.1 ARCHITECTUAL AND STRUCTURAL WORKS

Bill No. 3 GUARD ROOM

Sr. No	M.R.S 2nd BI-Annual 2020 (Chap/Item)	Description	Unit	Quantity	Rate (Rs.)		Amount (Rs.)
6	6/6(a)(i)(3)	(a) (i) Reinforced cement concrete in roof slab, beams, columns lintels, girders and other structural members laid in situ or precast laid in position, or prestressed members cast in situ, complete in all respects:- 2500psi (Ratio 1:2:4)	Per Cft	87.56			
7	6/9('c)	Fabrication of mild steel reinforcement for cement concrete, including cutting, bending, laying in position, making joints and fastenings, including cost of binding wire and labour charges for binding of steel reinforcement (also includes removal of rust from bars):- ('c) Deformed bars (Grade-60)	Tons	0.43			
8	7/4(i)	Pacca brick work in foundation and plinth in:- (Plinth protection) i) Cement, sand mortar:- Ratio 1:3 **Damp Proof Course**	Cft	175.26			

PUNJAB INTERMEDIATE CITIES IMPROVEMENT INVESTMENT PROGRAM (PICIIP)

MISCELLANEOUS CIVIL WORKS FOR PARKING SHEDS AT MUBARAK PURA CAPITAL ROAD, SIALKOT

GUARD ROOM
BILL OF QUANTITIES

B - 2.1 ARCHITECTUAL AND STRUCTURAL WORKS

Bill No. 3 GUARD ROOM

Sr. No	M.R.S 2nd BI-Annual 2020 (Chap/Item)	Description	Unit	Quantity	Rate (Rs.)		Amount (Rs.)
9	6/33(b)(i)	Providing and laying damp proof course (1.5" Thick) of cement concrete 1:2: 4(using cement, sand and shingle), including bitumen coating (2 Coats of Bitumen)	Sft	27.56			
10	6/35(b)(ii)b	Providing and laying vertical damp proof course with cement sand plaster (3/4" thick with 1:3 ratio) and bitumen coating (2 Coats of Bitumen)	Sft	36.75			
11	3/15 (i)	Filling, watering and ramming earth under floors:- ***with surplus earth from foundation, etc.***	1000 Cft.	0.10			
12	3/17 (a, b,c,d)	Transportation of ***Earth all types*** when the total distance including the lead covered in the item of work, is more than 1000 ft.(300 m)	1000 Cft.	0.20			
13	3/24 (a, b-i)	Compaction of **Earthwork** (soft, ordinary or hard soil) :-	1000 Cft.	0.20			
14	7/30	Supplying and filling ***sand under floor*** ; or plugging in wells.	100 Cft.	0.30			

PUNJAB INTERMEDIATE CITIES IMPROVEMENT INVESTMENT PROGRAM (PICIIP)

MISCELLANEOUS CIVIL WORKS FOR PARKING SHEDS AT MUBARAK PURA CAPITAL ROAD, SIALKOT

GUARD ROOM
BILL OF QUANTITIES

B - 2.1 ARCHITECTUAL AND STRUCTURAL WORKS
Bill No. 3 GUARD ROOM

Sr. No	M.R.S 2nd BI-Annual 2020 (Chap/Item)	Description	Unit	Quantity	Rate (Rs.)		Amount (Rs.)
		Concrete.					
15	6/5 (i)	Cement **Concrete plain** including placing, compacting, finishing and curing complete (including screening and washing of stone aggregate)					
		Ratio 1:4:8 (under floor.)	100 Cft.	0.50			
	6/5 (f)	*Ratio 1:2:4 (under floor.)*	100 Cft.	0.10			
		Brickwork.					
16	7/5.(i)	Pacca brick work in ground floor:-:- Cement, sand mortar:-**Ratio 1:5**	100 Cft.	2.00			
		Sub total: Brickwork					
		Roofing.					
17	9/5-9/12	Providing and laying 9" x 4½" x 1½" (225mm x 113mm x 40 mm) **brick tiles** grouted with cement sand 1:3, laid over 4"(100 mm) (average) thick earth with 1" (25 mm) mud plaster without Bhoosaw, grouted with cement sand 1:3 on top of **RCC roof slab**, ***excluding c****ost of 34 lbs. per %Sft. or 1.72 Kg/Sq.m bitumen coating sand blinded***.**					
		First Floor	100 Sft.	1.00			

PUNJAB INTERMEDIATE CITIES IMPROVEMENT INVESTMENT PROGRAM (PICIIP)

MISCELLANEOUS CIVIL WORKS FOR PARKING SHEDS AT MUBARAK PURA CAPITAL ROAD, SIALKOT

GUARD ROOM
BILL OF QUANTITIES

B - 2.1 ARCHITECTUAL AND STRUCTURAL WORKS
Bill No. 3 GUARD ROOM

Sr. No	M.R.S 2nd BI-Annual 2020 (Chap/Item)	Description	Unit	Quantity	Rate (Rs.)		Amount (Rs.)
18	26/37 (ii)	Supplying and laying **polythene sheet** over D.P.C. under floors and on roofs, etc.					
		500 gauge	Sft.	142.00			
19	9/45 (c)	Providing and Laying Insulation material of ***Extruded Polystyrene XPS*** in Rigid Insulation / Foam Board on roof or walls, Density 32-38Kg/M3, compressive strength 250-400 kpa, R-value 5 per inch thickness and water absorption (1% by volume, cell structure colored cell) i/c cutting and placing in position complete in all respect.					
		2" thick	100 Sft.	1.00			
20	9/15	Construction of Khuras on roof 2' x 2' x 6"	Each.	1.00			
		Flooring.					

PUNJAB INTERMEDIATE CITIES IMPROVEMENT INVESTMENT PROGRAM (PICIIP)

MISCELLANEOUS CIVIL WORKS FOR PARKING SHEDS AT MUBARAK PURA CAPITAL ROAD, SIALKOT

GUARD ROOM
BILL OF QUANTITIES

B - 2.1 ARCHITECTUAL AND STRUCTURAL WORKS
Bill No. 3 GUARD ROOM

Sr. No	M.R.S 2nd BI-Annual 2020 (Chap/Item)	Description	Unit	Quantity	Rate (Rs.)		Amount (Rs.)
21	10/15 (e)	Providing and laying **2" thick topping** of cement concrete 1:2:4, including surface	100 Sft.	1.00			
22	10/42 (a)	Providing and fixing size 1½" x 3/8" (40 x 10 mm) **marble strip** of any shade for dividing the mosaic flooring into panels.	Rft.	53.00			
		Surface Rendering.					
23	11/10 (b)	Cement plaster ratio 1:3 under **soffit of R.C.C. roof slabs** only, upto 20' height. 3/8" (10 mm) thick.	100 Sft.	1.00			
24	11/9 (b)	Cement plaster 1:4 on **internal walls** upto 20' (6.00 m) height and ½" (13 mm) thick.	100 Sft.	2.00			
25	11/9 (c)	Cement plaster 1:4 on **internal walls** upto 20' (6.00 m) height and ¾" (20 mm) thick.	100 Sft.	1.00			
26	11/9 (c)	Cement plaster 1:4 on ***external walls*** upto 20' (6.00 m) height and ¾" (20 mm) thick.	100 Sft.	2.00			

PUNJAB INTERMEDIATE CITIES IMPROVEMENT INVESTMENT PROGRAM (PICIIP)

MISCELLANEOUS CIVIL WORKS FOR PARKING SHEDS AT MUBARAK PURA CAPITAL ROAD, SIALKOT

GUARD ROOM
BILL OF QUANTITIES

B - 2.1 ARCHITECTUAL AND STRUCTURAL WORKS
Bill No. 3 GUARD ROOM

Sr. No	M.R.S 2nd BI-Annual 2020 (Chap/Item)	Description	Unit	Quantity	Rate (Rs.)		Amount (Rs.)
27	11/16 (a)	Cement ***pointing struck joints*** , on walls, upto 20' (6.00 m) hiehgt:- ***ratio 1:2***	100 Sft.	4.00			
		Wood Work.					
		Painting & Varnishing.					
28	13/31	Preparing surface and painting with three (03) coats **Emulsion paint** complete in all respect.	100 Sft.	4.00			
29	13/32A	Providing and applying **weather shield paint** of approved quality on external surface of building including preparation of surface, application of primer complete in all respect: ***(02-Coats)***	100 Sft.	2.00			
		Iron Work.					

PUNJAB INTERMEDIATE CITIES IMPROVEMENT INVESTMENT PROGRAM (PICIIP)

MISCELLANEOUS CIVIL WORKS FOR PARKING SHEDS AT MUBARAK PURA CAPITAL ROAD, SIALKOT

GUARD ROOM
BILL OF QUANTITIES

B - 2.1 ARCHITECTUAL AND STRUCTURAL WORKS

Bill No. 3 GUARD ROOM

Sr. No	M.R.S 2nd BI-Annual 2020 (Chap/Item)	Description	Unit	Quantity	Rate (Rs.)		Amount (Rs.)
30	25/52+ 25/53	Providing and fixing all types of glazed **aluminium window**s of anodized champagne colour partly fixed and party sliding using deluxe section of approved manufacturer having Frame of size100 mm x 30 mm using frame at bottom, at topand side leaf leaf frame sections of 60mm x 23mm at top & bottom and size 45mm x 25mm at centerand size 45mm x 25mm at sides, Jali leaf frame size 43mm x 13mm i/c fine quality aluminium jali, 5mm thick imported tinted glass with rubber gasket using approved standard latches, wheel, stopper, brush channel angle joint and hardware etc. complete in all respect. (2 mm thick)	Sft.	34.00			
		TOTAL MRS ITEMS FOR 02					

PUNJAB INTERMEDIATE CITIES IMPROVEMENT INVESTMENT PROGRAM (PICIIP)

MISCELLANEOUS CIVIL WORKS FOR PARKING SHEDS AT MUBARAK PURA CAPITAL ROAD, SIALKOT

GUARD ROOM
BILL OF QUANTITIES

B - 2.1 ARCHITECTUAL AND STRUCTURAL WORKS
Bill No. 3 GUARD ROOM

Sr. No	M.R.S 2nd BI-Annual 2020 (Chap/Item)	Description	Unit	Quantity	Rate (Rs.)		Amount (Rs.)
II		**NON MRS ITEMS**					
31	RA-03	**Roofing.** Provide and apply 2-coats of ***cold applied rubberized bitumen*** of approved manufacture's @ 1kg/m²/coat over 0.75kg/m² primer coat (mixed with 6% water) respectively, over well prepared surfaces complete in all respects and /or as directed by the Engineer in charge.	Sft.	71.00			
32	RA-06	**Flooring.** Providing and laying ***12"x12"x¾" thick China Verona*** Marble of approved quality, colour, shade and texture, on ***floor*** laid over ¾" thick bedding of cement sand mortar 1:2, including grinding and chemical polishing, jointed and grouted with white cement mixed with imported matching colour pigment, complete in all respect as shown on the drawings and/or as directed by the Engineer.	Sft.	69.00			

PUNJAB INTERMEDIATE CITIES IMPROVEMENT INVESTMENT PROGRAM (PICIIP)

MISCELLANEOUS CIVIL WORKS FOR PARKING SHEDS AT MUBARAK PURA CAPITAL ROAD, SIALKOT

GUARD ROOM
BILL OF QUANTITIES

B - 2.1 ARCHITECTUAL AND STRUCTURAL WORKS
Bill No. 3 GUARD ROOM

Sr. No	M.R.S 2nd BI-Annual 2020 (Chap/Item)	Description	Unit	Quantity	Rate (Rs.)		Amount (Rs.)
33	RA-07	Providing and fixing of ***12"x4"x½" Skirting China Verona Marble*** , set with neat cement paste over ¾" thick 1:2 cement sand base plaster, including grinding and chemical polishing, jointed and grouted with white cement mixed with pigment. complete in all respects as per the approval of the Engineer.	Sft.	8.00			
34	RA-08	Providing and laying **pre-polished China Verona Slab** ¾" thick (single piece) of approved quality, colour, shade and texture for ***stair treads*** set over ¾" thick 1:2 cement sand mortar i/c rendering-off 2 No. non-skidding grooves (¾" wide and ¼" deep) in each steps, rounding-off front edge complete in all respect as shown in the drawings and/or as directed by the Engineer.	Sft.	9.00			

PUNJAB INTERMEDIATE CITIES IMPROVEMENT INVESTMENT PROGRAM (PICIIP)

MISCELLANEOUS CIVIL WORKS FOR PARKING SHEDS AT MUBARAK PURA CAPITAL ROAD, SIALKOT

GUARD ROOM
BILL OF QUANTITIES

B - 2.1 ARCHITECTUAL AND STRUCTURAL WORKS
Bill No. 3 GUARD ROOM

Sr. No	M.R.S 2nd BI-Annual 2020 (Chap/Item)	Description	Unit	Quantity	Rate (Rs.)		Amount (Rs.)
35	RA-09	Providing and laying ½" thick pre polished ***China Verona Slab*** of approved quality, colour, shade and texture for ***stair risers*** laid over ¾" thick 1:2 cement sand mortar, complete in all respect as shown on the drawings and/or as directed by the Engineer.	Sft.	5.00			
		Iron Work. *(Before execution of below mentioned itemized works the Contractor shall provide the shop drawings for the prior approval of the Engineer)*					
36	RA-11	Providing and fixing ***Diamond Mesh (24 SWG)*** , with concrete nails at location of concrete interfacing masonry complete in all respect as shown on the drawings, and/ or as directed by the Engineer.	Sft.	32.00			
37	RA-14	Providing, fabricating and fixing ***M.S Steel grill*** for windows neat to lines shown on the drawings, specifications and/ or as directed by the Engineer.	Kg.	92.00			

PUNJAB INTERMEDIATE CITIES IMPROVEMENT INVESTMENT PROGRAM (PICIIP)

MISCELLANEOUS CIVIL WORKS FOR PARKING SHEDS AT MUBARAK PURA CAPITAL ROAD, SIALKOT

GUARD ROOM
BILL OF QUANTITIES

B - 2.1 ARCHITECTUAL AND STRUCTURAL WORKS

Bill No. 3 GUARD ROOM

Sr. No	M.R.S 2nd BI-Annual 2020 (Chap/Item)	Description	Unit	Quantity	Rate (Rs.)		Amount (Rs.)
38	RA-15	Providing and fixing of 16 SWG M.S. Sheet panel door comprising of M.S frame & shutter (factory primmed) welded with 1½"x1½"x¼" M.S angle frame, i/c locking arrangement, eryls, hinges, enamel painting etc. complete in all respects as per drawings and specifications and/or as directed by the Engineer.	Sft.	18.00			
	TOTAL NON-MRS ITEMS FOR 02						
	TOTAL (MRS + Non-MRS)						

PUNJAB INTERMEDIATE CITIES IMPROVEMENT INVESTMENT PROGRAM (PICIIP)

MISCELLANEOUS CIVIL WORKS FOR PARKING SHEDS AT MUBARAK PURA CAPITAL ROAD, SIALKOT

ENTRY GATE
BILL OF QUANTITIES

B - 2.1 ARCHITECTUAL AND STRUCTURAL WORKS

Bill No. 4 ENTRY GATE

Item No.	*Ref. MRS, 2nd Bi-Annual 2021 Chap. / Item No*	*Description*	*Unit*	*Qty*	*Rate (Rs.)*		*Amount (Rs.)*
					In Figures	**In Words**	
		Surface Rendering.					
1	11/9 (c)	Cement plaster 1:4 on ***external walls*** upto 20' (6.00 m) height and ¾" (20 mm) thick.	100 Sft.	2.00			
		Painting & Varnishing.					
2	13/5 (d)	Preparing surface and painting guard bars, ***gates of iron bars, gratings, railing*** (including standards,braces, etc.) and in similar open work:- (***03-Coats)***	100 Sft.	2.00			
3	13/32A	Providing and applying **weather shield paint** of approved quality on external surface of building including preparation of surface, application of primer complete in all respect: ***(02-Coats)***	100 Sft.	2.00			

PUNJAB INTERMEDIATE CITIES IMPROVEMENT INVESTMENT PROGRAM (PICIIP)

MISCELLANEOUS CIVIL WORKS FOR PARKING SHEDS AT MUBARAK PURA CAPITAL ROAD, SIALKOT

ENTRY GATE
BILL OF QUANTITIES

B - 2.1 ARCHITECTUAL AND STRUCTURAL WORKS

Bill No. 4 ENTRY GATE

Item No.	*Ref. MRS, 2nd Bi-Annual 2021 Chap. / Item No*	*Description*	*Unit*	*Qty*	*Rate (Rs.)*		*Amount (Rs.)*
4	25/9, 25/11	**Iron Work.** Small ***iron work***, such as gusset plates, knees, bends,stirrups, straps, rings, etc. including cutting, drilling,riveting, handling, assembling and fixing; including erection in position. **TOTAL MRS ITEMS**	100 Kg.	6.00			
		TOTOAL FOR 02-NOS ENT. GATES					

PUNJAB INTERMEDIATE CITIES IMPROVEMENT INVESTMENT PROGRAM (PICIIP)

MISCELLANEOUS CIVIL WORKS FOR PARKING SHEDS AT MUBARAK PURA CAPITAL ROAD, SIALKOT

PRE-ENGINEERED PARKING SHED BUTTERFLY STYLE

BILL OF QUANTITIES

B - 2.1 ARCHITECTUAL AND STRUCTURAL WORKS

Bill No. 5 Cost of Prefabricated Steel Structre

Sr. No	M.R.S 2nd BI-Annual 2020 (Chap/Item)	Description	Unit	Quantity	Rate (Rs)		Amount (Rs)
					In Figures	In Words	
1	RA-100	Supply, installation and transportation of pre-engineered steel building including steel coloumn (column web size525 x 5 & column flange size 200 x 10), Rafter (Rafter web size 525 x 300 x 4 & Rafter flange size 175 x 8), Roof Purlins (Purlin section size 60 x 200 x 1.5), 0.5 thick pre-painted sheet at roof area and nut bolt etc complete in all respect. (32'-0" x 105'-0" x 15'-0" clear height) All dimesion are in mm unless otherwise specified.	Sft	3,360.00			
2	RA-101	Supply, installation and transportation of pre-engineered steel building including steel coloumn (column web size 525 x 5 & column flange size 200 x 10), Rafter (Rafter web size 525 x 300 x 4 & Rafter flange size 175 x 8), Roof Purlins (Purlin section size 60 x 200 x 1.5), 0.5 thick pre-painted sheet at roof area and nut bolt etc complete in all respect. (32'-0" x 240'-0" x 15'-0" clear height) All dimesion are in mm unless otherwise specified.	Sft	7,680.00			

PUNJAB INTERMEDIATE CITIES IMPROVEMENT INVESTMENT PROGRAM (PICIIP)

MISCELLANEOUS CIVIL WORKS FOR PARKING SHEDS AT MUBARAK PURA CAPITAL ROAD, SIALKOT

PRE-ENGINEERED PARKING SHED BUTTERFLY STYLE

BILL OF QUANTITIES

B - 2.1 ARCHITECTUAL AND STRUCTURAL WORKS

Bill No. 5 Cost of Prefabricated Steel Structre

Sr. No	M.R.S 2nd BI-Annual 2020 (Chap/Item)	Description	Unit	Quantity	Rate (Rs)		Amount (Rs)
3	RA-102	Supply, installation and transportation of pre-engineered steel building including steel coloumn (column web size 525 x 5 & column flange size 200 x 10), Rafter (Rafter web size 525 x 300 x 4 & Rafter flange size 175 x 8), Roof Purlins (Purlin section size 60 x 200 x 1.5), 0.5 thick pre-painted sheet at roof area and nut bolt etc complete in all respect. (32'-0" x 165'-0" x 15'-0")	Sft	5,280.00			
4	RA-103	Supply, installation and transportation of pre-engineered steel building including steel coloumn (column web size 500 x 4 & column flange size 175 x 8), Rafter (Rafter web size 450 x 250 x 4 & Rafter flange size 150 x 6), Roof Purlins (Purlin section size 60 x 200 x 1.5mm), 0.5 mm thick pre-painted sheet at roof area and nut bolt etc complete in all respect. (25'-0" x 165'-0" x 15'-0") All dimesion are in mm unless otherwise specified.	Sft	4,125.00			

PUNJAB INTERMEDIATE CITIES IMPROVEMENT INVESTMENT PROGRAM (PICIIP)

MISCELLANEOUS CIVIL WORKS FOR PARKING SHEDS AT MUBARAK PURA CAPITAL ROAD, SIALKOT

PRE-ENGINEERED PARKING SHED BUTTERFLY STYLE

BILL OF QUANTITIES

B - 2.1 ARCHITECTUAL AND STRUCTURAL WORKS

Bill No. 5 Cost of Prefabricated Steel Structre

Sr. No	M.R.S 2nd BI-Annual 2020 (Chap/Item)	Description	Unit	Quantity	Rate (Rs)		Amount (Rs)
5	RA-104	Supply, installation and transportation of pre-engineered steel building including steel coloumn (column web size 525 x 5 & column flange size 200 x 10), Rafter (Rafter web size 525 x 300 x 4 & Rafter flange size 175 x 8), Roof Purlins (Purlin section size 60 x 200 x 1.5mm), 0.5 mm thick pre-painted sheet at roof area and nut bolt etc complete in all respect. (32'-0" x 30'-0" x 15'-0" clear height) All dimesion are in mm unless otherwise specified.	Sft	960.00			
6	RA-105	Supply, installation and transportation of pre-engineered steel building including steel coloumn (column web size 350 x 4 & column flange size 150 x 6), Rafter (Rafter web size 350 x 200 x 4 & Rafter flange size 150 x 6), Roof Purlins (Purlin section size 60 x 200 x 1.5), 0.5 thick pre-painted sheet at roof area and nut bolt etc complete in all respect. (16'-0" x 96'-0" x 10'-0" clear height) All dimesion are in mm unless otherwise specified.	Sft	1,536.00			

PUNJAB INTERMEDIATE CITIES IMPROVEMENT INVESTMENT PROGRAM (PICIIP)

MISCELLANEOUS CIVIL WORKS FOR PARKING SHEDS AT MUBARAK PURA CAPITAL ROAD, SIALKOT

PRE-ENGINEERED PARKING SHED BUTTERFLY STYLE

BILL OF QUANTITIES

B - 2.1 ARCHITECTUAL AND STRUCTURAL WORKS

Bill No. 5 Cost of Prefabricated Steel Structre

Sr. No	M.R.S 2nd BI-Annual 2020 (Chap/Item)	Description	Unit	Quantity	Rate (Rs)		Amount (Rs)
7	RA-106	Supply, installation and transportation of pre-engineered steel building including steel coloumn (column web size 350 x 4 & column flange size 150 x 6), Rafter (Rafter web size 350 x 200 x 4 & Rafter flange size 150 x 6), Roof Purlins (Purlin section size 60 x 200 x 1.5), 0.5 thick pre-painted sheet at roof area and nut bolt etc complete in all respect. (16'-0" x 56'-0" x 10'-0") All dimesion are in mm unless otherwise specified.	Sft	896.00			
		TOTAL NON-MRS ITEMS					

PUNJAB INTERMEDIATE CITIES IMPROVEMENT INVESTMENT PROGRAM (PICIIP)

MISCELLANEOUS CIVIL WORKS FOR PARKING SHEDS AT MUBARAKPURA CAPITAL ROAD, SIALKOT

BILL OF QUANTITIES

B - 2.1 ARCHITECTUAL AND STRUCTURAL WORKS

Bill No. 6 PARKING SHEDS PADESTAL

Sr. No	M.R.S 2nd Bl-Annual 2021 (Chap/Item)	Description	Unit	Quantity	Rate (Rs)		Amount (Rs)
					In Figures	In Words	
1		Excavation in foundation of building, bridges and other structures, including dagbelling, dressing, refilling around structure with excavated earth, watering and rammiing lead upto one chain (30 m) and lift upto 5 ft. (1.5 m)					
	3/21(b)	b) upto 5 ft. (1.5 m)in ordinary soil	Cft	30,958.20			
2	3/41	Select Fill for specifications see the geotechnical rcommendations *** (Supplying clean and screened river or pit sand within 5chains (150 m).**	Cft	14905.8			
3	6/5(h)	Cement concrete plain including placing, compacting, finishing and curing complete (including screening and washing of stone aggregate):					
		(i) 1500 psi Ratio (1:3:6)	Cft	1,296.59			

PUNJAB INTERMEDIATE CITIES IMPROVEMENT INVESTMENT PROGRAM (PICIIP)

MISCELLANEOUS CIVIL WORKS FOR PARKING SHEDS AT MUBARAKPURA CAPITAL ROAD, SIALKOT

BILL OF QUANTITIES

B - 2.1 ARCHITECTUAL AND STRUCTURAL WORKS

Bill No. 6 PARKING SHEDS PADESTAL

Sr. No	M.R.S 2nd Bl-Annual 2021 (Chap/Item)	Description	Unit	Quantity	Rate (Rs)		Amount (Rs)
4		Providing and laying reinforced cement concrete (including prestressed concrete), using coarse sand and screened graded and washed aggregate, in required shape and design, including forms, moulds, shuttering, lifting, compacting, curing, rendering and finishing exposed surface, complete (but excluding the cost of steel reinforcement, its fabrication and placing in position, etc.):-					
	6/6(a)(ii)(3)	(a)(ii) Reinforced cement concrete in slab of rafts / strip foundation, base slab of column and retaining walls; etc and other structural members other than those mentioned in 5(a) (i) above not requiring form work (i.e. horizental shuttering) complete in all respects:- 2500psi (Ratio 1:2:4)	Per Cft	6,244.50			
	6/6(a)(i)(3)	(a) (i) Reinforced cement concrete in roof slab, beams, columns lintels, girders and other structural members laid in situ or precast laid in position, or prestressed members cast in situ, complete in all respects:- 2500psi (Ratio 1:2:4)	Per Cft	972.56			

PUNJAB INTERMEDIATE CITIES IMPROVEMENT INVESTMENT PROGRAM (PICIIP)

MISCELLANEOUS CIVIL WORKS FOR PARKING SHEDS AT MUBARAKPURA CAPITAL ROAD, SIALKOT

BILL OF QUANTITIES

B - 2.1 ARCHITECTUAL AND STRUCTURAL WORKS

Bill No. 6 PARKING SHEDS PADESTAL

Sr. No	M.R.S 2nd Bi-Annual 2021 (Chap/Item)	Description	Unit	Quantity	Rate (Rs)		Amount (Rs)
5		Fabrication of mild steel reinforcement for cement concrete, including cutting, bending, laying in position, making joints and fastenings, including cost of binding wire and labour charges for binding of steel reinforcement (also includes removal of rust from bars):-					
	6/9('c)	('c) Deformed bars (Grade-60)	Tons	22.80			
Total Amount							

PUNJAB INTERMEDIATE CITIES IMPROVEMENT INVESTMENT PROGRAM (PICIIP)
MISCELLANEOUS CIVIL WORKS FOR PARKING SHEDS AT MUBARAKPURA CAPITAL ROAD, SIALKOT

DRAIN
BILL OF QUANTITIES

B - 2.1 ARCHITECTUAL AND STRUCTURAL WORKS
Bill No. 7 DRAIN

Sr. No	M.R.S 2nd BI-Annual 2021 (Chap/Item)	Description	Unit	Quantity	Rate (Rs)		Amount (Rs)
					In Figures	In Words	
1	3/21(b)	Excavation in foundation of building, bridges and other structures, including dagbelling, dressing, refilling around structure with excavated earth, watering and rammiing lead upto one chain (30 m) and lift upto 5 ft. (1.5 m) b) upto 5 ft. (1.5 m)in ordinary soil	Cft	9,766.58			
2	7/30	Select Fill for specifications see the geotechnical rcommendations *** (Supplying and filling sand under floor or plugging in wells).**	Cft	6511.05			
3	6/5(h)	Cement concrete plain including placing, compacting, finishing and curing complete (including screening and washing of stone aggregate): (i) 1500 psi Ratio (1:3:6)	Cft	417.38			

PUNJAB INTERMEDIATE CITIES IMPROVEMENT INVESTMENT PROGRAM (PICIIP)
MISCELLANEOUS CIVIL WORKS FOR PARKING SHEDS AT MUBARAKPURA CAPITAL ROAD, SIALKOT

DRAIN
BILL OF QUANTITIES

B - 2.1 ARCHITECTUAL AND STRUCTURAL WORKS
Bill No. 7 DRAIN

Sr. No	M.R.S 2nd BI-Annual 2021	Description	Unit	Quantity	Rate (Rs)		Amount (Rs)
4	6/6(a)(ii)(2)	Providing and laying reinforced cement concrete (including prestressed concrete), using coarse sand and screened graded and washed aggregate, in required shape and design, including forms, moulds, shuttering, lifting, compacting, curing, rendering and finishing exposed surface, complete (but excluding the cost of steel reinforcement, its fabrication and placing in position, etc.):-					
		(a)(ii) Reinforced cement concrete in slab of rafts / strip foundation, base slab of column and retaining walls; etc and other structural members other than those mentioned in 5(a) (i) above not requiring form work (i.e. horizental shuttering) complete in all respects:-					
		3000psi	Per Cft	890.40			
5		(a) (i) Reinforced cement concrete in roof slab, beams, columns lintels, girders and other structural members laid in situ or precast laid in position, or prestressed members cast in situ, complete in all respects:-					
	6/6(a)(i)(2)	3000psi	Per Cft	2,671.20			

PUNJAB INTERMEDIATE CITIES IMPROVEMENT INVESTMENT PROGRAM (PICIIP)
MISCELLANEOUS CIVIL WORKS FOR PARKING SHEDS AT MUBARAKPURA CAPITAL ROAD, SIALKOT

DRAIN
BILL OF QUANTITIES

B - 2.1 ARCHITECTUAL AND STRUCTURAL WORKS
Bill No. 7 DRAIN

Sr. No	M.R.S 2nd BI-Annual 2021 (Chap/Item)	Description	Unit	Quantity	Rate (Rs)		Amount (Rs)
6	6/9('c)	Fabrication of mild steel reinforcement for cement concrete, including cutting, bending, laying in position, making joints and fastenings, including cost of binding wire and labour charges for binding of steel reinforcement (also includes removal of rust from bars):-					
		('c) Deformed bars (Grade-60)	Tons	9.70			
	22/9	Providing and fixing structural stee	Kg	363.80			
7	6/28	Providing embeding 10" (250 mm) wide ¼" (6 mm) thick rubber water stopper in expansion joints of R.C.C. roof slab complete in all respect	ft	1332.6			
8	13/9(i)	Bitumen coating to plastered or cement concrete surface:- rate is multily by 2 for two coats					
		i)20 lbs. per 100 Sft. (9.07 Kg per Sq.m)	Sft	4,894.30			
Total Amount							

PUNJAB INTERMEDIATE CITIES IMPROVEMENT INVESTMENT PROGRAM (PICIIP)

MISCELLANEOUS CIVIL WORKS FOR PARKING SHEDS AT MUBARAK PURA CAPITAL ROAD, SIALKOT

ELECTRICAL WORKS (NON-MRS ITEMS)

BILL OF QUANTITIES

B - 2.2 ELECTRICAL WORKS
Bill No. 2 NON-MRS ITEMS

Sr. No.	M.R.S 2nd BI-Annual 2021 (Chap/Item)	Description	Unit	Qty.	Rate (Rs.)		Amount (Rs.)
					In Figures	In Words	
		The Electrical Works include design, supply, transportation, installation, testing and commissioning of the following items of works as mentioned in this BOQ (unless specifically stated otherwise) including all material, labour, tools, accessories, related civil works, etc., as required for proper completion of each item as per specifications unless otherwise mentioned. (Any necessary material not mentioned in specifications, electrical drawings and here in this BOQ required for proper installation, testing and commissioning of equipment and materials shall be included in BOQ rates. Bid price shall be final. No Separate payment will be made for any such material. The Contractor shall be bond to provided any such material after award of this contract for proper completion of the Electrical Installation Works.) Contractor is also advised to inform missing items (if any) in BoQ at time submitting the tender. Supply, transportaion, storage at site, installation, testing and commissioning of the following items of work (unless specifically stated otherwise) including all material, labour, tools, accessories, etc. required for proper completion of each item as per specifications unless otherwise mentioned. (Any necessary material not mentioned in specifications, electrical drawings and here in this BOQ required for proper installation, testing and commissioning of equipment and materials shall be included in BOQ rates.					
1(A)		**<u>POWER CABLE</u>**					
1.1(A)		Copper conductor PVC/PVC 600/1000V cables including sockets and connections at both ends with Cu/Brass glands, lugs ets alongwith all accessories. The cable shall be drawn in cable trench or clipped on the wall or pulled in cable tray/PVC pipes or as required or as shown on drawings. (Imported copper shall be used. Verified documentary evidence for source of copper & PVC shall be furnished prior to manufacturing)					
a)	RA-16	2 core 10 mm^2 (For Security Guard Room)	700	Rft.			
b)	RA-17	4 core 10 mm^2 (For Area Lighting)	5,100	Rft.			
c)	RA-18	4 core 25 mm^2 From MPB to DB-Office Building	90	Rft.			
d)	RA-19	4 core 50 mm^2 From Transformer to MPB	400	Rft.			

PUNJAB INTERMEDIATE CITIES IMPROVEMENT INVESTMENT PROGRAM (PICIIP)

MISCELLANEOUS CIVIL WORKS FOR PARKING SHEDS AT MUBARAK PURA CAPITAL ROAD, SIALKOT

ELECTRICAL WORKS (NON-MRS ITEMS)

BILL OF QUANTITIES

B - 2.2 ELECTRICAL WORKS
Bill No. 2 NON-MRS ITEMS

Sr. No.	M.R.S 2nd BI-Annual 2021 (Chap/Item)	Description	Unit	Qty.	Rate (Rs.)		Amount (Rs.)
					In Figures	In Words	
1.2(A)		PVC insulated 450/750 Volt grade (Green - Yellow) unarmoured copper cable laid direct in ground, pulled in PVC pipe already laid, on surface of wall or cable trays etc. sockets and connections at both ends with Cu/Brass, glands, lugs ets alongwith all accessories all accessories as required or as shown on drawings (Imported copper shall be used. Verified documentary evidence for source of copper & PVC shall be furnished prior to manufacturing) as earth continuity conductor (ECC/CPC).					
a)	RA-20	1 core 10 mm^2	5,800	Rft.			
b)	RA-21	1 core 16 mm^2	90	Rft.			
c)	RA-22	1 core 25 mm^2	740	Rft.			
2.0		**<u>LIGHT FITTINGS AND FANS</u>**					
2.1		Following LED Luminaries of suitable wattage make Philips, GE, Pierlite or approved equivalent suitable for the project requirements. Contractor to submit lighting design calculation to determine the adequacy of the wattage and should adjust the number of LEDs/wattage as per project lighting requirements. The fitting shall be approved by the Engineer.					
a)	RA-23	Light Fixture Type LED Batten Ceiling/Wall/surface mounted mounted, 18W complete in all respect with allied accessories. The fitting shall be approved by the Engineer.	17	Each			
b)	RA-24	Light Fixture Type LED Batten Wall/surface mounted, 10W above mirror in toilets complete in all respect with allied accessories. The fitting shall be approved by the Engineer.	10	Each			
c)	RA-25	20W LED Water tight light fixture IP 65 complete in all respect with all allied accessories or approved equivalent. The fitting shall be approved by the Engineer.	8	Each			

PUNJAB INTERMEDIATE CITIES IMPROVEMENT INVESTMENT PROGRAM (PICIIP)

MISCELLANEOUS CIVIL WORKS FOR PARKING SHEDS AT MUBARAK PURA CAPITAL ROAD, SIALKOT

ELECTRICAL WORKS (NON-MRS ITEMS)

BILL OF QUANTITIES

B - 2.2 ELECTRICAL WORKS
Bill No. 2 NON-MRS ITEMS

Sr. No.	M.R.S 2nd BI-Annual 2021 (Chap/Item)	Description	Unit	Qty.	Rate (Rs.)		Amount (Rs.)
					In Figures	In Words	
d)	RA-26	Light Fixture Type LED Ceiling/surface mountedsurface mounted down lighter, 18W complete in all respect with allied accessories . The fitting shall be approved by the Engineer.	25	Each			
e)	RA-27	Wall bracket Light Fixture Type LED 18W energy saving lamp with holder and complete in all respect with allied accessories. The fitting shall be approved by the Engineer.	10	Each			
f)	RA-28	56" ceiling fan sweep (Climax, Pak, Millat) make or approved equivalent.	7	Each			
g)	RA-29	Wall bracket fan 20" sweep make (Royal, Pak, Millat or approved equivalent) capacitor type, copper winding complete with all accessories or approved equivalent. The fitting shall be approved by the Engineer.	3	Each			
h)	RA-30	Exhaust fan 12" sweep make (Royal, Pak, Millat or approved equivalent) capacitor type, copper winding complete with Plastic body and all accessories etc.	7	Each			
3.0		**POLES & ACCESSORIES**					
a)	RA-31	10 m high single arm conical octagonal (hot dip) galvanized steel pole with extension arm luminaire arrangement, base plate, 2 Amp. SP MCB, (RC=10KA) circuit breaker, 05 Nos. Terminal block including end caps, base connection plates & end stopper etc. as shown on drawing.	12	Each			
b)	RA-32	Road Lighting Pole Foundation (Bitchmen Coating)	12	Each			

PUNJAB INTERMEDIATE CITIES IMPROVEMENT INVESTMENT PROGRAM (PICIIP)

MISCELLANEOUS CIVIL WORKS FOR PARKING SHEDS AT MUBARAK PURA CAPITAL ROAD, SIALKOT

ELECTRICAL WORKS (NON-MRS ITEMS)

BILL OF QUANTITIES

B - 2.2 ELECTRICAL WORKS
Bill No. 2 NON-MRS ITEMS

Sr. No.	M.R.S 2nd BI-Annual 2021 (Chap/Item)	Description	Unit	Qty.	Rate (Rs.)		Amount (Rs.)
					In Figures	In Words	
c)		Road Lighting LED Luminaries 90 Watt make Philips, GE, or approved equivalent, fully in compliance with the specified requirements suitable for the project requirements, fully IP 66 with corrosion resistant die cast aluminum housing, silicon gas kit, thermally hardened glass complete with LED drivers, surge protection and all accessories/ components required for the proper operation of the system. The luminaries shall be fully flexible for future upgrades and easy replacements for maintenance purposes. Contractor to submit lighting design calculation to determine the adequacy of the wattage and should adjust the number of LEDs/wattage as per project lighting requirements.	12	Each			
d)	RA-33	LED Luminaries Flood lights Tango LED 30W or approved equivalent fully IP 65 with corrosion resistant die cast aluminum housing, silicon gas kit, thermally hardened glass complete with LED drivers, surge protection and all accessories/ components required for the proper operation of the system.	21	Each			
e)	RA-34	PVC Junction box size 08"x06"x04" (for Flood Light connection) with frame claded 16 SWG, having high quality powder coated paint, color RAL 7032. suitable for connections with IP44 protection class, door, locking arrangement etc. and all other accessories as required for quality work.	21	Each			
-		Junction box size 08"x06"x04" (for Flood Light connection)					
-		01 No. 2 Amp. SP MCB, 6 kA					
-		05 Nos. Terminal block alongwith all accessories etc.,					
f)		3 Nos. 1 core 2.5 mm^2 Cu/PVC 450/750 Voltage grade cable (stranded conductor) (Imported copper shall be used. Verified documentary evidence for source of copper & PVC shall be furnished prior to manufacturing) from junction box to the fitting through the hollow of pole.					
-	RA-35	40 ft. cable is required for each pole and the unit is taken as No. Price per No.	12	Each			

PUNJAB INTERMEDIATE CITIES IMPROVEMENT INVESTMENT PROGRAM (PICIIP)

MISCELLANEOUS CIVIL WORKS FOR PARKING SHEDS AT MUBARAK PURA CAPITAL ROAD, SIALKOT

ELECTRICAL WORKS (NON-MRS ITEMS)

BILL OF QUANTITIES

B - 2.2 ELECTRICAL WORKS
Bill No. 2 NON-MRS ITEMS

Sr. No.	M.R.S 2nd BI-Annual 2021 (Chap/Item)	Description	Unit	Qty.	Rate (Rs.)		Amount (Rs.)
					In Figures	In Words	
g)	RA-36	Locally manufactured decorative gate light with 100W LED complete in all respect with allied accessories make Philips, GE, Pierlite or approved equivalent. The fitting shall be approved by the Engineer.	4	Each			
4.0		**<u>uPVC PIPE</u>**					
4.1		PVC pipe conduit with accessories suitable for laying single/multi-core cables.					
a)	RA-37	50 mm dia (Class-D)	1,950	Rft.			
b)	RA-38	100 mm dia (Class-B)	1,600	Rft.			
c)	RA-39	100 mm dia (Class-D)	500	Rft.			

PUNJAB INTERMEDIATE CITIES IMPROVEMENT INVESTMENT PROGRAM (PICIIP)

MISCELLANEOUS CIVIL WORKS FOR PARKING SHEDS AT MUBARAK PURA CAPITAL ROAD, SIALKOT

ELECTRICAL WORKS (NON-MRS ITEMS)

BILL OF QUANTITIES

B - 2.2 ELECTRICAL WORKS
Bill No. 2 NON-MRS ITEMS

Sr. No.	M.R.S 2nd BI-Annual 2021 (Chap/Item)	Description	Unit	Qty.	Rate (Rs.)		Amount (Rs.)
					In Figures	In Words	
5.0		**DISTRIBUTION BOARDS**					
5.1		D.Bs with TP incoming adjustable moulded case circuit breaker and SP miniature outgoing circuit breakers, Panel box SWG 16 powder coated RAL colour 7032, IP class 44/ 54 and with all accessories. alongwith all installation and operational accessories as per specification or as shown on the drawings.					
(a)		**DB- Office Building**					
	RA-40	**MATERIAL**	1	No.			
-		01 No. 50 Amps (Adj.) MCCB TP, RC=25kA, Icu=100%Ics					
-		08 Nos. outgoing 10A, MCB, SP, RC=10 kA, Icu=100%Ics					
-		09 Nos.outgoing 20A, MCB, SP, RC=10 kA, Icu=100%Ics					
-		04 Nos. Spare 10/20A, MCB, SP, RC=10 kA, Icu=100%Ics					
-		03 Nos. Space for 10/20A, MCB					
-		Indication lights, push buttons, digital ammeter with selector switch, digital voltmeter with selector switch, Panel box SWG 16 powder coated RAL colour 7032, IP class 44 and with all accessories.					
b)		D.Bs with DP incoming MCB breaker and SP miniature circuit breakers as shown.					
		DB- Security Guard Rooom					
		MATERIAL					
-	RA-41	01 No. Incoming 32 Amp MCB , DP, RC=10 kA	2	Each			
-		02 Nos. Outgoing 10 Amp MCB, SP, RC=10 kA					
-		01 No. Outgoing 20 Amp MCB, SP, RC=10 kA					
-		02 Nos. spare 10/20 Amp MCB, SP, RC=10 kA					
-		02 Nos. space 10/20 Amp MCB, SP, RC=10 kA					

PUNJAB INTERMEDIATE CITIES IMPROVEMENT INVESTMENT PROGRAM (PICIIP)

MISCELLANEOUS CIVIL WORKS FOR PARKING SHEDS AT MUBARAK PURA CAPITAL ROAD, SIALKOT

ELECTRICAL WORKS (NON-MRS ITEMS)

BILL OF QUANTITIES

B - 2.2 ELECTRICAL WORKS
Bill No. 2 NON-MRS ITEMS

Sr. No.	M.R.S 2nd BI-Annual 2021 (Chap/Item)	Description	Unit	Qty.	Rate (Rs.)		Amount (Rs.)
					In Figures	In Words	
-		Indication lights, digital voltmeter, digital ammeter, Panel box SWG 16 powder coated RAL colour 7032, IP class 44 and with all accessories.					
6.0		**<u>LV SWITCHGEAR / MAIN PANEL BOARD (MPB)</u>**					
6.1		LV Switchgear Panel/Main Panel Board of 14 SWG, IP class 44/54 & RAL 7032 including I/C and O/G following electrical items, foundation/base frame with all installation and operational accessories as per site requirements, as per tender specifications and drawings and as directed by the Engineer.					
(a)		**<u>MPB</u>**					
	RA-42	**INCOMING**	1	No.			
-		01 No. 100 Amps TP (adj.) MCCB, RC= 25 kA, Icu=100%Ics					
-		01 No. VSS (07 position)					
-		01 No. 0-600 Volts AC DIGITAL Voltmeter					
-		03 Nos. 100/5 Amps Current Transformers					

PUNJAB INTERMEDIATE CITIES IMPROVEMENT INVESTMENT PROGRAM (PICIIP)

MISCELLANEOUS CIVIL WORKS FOR PARKING SHEDS AT MUBARAK PURA CAPITAL ROAD, SIALKOT

ELECTRICAL WORKS (NON-MRS ITEMS)

BILL OF QUANTITIES

B - 2.2 ELECTRICAL WORKS
Bill No. 2 NON-MRS ITEMS

Sr. No.	M.R.S 2nd BI-Annual 2021 (Chap/Item)	Description	Unit	Qty.	Rate (Rs.)		Amount (Rs.)
					In Figures	In Words	
-		01 No. ASS (R-Y-B-OFF)					
-		01 No. 0-100 Amps AC DIGITAL Ammeter					
-		06 Nos. RYB and ON OFF TRIP LED indication lights					
-		14 SWG steel sheet Panel RAL 7032, IP= 44/54 and all other accessories,					
		OUTGOING					
-		01 No. 50A TP(adj.) MCCB, RC=18 kA, Icu=100%Ics (Office Building)					
-		02 Nos. 16 Amp MCCB TP, (Adj.) RC=18kA, Icu=100%Ics with 25 Amp. Magnetic Contactor including Push button (ON/OFF) & Indication lights for Area / Shed Lighting.					
-		02 Nos. 32Amp MCB DP, (Adj.) RC=10kA, Icu=100%Ics (Security guard Room)					
-		01 No. Spare 50 Amp MCCB TP, (Adj.) RC=25kA , Icu=100%Ics					
-		01 No. Spare 16 Amp MCCB TP, (Adj.) RC=18kA, Icu=100%Ics with 25 Amp. Magnetic Contactor including Push button (ON/OFF) & Indication lights for Area / Shed Lighting.					
-		01 No. Spare 32Amp MCB DP, (Adj.) RC=10kA, Icu=100%Ics					
-		02 No. MCCB 25Amps TP, space					
-		All other accessories required for completion of the quality works including Cable gland and lugs etc.					
-		Electrolytic copper bus bar with electrical grade PVC mountings 3 for each, nuts, bolts and washers, control MCB etc. (200 Amps. R+Y+B N, 50 Hz, 415 V, AC) including cable glands at top/bottom entry for cable)					
-		Contractor shall submit the genuine certificate from the manufacturer/authorized agent clear by indicating the project name make/model/rating of MCCB, MCB, magnetic contactors, terminal blocks and voltmeters/ ammeter alongwith warranties.					

PUNJAB INTERMEDIATE CITIES IMPROVEMENT INVESTMENT PROGRAM (PICIIP)

MISCELLANEOUS CIVIL WORKS FOR PARKING SHEDS AT MUBARAK PURA CAPITAL ROAD, SIALKOT

ELECTRICAL WORKS (NON-MRS ITEMS)

BILL OF QUANTITIES

B - 2.2 ELECTRICAL WORKS
Bill No. 2 NON-MRS ITEMS

Sr. No.	M.R.S 2nd BI-Annual 2021 (Chap/Item)	Description	Unit	Qty.	Rate (Rs.)		Amount (Rs.)
					In Figures	In Words	
7.0		**EARTHING**					
7.1	RA-43	Earth point comprising of 10 ft. 5/8" dia. (16 mm dia) copper coated M.S. rods driven in ground. The earthing rods shall be completed with fixing clamps etc.	12	No.			
8.0		**TRANSFORMER**					
8.1		11/0.415 kV Pole mounted Transformer complete with all accessories as per WAPDA specifications and practice including all required works for proper completion of civil/material works as per specification.					
a)	RA-44	50 kVA	1	Job			
8.2	RA-45	Provision for the cost of security deposit and obtaining of 11 kV electrical connection with installation, testing and commissioning including all material, labour, tools, accessories, etc. required for proper completion of each item as per specification of WAPDA/DISCO.	1	Lumpsum			
		TOTAL FOR NON-MRS ITEMS					
		TOTAL (MRS+ Non-MRS)					

PUNJAB INTERMEDIATE CITIES IMPROVEMENT INVESTMENT PROGRAM (PICIIP)
PARKING SHEDS MUBARAKPURA, CAPITAL ROAD, SIALKOT
BILL OF QUANTITIES

B-2.3 SURVEILLANCE SYSTEM WORKS

Sr. No.	M.R.S 2nd BI-Annual 2021 (Chap/Item)	Description	Unit	Qty.	Rate (Rs.)		Amount (Rs.)
					In Figures	In Words	
1	RA-46	**Fixed Bullet Camera** Image Sensor : 5 MPX CMOS sensor 1/2.7” Lens Type : motor-zoom, IR Range : 45 meter Enclosure : aluminium outdoor housing	20	No			
2	RA-47	Poles 5m with Foundation	12	No.			
3	RA-48	32CH NVR (Network Video Recorder) with Supported protocols: ONVIF, RTSP, Recording speed up to 960 fps at 3840 x 2160, Supports resolution up to 3840 x 2160, Recorded stream size: 256 Mb/s in total from all cameras, Internal HDDs mount: 8, Monitor outputs: 3 (HDMI (4K UltraHD), HDMI, VGA), Intelligent image analysis.	1	No.			
4	RA-49	Hard Disk 6TB Surveillance SATA 3.5"	1	No.			
5	RA-50	FHD LED Display unit 55 inch including all accessories, wall mounting brackets, software and hardware	1	No.			
6	RA-51	Operator Workstation with VDU	1	No.			
7	RA-52	A4 size Color Printer	1	No.			
8	RA-53	8-PORT PoE Access Switch 8 PoE Ethernet ports which shall support IEEE 802.2af/at standards. PoE network port with IEEE802.3 af/at standards and shall have 2 x 1000Mbps optical fiber port SFPs	5	No			
9	RA-54	Managed distribution switch • 8 ports SFP slot & 1 port 10/100/1000 Gigabit Optical Fiber	1	No.			
10	RA-55	UTP CAT-6 4-Pair Data Cable	150	m			
11	RA-56	HDPE pipe • size 40mm • outer dia 40mm • wall thickness 3.5mm • standard length: 125m/250m/1000m	430	m			

PUNJAB INTERMEDIATE CITIES IMPROVEMENT INVESTMENT PROGRAM (PICIIP)
PARKING SHEDS MUBARAKPURA, CAPITAL ROAD, SIALKOT
BILL OF QUANTITIES

B-2.3 SURVEILLANCE SYSTEM WORKS

Sr. No.	M.R.S 2nd BI-Annual 2021 (Chap/Item)	Description	Unit	Qty.	Rate (Rs.)		Amount (Rs.)
12	RA-57	27 U Data Cabinet for Superintendent office with fan, lock and glass door	1	No			
13	RA-58	12U Data Cabinet with fan, lock and glass door	4	No.			
14	RA-59	Hand Hole 0.9mx0.9mx0.9m	11	No.			
15	RA-60	**24 Core Fiber Optic Cable** , Standard G652-D, • Cable type Single Mode • Cable construction Loose tube • Layer of Aramid Yarn 5mm • Wavelength 1310/1550 nm • Max attenuation 0.36 db/km including Excavation/Backfilling and duct with all accessories	430	m			
16	RA-61	**24-Port ODF** with coupler, pigtails and Patch cords, complete accessories. Housing Material :Steel Allow for **any other item** required for completion of system not covered in BOQ or specifications / drawings in accordance with the same standards and brands shown and approved by consultant. All such items shall be covered in this item but complete description, item rates, quantity required and brands shall be mentioned separately and to be attached with the BOQ. **Note:** **1)** The Bidder shall provide the all BoQ items as per Technical Specificationtem of Bidding Documents brands shown and approved by consultant. **2)** Contractor is advised to confirm the cable running lengths as per site conditions before commencement of work.The Payment of cable shall be paid as per Running meter.	1	No			
		Total					

PUNJAB INTERMIDIATE CITIES IMPROVEMENT INVESTMENT PROGRAM (PICIIP)

MISCELLANEOUS CIVIL WORKS FOR PARKING SHEDS AT MUBARAKPURA CAPITAL ROAD, SIALKOT

BILL OF QUANTITIES

B-2.4 TRANSPORTATION WORKS

Sr. No.	M.R.S 2nd BI-Annual 2021 (Chap/Item)	Description	Unit	Qty.	Rate (Rs.)		Amount (Rs.)
					In Figures	In Words	
1		**MRS ITEMS ROAD WORKS**					
1.1	Ch. 3 Item 5 (i) + Ch.3 Item 17 (a,b,c)	Earthwork in ordinary soil for embankments, including ploughing and mixing with blade grade or disc harrow or other suitable equipment, and compaction by mechanical means at optimum moisture content and dressing to designed section, complete in all respects:- i) 95% to 100% maximum modified AASHO dry density.(Material from **Borrow excavation** including **8km lead** & lift)	185,350	Cft			
1.2	Ch. 3 Item 25 (i)	Compaction of earthwork with power road roller, including ploughing, mixing, moistening earth to optimum moisture content in layers, etc.complete: i) 95% to 100% maximum modified AASHO dry density.	30,900	Cft			
1.3	18/3 (a-ii), 1/1	Providing and laying **subbase course** of crushed stone aggregate of approved quality and grade, including placing, mixing, spreading and compaction of subbase material to required depth, camber, grade to achieve 100% maximum modified AASHO dry density, (Including carriage of all material to site of work from **Sikhanwali Quarry Sargodha**) .	30,900	Cft			

PUNJAB INTERMIDIATE CITIES IMPROVEMENT INVESTMENT PROGRAM (PICIIP)

MISCELLANEOUS CIVIL WORKS FOR PARKING SHEDS AT MUBARAKPURA CAPITAL ROAD, SIALKOT

BILL OF QUANTITIES

B-2.4 TRANSPORTATION WORKS

Sr. No.	M.R.S 2nd BI-Annual 2021 (Chap/Item)	Description	Unit	Qty.	Rate (Rs.)		Amount (Rs.)
					In Figures	In Words	
1.4	Ch. 6 item 6(a)(ii) 2 + 1-1	Providing and laying reinforced cement concrete (including prestressed concrete), using coarse sand and screened graded and washed aggregate, in required shape and design, including forms, moulds, shuttering, lifting, compacting, curing, rendering and finishing exposed surface, complete (but excluding the cost of steel reinforcement, its fabrication and placing in position, etc.):- (a) (ii) Reinforced cement concrete in slabod raft / strip foundation,base slab of coloum and retaining walls, etc and other structural member other than those mentioned in 5(a) (i) above not requiring form work (i.e. horizental **4000psi Concrete - Joint Reinforced Concrete Pavement (J.R.C.P)**	40,680	Cft			
1.5	Ch. 6 / 5(i) + 1-1	Cement concrete plain including placing, compacting, finishing and curing complete (including screening and washing of stone aggregate): **(i) Ratio 1: 4: 8**	20,600	Cft			

PUNJAB INTERMIDIATE CITIES IMPROVEMENT INVESTMENT PROGRAM (PICIIP)

MISCELLANEOUS CIVIL WORKS FOR PARKING SHEDS AT MUBARAKPURA CAPITAL ROAD, SIALKOT

BILL OF QUANTITIES

B-2.4 TRANSPORTATION WORKS

Sr. No.	M.R.S 2nd BI-Annual 2021 (Chap/Item)	Description	Unit	Qty.	Rate (Rs.)		Amount (Rs.)
					In Figures	In Words	
1.6	Ch. 6 / 9(c)	Fabrication of mild steel reinforcement for cement concrete, including cutting, bending, laying in position, making joints and fastenings, including cost of binding wire and labour charges for binding of steel reinforcement (also includes removal of rust from bars): (c) Deformed bars (Grade-60)	70.00	TON			
1.7	Ch. 18 / 16	Providing and laying expansion joint of neoprine strip 4"x¼" (100 mmx 6 mm) and plastic bitumen.	8,680	Rft			
1.8	Ch. 6 Item 49b(i)	Providing and fixing precast Edge kerb stone (4" to 6" thick) of 3500 PSI Compressive Strenght, embeded in PCC 1:2:4 over lean concrete 1:4:8 etc complete in all respect.b) with painting(i) 14" high	420	Rft			
		Sub Total: MRS Items (1)					

PUNJAB INTERMEDIATE CITIES IMPROVEMENT INVESTMENT PROGRAM (PICIIP)

MISCELLANEOUS CIVIL WORKS FOR PARKING SHEDS AT MUBARAK PURA CAPITAL ROAD, SIALKOT

PLUMBING WORKS FOR OFFICE BUILDING
BILL OF QUANTITIES

B-2.5 PLUMBING WORKS

Sr. No.	*MRS 2nd Bi-Annual 2021 Ch / Item*	*Description*	*Unit*	*Quantity*	*Rate (Rs.)*		*Amount (Rs.)*
					In Figures	*In Words*	
I		**MRS ITEMS**					
A		**INTERNAL PLUMBING**					
		PLUMBING FIXTURES					
1	19/27	Providing and fixing chromium plated tee stop cock	No.	17			
2	19/23	Providing and fixing chromium plated pillar-cock, heavy:- 1.5 cm (½")	No.	2			
3	19/29	Providing and fixing chromium plated mixing valve, for wash hand basin, sink or shower.	No.	2			
4	19/1(i)	Providing and fitting glazed earthen ware water closet european type, excluding seat and cover, white.	No.	4			
5	19/11(i)	Providing and fitting glazed earthern ware made low down flushing cistern 13.63 litre (3 gallons) capacity, including bracket set, copper connection, etc. complete in all respects.	No.	4			
6	19/2(i)	Providing and fixing, double seat and cover only, bakelite.	No.	4			

PUNJAB INTERMEDIATE CITIES IMPROVEMENT INVESTMENT PROGRAM (PICIIP)

MISCELLANEOUS CIVIL WORKS FOR PARKING SHEDS AT MUBARAK PURA CAPITAL ROAD, SIALKOT

PLUMBING WORKS FOR OFFICE BUILDING
BILL OF QUANTITIES

B-2.5 PLUMBING WORKS

Sr. No.	*MRS 2nd Bi-Annual 2021 Ch / Item*	*Description*	*Unit*	*Quantity*	*Rate (Rs.)*		*Amount (Rs.)*
7	19/3(i)	Providing and fitting glazed earthen ware water closet, squatter type (orissa pattern), combined with foot rest, white.	No.	3			
8	19/12(i)	Providing and fitting plastic made low down flushing cistern 13.63 litre (3 gallons) capacity, including bracket set, copper connection, etc. complete in all respects.	No.	3			
9	19/6	Providing and fitting glazed earthen ware wash hand basin 56 × 40 cm (22" × 16") including bracket set, waste pipe and waste coupling,etc.					
		(iii) white, without pedestal	No.	8			
10	19/5(ii)	Providing and fixing chromium plated bottle trap with waste pipe, etc. complete:- 4 cm (1½").	No.	8			
11	19/15	Providing and fixing, chromium plated soap dish.	No.	6			
12	19/17	Providing and fixing chromium plated toilet paper holder.	No.	4			
13	19/7(i)	Providing and fixing 1.5 cm (1/2") dia connection, including check nuts, etc; plastic rubber connection.	No.	17			

PUNJAB INTERMEDIATE CITIES IMPROVEMENT INVESTMENT PROGRAM (PICIIP)

MISCELLANEOUS CIVIL WORKS FOR PARKING SHEDS AT MUBARAK PURA CAPITAL ROAD, SIALKOT

PLUMBING WORKS FOR OFFICE BUILDING
BILL OF QUANTITIES

B-2.5 PLUMBING WORKS

Sr. No.	*MRS 2nd Bi-Annual 2021 Ch / Item*	*Description*	*Unit*	*Quantity*	*Rate (Rs.)*		*Amount (Rs.)*
14	23/46	Providing, laying, testing and commissioning of POLYPROPYLENE RANDOM COPOLYMER (PPRC) water supply pipe made of (Dadex /Popular/ Beta / BBJ) with specified pressure rating PN (PRESSURE NOMINAL)and conforming to DIN 8077-8078 code i/c cost of solvent, specials,making jharries complete in all respect as approved and directed by Engineer Incharge.(Internal/External Diameters mentioned). c) PN-25 pipe					
		(ii) (5/8") 25 mm	Rft	141.00			
		(iii) (3/4") 32 mm	Rft	55.00			
		iv) (1") 40 mm	Rft	39.00			
15	23/45	Providing and fixing CP heavy duty brass Ball valve with CP handle of specified diameter made of Faisal/Sonex / Master best quality or equivalent complete in all respect as approved and directed by the Engineer Incharge.					
		ii) (3/4") 32 mm	No.	1.00			
		iii) (1") 40 mm	No.	1.00			
		v) (1-1/2") 50 mm	No.	2.00			
		vi) (2") 63 mm	No.	1.00			

PUNJAB INTERMEDIATE CITIES IMPROVEMENT INVESTMENT PROGRAM (PICIIP)

MISCELLANEOUS CIVIL WORKS FOR PARKING SHEDS AT MUBARAK PURA CAPITAL ROAD, SIALKOT

PLUMBING WORKS FOR OFFICE BUILDING
BILL OF QUANTITIES

B-2.5 PLUMBING WORKS

Sr. No.	*MRS 2nd Bi-Annual 2021 Ch / Item*	*Description*	*Unit*	*Quantity*	*Rate (Rs.)*		*Amount (Rs.)*
		SEWERAGE AND DRAINAGE					
16	19/46	Providing, fixing, testing and commissioning of µ-PVC (Unplasticized polyvinyl Chloride) Nikasi/ waste pipe make of dadex /Popular/Beta/BBJ plain /socket ended conforming to code EN-1401 of specified SDR (Standard Dimension Ratio) including the cost of specials and Solvents complete in all respect as approved and directed by the Engineer Incharge.					
		i) 2" i/d	Rft	39.00			
		ii) 3" i/d	Rft	193.00			
		iii) 4" i/d	Rft	111.00			
17	19/47	Providing, fixing, testing and commissioning of µ-PVC (Unplasticized polyvinyl Chloride) Nikasi/ waste pipe Fittings make of dadex /Popular/Beta/BBJ conforming to code EN-1401 ncluding the cost of Solvents complete in all respect as approved and directed by the Engineer Incharge.					
		(a) P-Trap (i) 4" dia	No.	4			
		(b) Multi-Trap (i) 4" dia	No.	11			
		(c') Vent Cowel (ii) 3" dia	No.	4			

PUNJAB INTERMEDIATE CITIES IMPROVEMENT INVESTMENT PROGRAM (PICIIP)

MISCELLANEOUS CIVIL WORKS FOR PARKING SHEDS AT MUBARAK PURA CAPITAL ROAD, SIALKOT

PLUMBING WORKS FOR OFFICE BUILDING
BILL OF QUANTITIES

B-2.5 PLUMBING WORKS

Sr. No.	*MRS 2nd Bi-Annual 2021 Ch / Item*	*Description*	*Unit*	*Quantity*	*Rate (Rs.)*		*Amount (Rs.)*
B		**EXTERNAL PLUMBING**					
18	3/44	Excavation of trenches in all kinds of soil except cutting rock for water supply pipelines upto 5 ft depth from ground level including trimming, dressing sides, leveling the beds of trenches to correct grade and cutting pits for joints complete in all respects.	1000Cft	0.74			
19	7/30	Supplying & filling sand under floor; or plugging in walls.	100Cft	0.82			
		SEWERAGE AND DRAINAGE					
20	19/35	Providing and fitting, 4" gully trap including cement concrete ,cost of PVC grating (6" x 6") and masonry chamber (12" x 12").	No.	4			
21	3/42	Earthwork excavation in open cutting for sewers and manholes as shown in drawings including shuttering and timbering, dressing to correct section and dimensions according to templates and levels and removing surface water in all types of soil except shingle gravel and rock upto:					
		i) 0 to 7 ft	t	1.39			
22	3/13a	Rehandling of earthwork, lead upto a single throw of kassi, phaorah or shovel.	1000Cft	1.11			

PUNJAB INTERMEDIATE CITIES IMPROVEMENT INVESTMENT PROGRAM (PICIIP)

MISCELLANEOUS CIVIL WORKS FOR PARKING SHEDS AT MUBARAK PURA CAPITAL ROAD, SIALKOT

PLUMBING WORKS FOR OFFICE BUILDING
BILL OF QUANTITIES

B-2.5 PLUMBING WORKS

Sr. No.	*MRS 2nd Bi-Annual 2021 Ch / Item*	*Description*	*Unit*	*Quantity*	*Rate (Rs.)*		*Amount (Rs.)*
23	3/24 (a)	Mixing moistening earth to optimum moisture content in layers for compaction etc., complete.	1000Cft	1.11			
24	3/24 (b) (ii)	Compaction of earthwork by rolling with animal driven roller/hand rammed for ordinary soil.	1000Cft	1.11			
25	7/30	Supplying & filling sand under floor; or plugging in walls.	100Cft	2.03			
26	19/46	Supplying, laying, jointing, testing of non-pressure uPVC pipes (SN-08, SDR 34) conforming to EN:1401, including uPVC pipes fittings and accessories complete in all respects as per drawings and specifications as per approved manufacturer.					
		i) 6" i/d	Rft	123.00			
		Sub total: MRS ITEMS					

PUNJAB INTERMEDIATE CITIES IMPROVEMENT INVESTMENT PROGRAM (PICIIP)

MISCELLANEOUS CIVIL WORKS FOR PARKING SHEDS AT MUBARAK PURA CAPITAL ROAD, SIALKOT

PLUMBING WORKS FOR OFFICE BUILDING
BILL OF QUANTITIES

B-2.5 PLUMBING WORKS

Sr. No.	*MRS 2nd Bi-Annual 2021 Ch / Item*	*Description*	*Unit*	*Quantity*	*Rate (Rs.)*		*Amount (Rs.)*
II		**NON MRS ITEMS**					
A		**INTERNAL PLUMBING** **WATER SUPPLY**					
27	RA-65	Supply and installation of Instant electric water heater of following capacity , including ball valves on inlet and outlet connections complete in all respects.					
		i) 10 L/Min	No.	2			
28	RA-66	Providing and fixing Muslim Shower with double bib cock complete in all respects.	No.	7			
		SEWERAGE AND DRAINAGE					
29	RA-70	Providing and fixing angle drain for 3'' or 4'' dia rainwater pipe with brass top complete in all respects.	No.	2			
30	RA-71	Providing and fixing looking glass of approved make, 5mm thick complete with frame and fixing clamps.	Sft.	82.50			

PUNJAB INTERMEDIATE CITIES IMPROVEMENT INVESTMENT PROGRAM (PICIIP)

MISCELLANEOUS CIVIL WORKS FOR PARKING SHEDS AT MUBARAK PURA CAPITAL ROAD, SIALKOT

PLUMBING WORKS FOR OFFICE BUILDING
BILL OF QUANTITIES

B-2.5 PLUMBING WORKS

Sr. No.	*MRS 2nd Bi-Annual 2021 Ch / Item*	*Description*	*Unit*	*Quantity*	*Rate (Rs.)*		*Amount (Rs.)*
B		**EXTERNAL PLUMBING**					
B		**NON MRS ITEMS**					
		WATER SUPPLY					
31	RA-72	Providing, fixing, jointing and testing Polyethylene Pipes (PE 100) of class PN 10 of approved manufacturer for cold water including fittings and specials complete in all respects.					
		i) 63 mm	Rft	50			
		ii) 50 mm	Rft	120			
		iii) 40 mm	Rft	75			
32	RA-73	Providing and fixing Water Tank of (Tuff/Dura) or equivalent Fiber Double ply having 500 gallons capacity (Vertical), complete in all respect.	No.	1			
33	RA-74	Supplying, installation, Testing & commisioning of Horizontal Cenrtifugal Pump 25 gpm capacity and head 30 ft, including motor complete in all respect.	No.	1			
		SEWERAGE AND DRAINAGE					
34	RA-76	Construction of square masonary manhole 2.5 x 2.5 ft, including cover and frame.					
		i) upto 5 ft depth	No.	4			

PUNJAB INTERMEDIATE CITIES IMPROVEMENT INVESTMENT PROGRAM (PICIIP)

MISCELLANEOUS CIVIL WORKS FOR PARKING SHEDS AT MUBARAK PURA CAPITAL ROAD, SIALKOT

PLUMBING WORKS FOR OFFICE BUILDING
BILL OF QUANTITIES

B-2.5 PLUMBING WORKS

Sr. No.	*MRS 2nd Bi-Annual 2021 Ch / Item*	*Description*	*Unit*	*Quantity*	*Rate (Rs.)*		*Amount (Rs.)*
35	RA-77	Providing and fixing malleable cast iron step (10" Approx. Weight 7.5kg) in manhole chambers, including carriage and setting the same in work, to correct lines and levels as per drawing and specifications.	No.	14			
36	RA-78	Supplying and fixing 2" dia G.I air vent on roof of Septic Tank.	No.	3			
37	Job	WASA charges for external water and sewerage connection	LS	1			
		Sub total: NON MRS ITEMS					
		TOTAL (MRS + Non-MRS)					

PUNJAB INTERMEDIATE CITIES IMPROVEMENT INVESTMENT PROGRAM (PICIIP)

MISCELLANEOUS CIVIL WORKS FOR COVERED PARKING SHEDS AT MUBARAK PURA CAPITAL ROAD, SIALKOT

WATERSUPPLY NETWORK
BILL OF QUANTITIES

B-2.5 PLUMBING WORKS

BILL NO. 02

Sr. No.	MRS 2nd Bi-Annual 2021 Chap#/Item#	Description	Unit	Quantity	Rate (Rs)		Amount (Rs)
					In Figures	In Words	
1	4/45	Dismantling and removing road metalling. (Provisional Quantity)	100Cft	0.27			
2	4/46	Dismantling and removing road pavement, etc., including screening and stacking of byproducts upto one chain lead 30 metre). **(Base, Sub Base, soling and tuff Paver etc.)** (Provisional Quantity)	100Cft	1.29			
3	4/19	c) Dismantling cement concrete 1:2:4 plain. (Provisional Quantity)	100Cft	0.11			
4	3/44	Excavation of trenches in all kinds of soil, except cutting rock, for watersupply pipelines upto 5 ft. (1.5 m) depth from ground level, including trimming, dressing sides, levelling the beds of trenches to correct grade and cutting pits for joints, etc. complete in all respects.	1000Cft	1.59			
5	3/13	Rehandling of earthwork: a) Lead upto a single throw of Kassi, phaorah or shovel.	1000Cft	1.59			

PUNJAB INTERMEDIATE CITIES IMPROVEMENT INVESTMENT PROGRAM (PICIIP)

MISCELLANEOUS CIVIL WORKS FOR COVERED PARKING SHEDS AT MUBARAK PURA CAPITAL ROAD, SIALKOT

WATERSUPPLY NETWORK
BILL OF QUANTITIES

B-2.5 PLUMBING WORKS

BILL NO. 02

Sr. No	MRS 2nd Bi-Annual 2021	Description	Unit	Quantity	Rate (Rs)		Amount (Rs)
6	3/24	Compaction of earthwork (soft, ordinary or hard soil) :- (Backfilling) a) Mixing, moistening earth to optimum moisture content in layers for compaction, etc. complete.	1000Cft	1.59			
		c) Ramming earthwork (all types of soil). (Backfilling and sand in bedding)	1000Cft	1.82			
7	7/30	Supplying and filling sand under floor; or plugging in wells (in bedding) (Around pipes along road cuts Provisional Quantity)	100Cft	2.33			
Total Amount (MRS Items)							

PUNJAB INTERMEDIATE CITIES IMPROVEMENT INVESTMENT PROGRAM (PICIIP)

MISCELLANEOUS CIVIL WORKS FOR COVERED PARKING SHEDS AT MUBARAK PURA CAPITAL ROAD, SIALKOT

WATERSUPPLY NETWORK
BILL OF QUANTITIES

B-2.5 PLUMBING WORKS

BILL NO. 02

NON- MRS ITEMS

Sr. No.	Ref.	Description	Unit	Quantity	Rate (Rs)		Amount (Rs)
					In Figures	In Words	
1	RA-79	Providing, transportation, laying, cutting, butt fusion jointing, testing, commissioning & disinfecting the High Density Polyethylene Pipe (HDPE) PE-100, (PN-10) SDR 17 including fittings and specials conforming to ISO 4427 or DN8074/8075 or equivalent to the satisfication of Engineer. The pipe shall be from reputable manufacturer approved by the Engineer.) 63 mm o/d	Rft.	264			
Total Amount (NON MRS Items)							

PUNJAB INTERMEDIATE CITIES IMPROVEMENT INVESTMENT PROGRAM (PICIIP)

MISCELLANEOUS CIVIL WORKS FOR PARKING SHEDS AT ALLAMA IQBAL TOWN, SIALKOT

GUARD ROOM
BILL OF QUANTITIES

B - 3.1 ARCHITECTUAL AND STRUCTURAL WORKS

Bill No. 1 GUARD ROOM

Sr. No	M.R.S 2nd BI-Annual 2021 (Chap/Item)	Description	Unit	Quantity	Unit Rate (Rs)		Amount (Rs)
					In Figures	In Words	
1	3/21(b)	Excavation in foundation of building, bridges and other structures, including dagbelling, dressing, refilling around structure with excavated earth, watering and rammiing lead upto one chain (30 m) and lift upto 5 ft. (1.5 m) b) upto 5 ft. (1.5 m)in ordinary soil	Cft	656.91			
2	3/41	Select Fill for specifications see the geotechnical rcommendations *** (Supplying clean and screened river or pit sand within 5chains (150 m).**	Cft	656.91			
3	26/42	TERMITE CONTROL TREATMENT Termite control treatment around/under foundations and floors complete in all respects as shown on the drawings/specifications and/or as directed by the Engineer. (Spraying anti - termi te liquid mixed with water in the ratio of 1:40)	SFT	508.20			

PUNJAB INTERMEDIATE CITIES IMPROVEMENT INVESTMENT PROGRAM (PICIIP)

MISCELLANEOUS CIVIL WORKS FOR PARKING SHEDS AT ALLAMA IQBAL TOWN, SIALKOT

GUARD ROOM
BILL OF QUANTITIES

B - 3.1 ARCHITECTUAL AND STRUCTURAL WORKS

Bill No. 1 GUARD ROOM

Sr. No	M.R.S 2nd BI-Annual 2021 (Chap/Item)	Description	Unit	Quantity	Unit Rate (Rs)		Amount (Rs)
4	6/5(h)	Cement concrete plain including placing, compacting, finishing and curing complete (including screening and washing of stone aggregate): (i) 1500 psi Ratio (1:3:6)	Cft	41.10			
5	6/6(a)(ii)(3)	Providing and laying reinforced cement concrete (including prestressed concrete), using coarse sand and screened graded and washed aggregate, in required shape and design, including forms, moulds, shuttering, lifting, compacting, curing, rendering and finishing exposed surface, complete (but excluding the cost of steel reinforcement, its fabrication and placing in position, etc.):- (a)(ii) Reinforced cement concrete in slab of rafts / strip foundation, base slab of column and retaining walls; etc and other structural members other than those mentioned in 5(a) (i) above not requiring form work (i.e. horizental shuttering) complete in all respects:- 2500psi (Ratio 1:2:4)	Per Cft	115.17			

PUNJAB INTERMEDIATE CITIES IMPROVEMENT INVESTMENT PROGRAM (PICIIP)

MISCELLANEOUS CIVIL WORKS FOR PARKING SHEDS AT ALLAMA IQBAL TOWN, SIALKOT

GUARD ROOM
BILL OF QUANTITIES

B - 3.1 ARCHITECTUAL AND STRUCTURAL WORKS

Bill No. 1 GUARD ROOM

Sr. No	M.R.S 2nd BI-Annual 2021 (Chap/Item)	Description	Unit	Quantity	Unit Rate (Rs)		Amount (Rs)
6	6/6(a)(i)(3)	(a) (i) Reinforced cement concrete in roof slab, beams, columns lintels, girders and other structural members laid in situ or precast laid in position, or prestressed members cast in situ, complete in all respects:- 2500psi (Ratio 1:2:4)	Per Cft	87.56			
7	6/9('c)	Fabrication of mild steel reinforcement for cement concrete, including cutting, bending, laying in position, making joints and fastenings, including cost of binding wire and labour charges for binding of steel reinforcement (also includes removal of rust from bars):-					
		('c) Deformed bars (Grade-60)	Tons	0.43			
8	7/4(i)	Pacca brick work in foundation and plinth in:- (Plinth protection) i) Cement, sand mortar:- Ratio 1:3	Cft	175.26			

PUNJAB INTERMEDIATE CITIES IMPROVEMENT INVESTMENT PROGRAM (PICIIP)

MISCELLANEOUS CIVIL WORKS FOR PARKING SHEDS AT ALLAMA IQBAL TOWN, SIALKOT

GUARD ROOM
BILL OF QUANTITIES

B - 3.1 ARCHITECTUAL AND STRUCTURAL WORKS

Bill No. 1 GUARD ROOM

Sr. No	M.R.S 2nd BI-Annual 2021 (Chap/Item)	Description	Unit	Quantity	Unit Rate (Rs)		Amount (Rs)
		Damp Proof Course					
9	6/33(b)(i)	Providing and laying damp proof course (1.5" Thick) of cement concrete 1:2: 4(using cement, sand and shingle), including bitumen coating (2 Coats of Bitumen)	Sft	27.56			
10	6/35(b)(ii)b	Providing and laying vertical damp proof course with cement sand plaster (3/4" thick with 1:3 ratio) and bitumen coating (2 Coats of Bitumen)	Sft	36.75			
11	3/15 (i)	Filling, watering and ramming earth under floors:- ***with surplus earth from foundation, etc.***	1000 Cft.	0.10			
12	3/17 (a, b,c,d)	Transportation of ***Earth all types*** when the total distance including the lead covered in the item of work, is more than 1000 ft.(300 m)	1000 Cft.	0.20			
13	3/24 (a, b-i)	Compaction of **Earthwork** (soft, ordinary or hard soil) :-	1000 Cft.	0.20			
14	7/30	Supplying and filling ***sand under floor*** ; or plugging in wells.	100 Cft.	0.30			

PUNJAB INTERMEDIATE CITIES IMPROVEMENT INVESTMENT PROGRAM (PICIIP)

MISCELLANEOUS CIVIL WORKS FOR PARKING SHEDS AT ALLAMA IQBAL TOWN, SIALKOT

GUARD ROOM
BILL OF QUANTITIES

B - 3.1 ARCHITECTUAL AND STRUCTURAL WORKS
Bill No. 1 GUARD ROOM

Sr. No	M.R.S 2nd BI-Annual 2021 (Chap/Item)	Description	Unit	Quantity	Unit Rate (Rs)		Amount (Rs)
		Concrete.					
15	6/5 (f)	Cement **Concrete plain** including placing, compacting, finishing and curing complete (including screening and washing of stone aggregate)					
	6/5 (i)	*Ratio 1:4:8 (under floor.)*	100 Cft.	0.50			
	6/5 (f)	*Ratio 1:2:4 (under floor.)*	100 Cft.	0.10			
		Brickwork.					
16	7/5.(i)	Pacca brick work in ground floor:-:- Cement, sand mortar:-**Ratio 1:5**	100 Cft.	2.00			
17	9/5-9/12	Providing and laying 9" x 4½" x 1½" (225mm x 113mm x 40 mm) **brick tiles** grouted with cement sand 1:3, laid over 4"(100 mm) (average) thick earth with 1" (25 mm) mud plaster without Bhoosaw, grouted with cement sand 1:3 on top of **RCC roof slab**, ***excluding c****ost of 34 lbs. per %Sft. or 1.72 Kg/Sq.m bitumen coating sand blinded***.**					
		First Floor	100 Sft.	1.00			

PUNJAB INTERMEDIATE CITIES IMPROVEMENT INVESTMENT PROGRAM (PICIIP)

MISCELLANEOUS CIVIL WORKS FOR PARKING SHEDS AT ALLAMA IQBAL TOWN, SIALKOT

GUARD ROOM
BILL OF QUANTITIES

B - 3.1 ARCHITECTUAL AND STRUCTURAL WORKS
Bill No. 1 GUARD ROOM

Sr. No	M.R.S 2nd BI-Annual 2021 (Chap/Item)	Description	Unit	Quantity	Unit Rate (Rs)		Amount (Rs)
18	26/37 (ii)	Supplying and laying **polythene sheet** over D.P.C. under floors and on roofs, etc.					
		500 gauge	Sft.	142.00			
19	9/45 (c)	Providing and Laying Insulation material of ***Extruded Polystyrene XPS*** in Rigid Insulation / Foam Board on roof or walls, Density 32-38Kg/M3, compressive strength 250-400 kpa, R-value 5 per inch thickness and water absorption (1% by volume, cell structure colored cell) i/c cutting and placing in position complete in all respect.					
		2" thick	100 Sft.	1.00			
20	9/15	Construction of Khuras on roof 2' x 2' x 6"	Each.	1.00			

PUNJAB INTERMEDIATE CITIES IMPROVEMENT INVESTMENT PROGRAM (PICIIP)

MISCELLANEOUS CIVIL WORKS FOR PARKING SHEDS AT ALLAMA IQBAL TOWN, SIALKOT

GUARD ROOM
BILL OF QUANTITIES

B - 3.1 ARCHITECTUAL AND STRUCTURAL WORKS

Bill No. 1 GUARD ROOM

Sr. No	M.R.S 2nd BI-Annual 2021 (Chap/Item)	Description	Unit	Quantity	Unit Rate (Rs)		Amount (Rs)
		Flooring.					
21	10/15 (e)	Providing and laying **2" thick topping** of cement concrete 1:2:4, including surface finishing and dividing in panels.	100 Sft.	1.00			
22	10/42 (a)	Providing and fixing size 1½" x 3/8" (40 x 10 mm) **marble strip** of any shade for dividing the mosaic flooring into panels.	Rft.	53.00			
		Surface Rendering.					
23	11/10 (b)	Cement plaster ratio 1:3 under **soffit of R.C.C. roof slabs** only, upto 20' height. 3/8" (10 mm) thick.	100 Sft.	1.00			
24	11/9 (b)	Cement plaster 1:4 on **internal walls** upto 20' (6.00 m) height and ½" (13 mm) thick.	100 Sft.	2.00			

PUNJAB INTERMEDIATE CITIES IMPROVEMENT INVESTMENT PROGRAM (PICIIP)

MISCELLANEOUS CIVIL WORKS FOR PARKING SHEDS AT ALLAMA IQBAL TOWN, SIALKOT

GUARD ROOM
BILL OF QUANTITIES

B - 3.1 ARCHITECTUAL AND STRUCTURAL WORKS
Bill No. 1 GUARD ROOM

Sr. No	M.R.S 2nd BI-Annual 2021 (Chap/Item)	Description	Unit	Quantity	Unit Rate (Rs)		Amount (Rs)
25	11/9 (c)	Cement plaster 1:4 on **internal walls** upto 20' (6.00 m) height and ¾" (20 mm) thick.	100 Sft.	1.00			
26	11/9 (c)	Cement plaster 1:4 on ***external walls*** upto 20' (6.00 m) height and ¾" (20 mm) thick.	100 Sft.	2.00			
27	11/16 (a)	Cement ***pointing struck joints*** , on walls, upto 20' (6.00 m) hiehgt:- ***ratio 1:2***	100 Sft.	4.00			
		Wood Work.					
		Painting & Varnishing.					
28	13/31	Preparing surface and painting with three (03) coats **Emulsion paint** complete in all respect.	100 Sft.	4.00			
29	13/32A	Providing and applying **weather shield paint** of approved quality on external surface of building including preparation of surface, application of primer complete in all respect: ***(02-Coats)***	100 Sft.	2.00			

PUNJAB INTERMEDIATE CITIES IMPROVEMENT INVESTMENT PROGRAM (PICIIP)

MISCELLANEOUS CIVIL WORKS FOR PARKING SHEDS AT ALLAMA IQBAL TOWN, SIALKOT

GUARD ROOM
BILL OF QUANTITIES

B - 3.1 ARCHITECTUAL AND STRUCTURAL WORKS

Bill No. 1 GUARD ROOM

Sr. No	M.R.S 2nd BI-Annual 2021 (Chap/Item)	Description	Unit	Quantity	Unit Rate (Rs)		Amount (Rs)
30	25/52+ 25/53	**Iron Work.** Providing and fixing all types of glazed **aluminium window**s of anodized champagne colour partly fixed and party sliding using deluxe section of approved manufacturer having Frame of size100 mm x 30 mm using frame at bottom, at topand side leaf leaf frame sections of 60mm x 23mm at top & bottom and size 45mm x 25mm at centerand size 45mm x 25mm at sides, Jali leaf frame size 43mm x 13mm i/c fine quality aluminium jali, 5mm thick imported tinted glass with rubber gasket using approved standard latches, wheel, stopper, brush channel angle joint and hardware etc. complete in all respect. (2 mm thick)	Sft.	34.00			
		TOTAL MRS ITEMS					

PUNJAB INTERMEDIATE CITIES IMPROVEMENT INVESTMENT PROGRAM (PICIIP)

MISCELLANEOUS CIVIL WORKS FOR PARKING SHEDS AT ALLAMA IQBAL TOWN, SIALKOT

GUARD ROOM
BILL OF QUANTITIES

B - 3.1 ARCHITECTUAL AND STRUCTURAL WORKS

Bill No. 1 GUARD ROOM

Sr. No	M.R.S 2nd BI-Annual 2021 (Chap/Item)	Description	Unit	Quantity	Unit Rate (Rs)		Amount (Rs)
II		**NON MRS ITEMS**					
31	RA-03	**Roofing.** Provide and apply 2-coats of ***cold applied rubberized bitumen*** of approved manufacture's @ 1kg/m²/coat over 0.75kg/m² primer coat (mixed with 6% water) respectively, over well prepared surfaces complete in all respects and /or as directed by the Engineer in charge.	Sft.	71.00			
32	RA-06	**Flooring.** Providing and laying ***12"x12"x¾" thick China Verona*** Marble of approved quality, colour, shade and texture, on ***floor*** laid over ¾" thick bedding of cement sand mortar 1:2, including grinding and chemical polishing, jointed and grouted with white cement mixed with imported matching colour pigment, complete in all respect as shown on the drawings and/or as directed by the Engineer.	Sft.	69.00			

PUNJAB INTERMEDIATE CITIES IMPROVEMENT INVESTMENT PROGRAM (PICIIP)

MISCELLANEOUS CIVIL WORKS FOR PARKING SHEDS AT ALLAMA IQBAL TOWN, SIALKOT

GUARD ROOM
BILL OF QUANTITIES

B - 3.1 ARCHITECTUAL AND STRUCTURAL WORKS

Bill No. 1 GUARD ROOM

Sr. No	M.R.S 2nd BI-Annual 2021 (Chap/Item)	Description	Unit	Quantity	Unit Rate (Rs)		Amount (Rs)
33	RA-07	Providing and fixing of ***12"x4"x½" Skirting China Verona Marble*** , set with neat cement paste over ¾" thick 1:2 cement sand base plaster, including grinding and chemical polishing, jointed and grouted with white cement mixed with pigment. complete in all respects as per the approval of the Engineer.	Sft.	8.00			
34	RA-08	Providing and laying **pre-polished China Verona Slab** ¾" thick (single piece) of approved quality, colour, shade and texture for ***stair treads*** set over ¾" thick 1:2 cement sand mortar i/c rendering-off 2 No. non-skidding grooves (¾" wide and ¼" deep) in each steps, rounding-off front edge complete in all respect as shown in the drawings and/or as directed by the Engineer.	Sft.	9.00			

PUNJAB INTERMEDIATE CITIES IMPROVEMENT INVESTMENT PROGRAM (PICIIP)

MISCELLANEOUS CIVIL WORKS FOR PARKING SHEDS AT ALLAMA IQBAL TOWN, SIALKOT

GUARD ROOM
BILL OF QUANTITIES

B - 3.1 ARCHITECTUAL AND STRUCTURAL WORKS

Bill No. 1 GUARD ROOM

Sr. No	M.R.S 2nd BI-Annual 2021 (Chap/Item)	Description	Unit	Quantity	Unit Rate (Rs)		Amount (Rs)
35	RA-09	Providing and laying ½" thick pre polished ***China Verona Slab*** of approved quality, colour, shade and texture for ***stair risers*** laid over ¾" thick 1:2 cement sand mortar, complete in all respect as shown on the drawings and/or as directed by the Engineer.	Sft.	5.00			
		Iron Work. *(Before execution of below mentioned itemized works the Contractor shall provide the shop drawings for the prior approval of the Engineer)*					
36	RA-11	Providing and fixing ***Diamond Mesh (24 SWG)*** , with concrete nails at location of concrete interfacing masonry complete in all respect as shown on the drawings, and/ or as directed by the Engineer.	Sft.	32.00			
37	RA-14	Providing, fabricating and fixing ***M.S Steel grill*** for windows neat to lines shown on the drawings, specifications and/ or as directed by the Engineer.	Kg.	92.00			

PUNJAB INTERMEDIATE CITIES IMPROVEMENT INVESTMENT PROGRAM (PICIIP)

MISCELLANEOUS CIVIL WORKS FOR PARKING SHEDS AT ALLAMA IQBAL TOWN, SIALKOT

GUARD ROOM
BILL OF QUANTITIES

B - 3.1 ARCHITECTUAL AND STRUCTURAL WORKS

Bill No. 1 GUARD ROOM

Sr. No	M.R.S 2nd BI-Annual 2021 (Chap/Item)	Description	Unit	Quantity	Unit Rate (Rs)		Amount (Rs)
38	RA-15	Providing and fixing of 16 SWG M.S. Sheet panel door comprising of M.S frame & shutter (factory primmed) welded with 1½"x1½"x¼" M.S angle frame, i/c locking arrangement, eryls, hinges, enamel painting etc. complete in all respects as per drawings and specifications and/or as directed by the Engineer.	Sft.	18.00			
		TOTAL NON-MRS ITEMS					
		TOTAL (MRS+ Non-MRS) FOR 01-NOS SECURITY GUARD ROOM					

PUNJAB INTERMEDIATE CITIES IMPROVEMENT INVESTMENT PROGRAM (PICIIP)

MISCELLANEOUS CIVIL WORKS FOR PARKING SHEDS AT ALLAMA IQBAL TOWN, SIALKOT

GUARD ROOM
BILL OF QUANTITIES

B - 3.1 ARCHITECTUAL AND STRUCTURAL WORKS

Bill No. 2 Entry Gate

Item No.	*Ref. MRS, 2nd Bi-Annual 2021 Chap. / Item No*	*Description*	*Unit*	*Qty*	*Rate (Rs.)*		*Amount (Rs.)*
					In Figures	**In Words**	
I		**MRS ITEMS**					
		Surface Rendering.					
1	11/9 (c)	Cement plaster 1:4 on ***external walls*** upto 20' (6.00 m) height and ¾" (20 mm) thick.	100 Sft.	2.00			
		Painting & Varnishing.					
2	13/5 (d)	Preparing surface and painting guard bars, ***gates of iron bars, gratings, railing*** (including standards,braces, etc.) and in similar open work:- (***03-Coats)***	100 Sft.	2.00			
3	13/32A	Providing and applying **weather shield paint** of approved quality on external surface of building including preparation of surface, application of primer complete in all respect: ***(02-Coats)***	100 Sft.	2.00			

PUNJAB INTERMEDIATE CITIES IMPROVEMENT INVESTMENT PROGRAM (PICIIP)

MISCELLANEOUS CIVIL WORKS FOR PARKING SHEDS AT ALLAMA IQBAL TOWN, SIALKOT

GUARD ROOM
BILL OF QUANTITIES

B - 3.1 ARCHITECTUAL AND STRUCTURAL WORKS

Bill No. 2 Entry Gate

Item No.	*Ref. MRS, 2nd Bi-Annual 2021*	*Description*	*Unit*	*Qty*	*Rate (Rs.)*		*Amount (Rs.)*
4	25/9, 25/11	**Iron Work.** Small ***iron work***, such as gusset plates, knees, bends,stirrups, straps, rings, etc. including cutting, drilling,riveting, handling, assembling and fixing; including erection in position. **TOTAL MRS ITEMS**	100 Kg.	6.00			
		TOTAL FOR 02-NOS ENT GATES					

PUNJAB INTERMEDIATE CITIES IMPROVEMENT INVESTMENT PROGRAM (PICIIP)

MISCELLANEOUS CIVIL WORKS FOR PARKING SHEDS AT ALLAMA IQBAL TOWN, SIALKOT

PRE-ENGINEERED PARKING SHED BUTTERFLY STYLE

BILL OF QUANTITIES

B - 3.1 ARCHITECTUAL AND STRUCTURAL WORKS

Bill No. 3 Cost of prefabricated Steel Structre

Sr. No	M.R.S 2nd BI-Annual 2021 (Chap/Item)	Description	Unit	Quantity	Rate (Rs.)		Amount (Rs)
					In Figures	In Words	
1	RA-107	Supply, installation and transportation of pre-engineered steel building including steel coloumn (column web size 525 x 5 & column flange size 200 x 10), Rafter (Rafter web size 525 x 300 x 4 & Rafter flange size 175 x 8), Roof Purlins (Purlin section size 60 x 200 x 1.5), 0.5 thick pre-painted sheet at roof area and nut bolt etc complete in all respect. (32'-0" x 120'-0" x 15'-0" clear height) All dimesion are in mm unless otherwise specified.	Sft	3,840.00			

PUNJAB INTERMEDIATE CITIES IMPROVEMENT INVESTMENT PROGRAM (PICIIP)

MISCELLANEOUS CIVIL WORKS FOR PARKING SHEDS AT ALLAMA IQBAL TOWN, SIALKOT

PRE-ENGINEERED PARKING SHED BUTTERFLY STYLE

BILL OF QUANTITIES

B - 3.1 ARCHITECTUAL AND STRUCTURAL WORKS

Bill No. 3 Cost of prefabricated Steel Structre

Sr. No	M.R.S 2nd BI-Annual 2021	Description	Unit	Quantity	Rate (Rs.)		Amount (Rs)
2	RA-108	Supply, installation and transportation of pre-engineered steel building including steel coloumn (column web size 350 x 4 & column flange size 150 x 6), Rafter (Rafter web size 350 x 200 x 4 & Rafter flange size 150 x 6), Roof Purlins (Purlin section size 60 x 200 x 1.5), 0.5 thick pre-painted sheet at roof area and nut bolt etc complete in all respect. (16'-0" x 64'-0" x 10'-0" clear height) All dimesion are in mm unless otherwise specified.	Sft	1,024.00			
		TOTAL NON-MRS ITEMS					

PUNJAB INTERMEDIATE CITIES IMPROVEMENT INVESTMENT PROGRAM (PICIIP)

MISCELLANEOUS CIVIL WORKS FOR PARKING SHEDS AT ALLAMA IQBAL TOWN, SIALKOT

BILL OF QUANTITIES

B - 3.1 ARCHITECTUAL AND STRUCTURAL WORKS

Bill No. 4 PARKING SHEDS PADESTAL

Sr. No	M.R.S 2nd BI-Annual 2021 (Chap/Item)	Description	Unit	Quantity	Rate (Rs)		Amount (Rs)
					In Figures	In Words	
1		Excavation in foundation of building, bridges and other structures, including dagbelling, dressing, refilling around structure with excavated earth, watering and rammiing lead upto one chain (30 m) and lift upto 5 ft. (1.5 m)					
	3/21(b)	b) upto 5 ft. (1.5 m)in ordinary soil	Cft	8,037.22			
2							
	3/41	Select Fill for specifications see the geotechnical rcommendations *** (Supplying clean and screened river or pit sand within 5chains (150 m).**	Cft	3869.77			
3	6/5(h)	Cement concrete plain including placing, compacting, finishing and curing complete (including screening and washing of stone aggregate):					
		(i) 1500 psi Ratio (1:3:6)	Cft	540.72			

PUNJAB INTERMEDIATE CITIES IMPROVEMENT INVESTMENT PROGRAM (PICIIP)

MISCELLANEOUS CIVIL WORKS FOR PARKING SHEDS AT ALLAMA IQBAL TOWN, SIALKOT

BILL OF QUANTITIES

B - 3.1 ARCHITECTUAL AND STRUCTURAL WORKS

Bill No. 4 PARKING SHEDS PADESTAL

Sr. No	M.R.S 2nd BI-Annual 2021 (Chapter/Item)	Description	Unit	Quantity	Rate (Rs)		Amount (Rs)
4		Providing and laying reinforced cement concrete (including prestressed concrete), using coarse sand and screened graded and washed aggregate, in required shape and design, including forms, moulds, shuttering, lifting, compacting, curing, rendering and finishing exposed surface, complete (but excluding the cost of steel reinforcement, its fabrication and placing in position, etc.):-					
	6/6(a)(ii)(3)	(a)(ii) Reinforced cement concrete in slab of rafts / strip foundation, base slab of column and retaining walls; etc and other structural members other than those mentioned in 5(a) (i) above not requiring form work (i.e. horizental shuttering) complete in all respects:- 2500psi (Ratio 1:2:4)	Per Cft	2,905.50			
	6/6(a)(i)(3)	(a) (i) Reinforced cement concrete in roof slab, beams, columns lintels, girders and other structural members laid in situ or precast laid in position, or prestressed members cast in situ, complete in all respects:- 2500psi (Ratio 1:2:4)	Per Cft	255.94			

PUNJAB INTERMEDIATE CITIES IMPROVEMENT INVESTMENT PROGRAM (PICIIP)

MISCELLANEOUS CIVIL WORKS FOR PARKING SHEDS AT ALLAMA IQBAL TOWN, SIALKOT

BILL OF QUANTITIES

B - 3.1 ARCHITECTUAL AND STRUCTURAL WORKS

Bill No. 4 PARKING SHEDS PADESTAL

Sr. No	M.R.S 2nd BI-Annual 2021 (Chapter/Item)	Description	Unit	Quantity	Rate (Rs)		Amount (Rs)
5		Fabrication of mild steel reinforcement for cement concrete, including cutting, bending, laying in position, making joints and fastenings, including cost of binding wire and labour charges for binding of steel reinforcement (also includes removal of rust from bars):-					
	6/9('c)	('c) Deformed bars (Grade-60)	Tons	10.02			
Total Amount							

PUNJAB INTERMEDIATE CITIES IMPROVEMENT INVESTMENT PROGRAM (PICIIP)
MISCELLANEOUS CIVIL WORKS FOR PARKING SHEDS AT ALLAMA IQBAL TOWN, SIALKOT

DRAIN
BILL OF QUANTITIES

B - 3.1 ARCHITECTUAL AND STRUCTURAL WORKS

Bill No. 5 DRAIN

Sr. No	M.R.S 2nd BI-Annual 2021 (Chap/Item)	Description	Unit	Quantity	Rate (Rs)		Amount (Rs)
					In Figures	In Words	
1	3/21(b)	Excavation in foundation of building, bridges and other structures, including dagbelling, dressing, refilling around structure with excavated earth, watering and rammiing lead upto one chain (30 m) and lift upto 5 ft. (1.5 m) b) upto 5 ft. (1.5 m)in ordinary soil	Cft	9,290.53			
2	7/30	Select Fill for specifications see the geotechnical rcommendations *** (Supplying and filling sand under floor or plugging in wells).**	Cft	6,193.69			
3	6/5(h)	Cement concrete plain including placing, compacting, finishing and curing complete (including screening and washing of stone aggregate): (i) 1500 psi Ratio (1:3:6)	Cft	397.03			

PUNJAB INTERMEDIATE CITIES IMPROVEMENT INVESTMENT PROGRAM (PICIIP)
MISCELLANEOUS CIVIL WORKS FOR PARKING SHEDS AT ALLAMA IQBAL TOWN, SIALKOT

DRAIN
BILL OF QUANTITIES

B - 3.1 ARCHITECTUAL AND STRUCTURAL WORKS

Bill No. 5 DRAIN

Sr. No	M.R.S 2nd BI-Annual 2021 (Chap/Item)	Description	Unit	Quantity	Rate (Rs)		Amount (Rs)
4	6/6(a)(ii)(2)	Providing and laying reinforced cement concrete (including prestressed concrete), using coarse sand and screened graded and washed aggregate, in required shape and design, including forms, moulds, shuttering, lifting, compacting, curing, rendering and finishing exposed surface, complete (but excluding the cost of steel reinforcement, its fabrication and placing in position, etc.):- (a)(ii) Reinforced cement concrete in slab of rafts / strip foundation, base slab of column and retaining walls; etc and other structural members other than those mentioned in 5(a) (i) above not requiring form work (i.e. horizental shuttering) complete in all respects:-	Per Cft	847.00			

PUNJAB INTERMEDIATE CITIES IMPROVEMENT INVESTMENT PROGRAM (PICIIP)
MISCELLANEOUS CIVIL WORKS FOR PARKING SHEDS AT ALLAMA IQBAL TOWN, SIALKOT

DRAIN
BILL OF QUANTITIES

B - 3.1 ARCHITECTUAL AND STRUCTURAL WORKS

Bill No. 5 DRAIN

Sr. No	M.R.S 2nd Bl-Annual 2021 (Chap/Item)	Description	Unit	Quantity	Rate (Rs)		Amount (Rs)
5	6/6(a)(i)(2)	(a) (i) Reinforced cement concrete in roof slab, beams, columns lintels, girders and other structural members laid in situ or precast laid in position, or prestressed members cast in situ, complete in all respects:-					
		3000psi	Per Cft	2,541.00			
6	6/9('c)	Fabrication of mild steel reinforcement for cement concrete, including cutting, bending, laying in position, making joints and fastenings, including cost of binding wire and labour charges for binding of steel reinforcement (also includes removal of rust from bars):-					
		('c) Deformed bars (Grade-60)	Tons	9.22			
	22/9	Providing and fixing structural stee	Kg	346.07			
7	6/28	Providing embeding 10" (250 mm) wide ¼" (6 mm) thick rubber water stopper in expansion joints of R.C.C. roof slab complete in all respect	ft	1,270.50			
8	13/9(i)	Bitumen coating to plastered or cement concrete surface:- rate is multily by 2 for two coats i)20 lbs. per 100 Sft. (9.07 Kg per Sq.m)	Sft	4,658.50			
Total Amount of Drain for 605ft length							

PUNJAB INTERMEDIATE CITIES IMPROVEMENT INVESTMENT PROGRAM (PICIIP)

MISCELLANEOUS CIVIL WORKS FOR PARKING SHEDS AT ALLAMA IQBAL TOWN, SIALKOT

ELECTRICAL WORKS (MRS ITEMS)

BILL OF QUANTITIES

B - 3.2 ELECTRICAL WORKS

Bill No. 1 MRS ITEMS

Sr. No.	M.R.S 2nd BI-Annual 2020 (Chap/Item)	Description	Unit	Qty.	Rate (Rs.)		Amount (Rs.)
					In Figures	In Words	
1.0		**WIRING AND ACCESSORIES**					
1.1	10(a-ii)/24, 3(iii)/24, 14(i)/24, 32(ii)/24	Wiring of light or fan point from switch board/dimmer to the point with 3x1.5 mm^2 (P+N+E) PVC insulated single core stranded cables in 25 mm PVC conduit/pipe concealed in walls, columns and slabs including accessories, PVC box, 10 Amp. gang switch 1 or 2 way as required, one for each light or fan and installed as in specifications complete in all respects.	Each	4			
1.2	10(a-iii)/24, 3(iii)/24	Circuit wiring from DB MCBs to gang switches board and from switch board to another switch board with 3x2.5 mm^2 (P+N+E) PVC insulated single core stranded cables in 25mm PVC pipe/conduit concealed in walls, columns and slabs as required complete in all respects.	Each	2			
1.3	10(a-ii)/24, 3(iii)/24	The same as item No. 1.1(a) but from one light point to another light point.	Each	2			
1.4	10(a-iv)/24, 14(ii)/24, 36(i)/24, 3(iii)/24	10/13 Amp 3 pin universal flush mounting switch socket outlet wired from DB MCBs to first outlet with 3x4 mm^2 (P+N+E) single core cable stranded (away from switch board) in 25mm PVC pipe/conduit concealed in walls, columns and slabs as required complete in all respects.	Each	1			

PUNJAB INTERMEDIATE CITIES IMPROVEMENT INVESTMENT PROGRAM (PICIIP)

MISCELLANEOUS CIVIL WORKS FOR PARKING SHEDS AT ALLAMA IQBAL TOWN, SIALKOT

ELECTRICAL WORKS (MRS ITEMS)

BILL OF QUANTITIES

B - 3.2 ELECTRICAL WORKS

Bill No. 1 MRS ITEMS

1.5	10(a-iii)/24, 3(iii)/24	The same as item No.1.4 but wiring from one socket outlet to another socket outlet with 3x2.5 mm^2 (P+N+E) single core stranded cable in 25mm PVC pipe/conduit concealed in walls, columns and slabs as required complete in all respects.	Each	1			
1.6	10(a-v)/24, 3(iii)/24, 36(ii)/24, 14(ii)/24	20 Amp 3 pin universal flush mounting switch socket outlet wired from DB MCBs to independent socket outlet with 3x6 mm^2 (P+N+E) single core stranded cable (away from switchboard) in 25mm PVC pipe/conduit concealed in walls, columns and slabs as required complete in all respects.	Each	1			
TOTAL FOR MRS ITEMS							

PUNJAB INTERMEDIATE CITIES IMPROVEMENT INVESTMENT PROGRAM (PICIIP)

MISCELLANEOUS CIVIL WORKS FOR COVERED PARKING SHEDS AT ALLAMA IQBAL TOWN, SIALKOT

ELECTRICAL WORKS (NON-MRS ITEMS)

BILL OF QUANTITIES

B - 3.2 ELECTRICAL WORKS
Bill No. 2 NON-MRS ITEMS

Sr. No.	M.R.S 2nd BI-Annual 2020 (Chap/Item)	Description	Unit	Qty.	Rate (Rs.)		Amount (Rs.)
					In Figures	In Words	
		IMPORTANT NOTES (Applicable to all Electrical Items) All electrical items given below shall be read in conjuction with parts of the Specifications and electrical drawings except otherwise indicated. The Electrical Works include design, supply, transportation, installation, testing and commissioning of the following items of works as mentioned in this BOQ (unless specifically stated otherwise) including all material, labour, tools, accessories, related civil works, etc., as required for proper completion of each item as per specifications unless otherwise mentioned. (Any necessary material not mentioned in specifications, electrical drawings and here in this BOQ required for proper installation, testing and commissioning of equipment and materials shall be included in BOQ rates. Bid price shall be final. No Separate payment will be made for any such material. The Contractor shall be bond to provided any such material after award of this contract for proper completion of the Electrical Installation Works.) Contractor is also advised to inform missing items (if any) in BoQ at time submitting the tender. Supply, transportaion, storage at site, installation, testing and commissioning of the following items of work (unless specifically stated otherwise) including all material, labour, tools, accessories, etc. required for proper completion of each item as per specifications unless otherwise mentioned. (Any necessary material not mentioned in specifications, electrical drawings and here in this BOQ required for proper installation, testing and commissioning of equipment and materials shall be included in BOQ rates.					

PUNJAB INTERMEDIATE CITIES IMPROVEMENT INVESTMENT PROGRAM (PICIIP)

MISCELLANEOUS CIVIL WORKS FOR COVERED PARKING SHEDS AT ALLAMA IQBAL TOWN, SIALKOT

ELECTRICAL WORKS (NON-MRS ITEMS)

BILL OF QUANTITIES

B - 3.2 ELECTRICAL WORKS
Bill No. 2 NON-MRS ITEMS

Sr. No.	M.R.S 2nd BI-Annual 2020 (Chap/Item)	Description	Unit	Qty.	Rate (Rs.)		Amount (Rs.)
					In Figures	In Words	
1(A)		**POWER CABLE**					
1.1(A)		Copper conductor PVC/PVC 600/1000V cables including sockets and connections at both ends with Cu/Brass glands, lugs ets alongwith all accessories. The cable shall be drawn in cable trench or clipped on the wall or pulled in cable tray/PVC pipes or as required or as shown on drawings. (Imported copper shall be used. Verified documentary evidence for source of copper & PVC shall be furnished prior to manufacturing)					
a)	RA-16	2 core 10 mm^2 (For Security Guard Room)	Rft.	100			
b)	RA-17	4 core 10 mm^2 (For Area Lighting)	Rft.	2,950			
c)	RA-18	4 core 16 mm^2 From Transformer to MPB	Rft.	250			
1.2(A)		PVC insulated 450/750 Volt grade (Green - Yellow) unarmoured copper cable laid direct in ground, pulled in PVC pipe already laid, on surface of wall or cable trays etc. sockets and connections at both ends with Cu/Brass, glands, lugs ets alongwith all accessories all accessories as required or as shown on drawings (Imported copper shall be used. Verified documentary evidence for source of copper & PVC shall be furnished prior to manufacturing) as earth continuity conductor (ECC/CPC).					
a)	RA-20	1 core 10 mm^2	Rft.	3,050			
b)	RA-21	1 core 16 mm^2	Rft.	250			
c)	RA-22	1 core 25 mm^2	Rft.	150			

PUNJAB INTERMEDIATE CITIES IMPROVEMENT INVESTMENT PROGRAM (PICIIP)

MISCELLANEOUS CIVIL WORKS FOR COVERED PARKING SHEDS AT ALLAMA IQBAL TOWN, SIALKOT

ELECTRICAL WORKS (NON-MRS ITEMS)

BILL OF QUANTITIES

B - 3.2 ELECTRICAL WORKS
Bill No. 2 NON-MRS ITEMS

Sr. No.	M.R.S 2nd BI-Annual 2020 (Chap/Item)	Description	Unit	Qty.	Rate (Rs.)		Amount (Rs.)
					In Figures	In Words	
2.0		**LIGHT FITTINGS AND FANS**					
2.1	RA-26	Following LED Luminaries of suitable wattage make Philips, GE, Pierlite or approved equivalent suitable for the project requirements. Contractor to submit lighting design calculation to determine the adequacy of the wattage and should adjust the number of LEDs/wattage as per project lighting requirements. The fitting shall be approved by the Engineer.					
a)		Light Fixture Type LED Batten Ceiling/Wall/surface mounted mounted, 18W complete in all respect with allied accessories. The fitting shall be approved by the Engineer.	Each	2			
b)	RA-27	Wall bracket Light Fixture Type LED 12W energy saving lamp with holder and complete in all respect with allied accessories. The fitting shall be approved by the Engineer.	Each	1			
c)	RA-29	Wall bracket fan 20" sweep make (Royal, Pak, Millat or approved equivalent) capacitor type, copper winding complete with all accessories or approved equivalent. The fitting shall be approved by the Engineer.	Each	1			
3.0		**POLES & ACCESSORIES**					
a)	RA-31	10 m high single arm conical octagonal (hot dip) galvanized steel pole with extension arm luminaire arrangement, base plate, 2 Amp. SP MCB, (RC=10KA) circuit breaker, 05 Nos. Terminal block including end caps, base connection plates & end stopper etc. as shown on drawing.	Each	11			
b)	RA-32	Road Lighting Pole Foundation (Bitchmen Coating)	Each	11			

PUNJAB INTERMEDIATE CITIES IMPROVEMENT INVESTMENT PROGRAM (PICIIP)

MISCELLANEOUS CIVIL WORKS FOR COVERED PARKING SHEDS AT ALLAMA IQBAL TOWN, SIALKOT

ELECTRICAL WORKS (NON-MRS ITEMS)

BILL OF QUANTITIES

B - 3.2 ELECTRICAL WORKS

Bill No. 2 NON-MRS ITEMS

Sr. No.	M.R.S 2nd BI-Annual 2020 (Chap/Item)	Description	Unit	Qty.	Rate (Rs.)		Amount (Rs.)
					In Figures	In Words	
c)		Road Lighting LED Luminaries 90 Watt make Philips, GE, or approved equivalent, fully in compliance with the specified requirements suitable for the project requirements, fully IP 66 with corrosion resistant die cast aluminum housing, silicon gas kit, thermally hardened glass complete with LED drivers, surge protection and all accessories/ components required for the proper operation of the system. The luminaries shall be fully flexible for future upgrades and easy replacements for maintenance purposes. Contractor to submit lighting design calculation to determine the adequacy of the wattage and should adjust the number of LEDs/wattage as per project lighting requirements.	Each	11			
d)	RA-33	LED Luminaries Flood lights Tango LED 30W or approved equivalent fully IP 65 with corrosion resistant die cast aluminum housing, silicon gas kit, thermally hardened glass complete with LED drivers, surge protection and all accessories/ components required for the proper operation of the system.	Each	6			

PUNJAB INTERMEDIATE CITIES IMPROVEMENT INVESTMENT PROGRAM (PICIIP)

MISCELLANEOUS CIVIL WORKS FOR COVERED PARKING SHEDS AT ALLAMA IQBAL TOWN, SIALKOT

ELECTRICAL WORKS (NON-MRS ITEMS)

BILL OF QUANTITIES

B - 3.2 ELECTRICAL WORKS
Bill No. 2 NON-MRS ITEMS

Sr. No.	M.R.S 2nd BI-Annual 2020 (Chap/Item)	Description	Unit	Qty.	Rate (Rs.)		Amount (Rs.)
					In Figures	In Words	
e)	RA-34	PVC Junction box size 08"x06"x04" (for Flood Light connection) with frame claded 16 SWG, having high quality powder coated paint, color RAL 7032. suitable for connections with IP44 protection class, door, locking arrangement etc. and all other accessories as required for quality work.	Each	6			
-		Junction box size 08"x06"x04" (for Flood Light connection)					
-		01 No. 2 Amp. SP MCB, 6 kA					
-		05 Nos. Terminal block alongwith all accessories etc.,					
f)		3 Nos. 1 core 2.5 mm^2 Cu/PVC 450/750 Voltage grade cable (stranded conductor) (Imported copper shall be used. Verified documentary evidence for source of copper & PVC shall be furnished prior to manufacturing) from junction box to the fitting through the hollow of pole.					
-	RA-35	40 ft. cable is required for each pole and the unit is taken as No. Price per No.	Each	11			
g)	RA-36	Locally manufactured decorative gate light with 9W LED complete in all respect with allied accessories make Philips, GE, Pierlite or approved equivalent. The fitting shall be approved by the Engineer.	Each	2			
4.0		**<u>uPVC PIPE</u>**					
4.1		PVC pipe conduit with accessories suitable for laying single/multi-core cables.					
a)	RA-37	50 mm dia (Class-D)	Rft.	800			
b)	RA-38	100 mm dia (Class-B)	Rft.	1,400			
c)	RA-39	100 mm dia (Class-D)	Rft.	400			

PUNJAB INTERMEDIATE CITIES IMPROVEMENT INVESTMENT PROGRAM (PICIIP)

MISCELLANEOUS CIVIL WORKS FOR COVERED PARKING SHEDS AT ALLAMA IQBAL TOWN, SIALKOT

ELECTRICAL WORKS (NON-MRS ITEMS)

BILL OF QUANTITIES

B - 3.2 ELECTRICAL WORKS
Bill No. 2 NON-MRS ITEMS

Sr. No.	M.R.S 2nd BI-Annual 2020 (Chap/Item)	Description	Unit	Qty.	Rate (Rs.)		Amount (Rs.)
					In Figures	In Words	
5.0		**DISTRIBUTION BOARDS**					
5.1		D.Bs with DP incoming and SP outgoing miniature circuit breakers, Panel box SWG 16 powder coated RAL colour 7032, IP class 44/ 54 and with all accessories. alongwith all installation and operational accessories as per specification or as shown on the drawings.					
a)		**DB- Security Guard Rooom**					
		MATERIAL					
-	RA-41	01 No. Incoming 32 Amp MCB , DP, RC=10 kA	Each	1			
-		02 Nos. Outgoing 10 Amp MCB, SP, RC=10 kA					
-		01 No. Outgoing 20 Amp MCB, SP, RC=10 kA					
-		02 Nos. spare 10/20 Amp MCB, SP, RC=10 kA					
-		02 Nos. space 10/20 Amp MCB, SP, RC=10 kA					
-		Indication lights, digital voltmeter, digital ammeter, Panel box SWG 16 powder coated RAL colour 7032, IP class 44 and with all accessories.					

PUNJAB INTERMEDIATE CITIES IMPROVEMENT INVESTMENT PROGRAM (PICIIP)

MISCELLANEOUS CIVIL WORKS FOR COVERED PARKING SHEDS AT ALLAMA IQBAL TOWN, SIALKOT

ELECTRICAL WORKS (NON-MRS ITEMS)

BILL OF QUANTITIES

B - 3.2 ELECTRICAL WORKS
Bill No. 2 NON-MRS ITEMS

Sr. No.	M.R.S 2nd BI-Annual 2020 (Chap/Item)	Description	Unit	Qty.	Rate (Rs.)		Amount (Rs.)
					In Figures	In Words	
6.0		**<u>LV SWITCHGEAR / MAIN PANEL BOARD (MPB)</u>**					
6.1		LV Switchgear Panel/Main Panel Board of 14 SWG, IP class 44/54 & RAL 7032 including I/C and O/G following electrical items, foundation/base frame with all installation and operational accessories as per site requirements, as per tender specifications and drawings and as directed by the Engineer.					
(a)	RA-42	**<u>MPB</u>** **INCOMING**	No.	1			
-		01 No. 50 Amps TP (adj.) MCCB, RC= 25 kA, Icu=100%Ics					
-		01 No. VSS (07 position)					
-		01 No. 0-60 Volts AC DIGITAL Voltmeter					
-		03 Nos. 60/5 Amps Current Transformers					
-		01 No. ASS (R-Y-B-OFF)					
-		01 No. 0-60 Amps AC DIGITAL Ammeter					
-		06 Nos. RYB and ON OFF TRIP LED indication lights					
-		14 SWG steel sheet Panel RAL 7032, IP= 44/54 and all other accessories,					
		OUTGOING					
-		02 Nos. 16 Amp MCCB TP, (Adj.) RC=25kA, Icu=100%Ics with 25 Amp. Magnetic Contactor including Push button (ON/OFF) & Indication lights for Area / Shed Lighting.					
-		01 No. 32Amp MCB DP, (Adj.) RC=10kA, Icu=100%Ics					
-		01 No. Spare 16 Amp MCCB TP, (Adj.) RC=25kA , Icu=100%Ics					

PUNJAB INTERMEDIATE CITIES IMPROVEMENT INVESTMENT PROGRAM (PICIIP)

MISCELLANEOUS CIVIL WORKS FOR COVERED PARKING SHEDS AT ALLAMA IQBAL TOWN, SIALKOT

ELECTRICAL WORKS (NON-MRS ITEMS)

BILL OF QUANTITIES

B - 3.2 ELECTRICAL WORKS

Bill No. 2 NON-MRS ITEMS

Sr. No.	M.R.S 2nd BI-Annual 2020 (Chap/Item)	Description	Unit	Qty.	Rate (Rs.)		Amount (Rs.)
					In Figures	In Words	
-		01 No. Spare 16 Amp MCCB TP, (Adj.) RC=25kA, Icu=100%Ics with 25 Amp. Magnetic Contactor including Push button (ON/OFF) & Indication lights for Area / Shed Lighting.					
-		01 No. Spare 32Amp MCB DP, (Adj.) RC=10kA, Icu=100%Ics					
-		02 No. MCCB 25Amps TP, space					
-		All other accessories required for completion of the quality works including Cable gland and lugs etc.					
-		Electrolytic copper bus bar with electrical grade PVC mountings 3 for each, nuts, bolts and washers, control MCB etc. (100 Amps. R+Y+B N, 50 Hz, 415 V, AC) including cable glands at top/bottom entry for cable)					
-		Contractor shall submit the genuine certificate from the manufacturer/authorized agent clear by indicating the project name make/model/rating of MCCB, MCB, magnetic contactors, terminal blocks and voltmeters/ ammeter alongwith warranties.					
7.0		**EARTHING**					
7.1	RA-43	Earth point comprising of 10 ft. 5/8" dia. (16 mm dia) copper coated M.S. rods driven in ground. The earthing rods shall be completed with fixing clamps etc.	No.	6			

PUNJAB INTERMEDIATE CITIES IMPROVEMENT INVESTMENT PROGRAM (PICIIP)

MISCELLANEOUS CIVIL WORKS FOR COVERED PARKING SHEDS AT ALLAMA IQBAL TOWN, SIALKOT

ELECTRICAL WORKS (NON-MRS ITEMS)

BILL OF QUANTITIES

B - 3.2 ELECTRICAL WORKS
Bill No. 2 NON-MRS ITEMS

Sr. No.	M.R.S 2nd BI-Annual 2020 (Chap/Item)	Description	Unit	Qty.	Rate (Rs.)		Amount (Rs.)
					In Figures	In Words	
8.0		**TRANSFORMER**					
8.1		11/0.415 kV Pole mounted Transformer complete with all accessories as per WAPDA specifications and practice including all required works for proper completion of civil/material works as per specification.					
a)	RA-44	25 kVA	Job	1			
8.2	RA-45	Provision for the cost of security deposit and obtaining of 11 kV electrical connection with installation, testing and commissioning including all material, labour, tools, accessories, etc. required for proper completion of each item as per specification of WAPDA/DISCO.	Lumpsum	1			
TOTAL FOR NON-MRS ITEMS							
TOTAL (MRS + Non-MRS)							

PUNJAB INTERMEDIATE CITIES IMPROVEMENT INVESTMENT PROGRAM (PICIIP)
COVERED PARKING SHEDS AT ALLAMA IQBAL TOWN, SIALKOT
BILL OF QUANTITIES

B-3.3 SURVEILLIANCE SYSTEM WORKS

Sr. No	M.R.S 2nd BI-Annual 2021 (Chap/Item)	Description	Unit	Quantity	Rate (Rs.)		Amount (Rs)
					In Figures	In Words	
		Supply, wiring, tagging, termination, design, installation, testing and commissioning of following system complete in all respects including all material, labor, tools, accessories etc. as per latest applicable international standards and technical specificaitons attached herewith					
1		**Fixed Bullet Camera** Image Sensor : 5 MPX CMOS sensor 1/2.7” Lens Type : motor-zoom, IR Range : 45 meter Enclosure : aluminium outdoor housing	No	8			
2	RA-47	Poles 5m with Foundation	No.	5			
3	RA-48	16CH NVR (Network Video Recorder) with Supported protocols: ONVIF, RTSP, Recording speed up to 480 fps at 3840 x 2160, Supports resolution up to 3840 x 2160, Recorded stream size: 80 Mb/s in total from all cameras, Internal HDDs mount: 1, Monitor outputs: 1 (HDMI (4K UltraHD), HDMI, VGA), Intelligent image analysis.	No.	1			
4	RA-49	Hard Disk 6TB Surveillance SATA 3.5"	No.	1			
5	RA-50	FHD LED Display unit 55 inch including all accessories, wall mounting brackets, software and hardware	No.	1			
6	RA-51	Operator Workstation with VDU	No.	1			
7	RA-52	A4 size Color Printer	No.	1			
8	RA-53	8-PORT PoE Access Switch 8 PoE Ethernet ports which shall support IEEE 802.2af/at standards. PoE network port with IEEE802.3 af/at standards and shall have 2 x 1000Mbps optical fiber port SFPs	No	4			
9	RA-54	Managed distribution switch • 8 ports SFP slot & 1 port 10/100/1000 Gigabit Optical Fiber	No.	1			

PUNJAB INTERMEDIATE CITIES IMPROVEMENT INVESTMENT PROGRAM (PICIIP)
COVERED PARKING SHEDS AT ALLAMA IQBAL TOWN, SIALKOT
BILL OF QUANTITIES

B-3.3 SURVEILLIANCE SYSTEM WORKS

Sr. No	M.R.S 2nd BI-Annual 2021 (Chap/Item)	Description	Unit	Quantity	Rate (Rs.)		Amount (Rs)
					In Figures	In Words	
10	RA-55	UTP CAT-6 4-Pair Data Cable	m	130			
11	RA-56	HDPE pipe • size 40mm • outer dia 40mm • wall thickness 3.5mm • standard length: 125m/250m/1000m	m	430			
12	RA-57	27 U Data Cabinet for Superintendent office with fan, lock and glass door	No	1			
13	RA-58	12U Data Cabinet with fan, lock and glass door	No.	4			
14	RA-59	Hand Hole 0.9mx0.9mx0.9m	No.	5			
15	RA-60	**24 Core Fiber Optic Cable** , Standard G652-D, • Cable type Single Mode • Cable construction Loose tube • Layer of Aramid Yarn 5mm • Wavelength 1310/1550 nm • Max attenuation 0.36 db/km including Excavation/Backfilling and duct with all accessories	m	430			
16	RA-61	**24-Port ODF** with coupler, pigtails and Patch cords, complete accessories. Housing Material :Steel Allow for **any other item** required for completion of system not covered in BOQ or specifications / drawings in accordance with the same standards and brands shown and approved by consultant. All such items shall be covered in this item but complete description, item rates, quantity required and brands shall be mentioned separately and to be attached with the BOQ.	No	1			

PUNJAB INTERMEDIATE CITIES IMPROVEMENT INVESTMENT PROGRAM (PICIIP)
COVERED PARKING SHEDS AT ALLAMA IQBAL TOWN, SIALKOT
BILL OF QUANTITIES

B-3.3 SURVEILLIANCE SYSTEM WORKS

Sr. No	M.R.S 2nd BI-Annual 2021 (Chap/Item)	Description	Unit	Quantity	Rate (Rs.)		Amount (Rs)
					In Figures	In Words	
		Note: **1)** The Bidder shall provide the all BoQ items as per Technical Specificationtem of Bidding Documents brands shown and approved by consultant. **2)** Contractor is advised to confirm the cable running lengths as per site conditions before commencement of work.The Payment of cable shall be paid as per Running meter.					
		Total					

PUNJAB INTERMIDIATE CITIES IMPROVEMENT INVESTMENT PROGRAM (PICIIP)

MISCELLANEOUS CIVIL WORKS FOR PARKING SHEDS AT ALLAMA IQBAL TOWN, SIALKOT

BILL OF QUANTITIES

B-3.4 TRANSPORTATION WORKS

Item No.	*MRS, 2nd Bi - Annual 2021 Chap./ Item No*	*Description*	*Unit*	*Qty*	*Rate (Rs.)*		*Amount (Rs.)*
					In Figures	*In Words*	
1		**MRS ITEMS ROAD WORKS**					
1.1	Ch. 3 Item 5 (i) + Ch.3 Item 17 (a,b,c)	Earthwork in ordinary soil for embankments, including ploughing and mixing with blade grade or disc harrow or other suitable equipment, and compaction by mechanical means at optimum moisture content and dressing to designed section, complete in all respects:- i) 95% to 100% maximum modified AASHO dry density. (Material from **Borrow excavation** including **8km lead** & lift)	Cft	87,390			
1.2	Ch. 3 Item 25 (i)	Compaction of earthwork with power road roller, including ploughing, mixing, moistening earth to optimum moisture content in layers, etc.complete: i) 95% to 100% maximum modified AASHO dry density.	Cft	14,570			
1.3	18/3 (a-ii), 1/1	Providing and laying **subbase course** of crushed stone aggregate of approved quality and grade, including placing, mixing, spreading and compaction of subbase material to required depth, camber, grade to achieve 100% maximum modified AASHO dry density, (Including carriage of all material to site of work from **Sikhanwali Quarry Sargodha**).	Cft	14,570			
1.4	Ch. 6 item 6(a)(ii) 2 + 1-1	Providing and laying reinforced cement concrete (including prestressed concrete), using coarse sand and screened graded and washed aggregate, in required shape and design, including forms, moulds, shuttering, lifting, compacting, curing, rendering and finishing exposed surface, complete (but excluding the cost of steel reinforcement, its fabrication and placing in position, etc.):- (a) (ii) Reinforced cement concrete in slabod raft / strip foundation,base slab of coloum and retaining walls, etc and other structural member other than those mentioned in 5(a) (i) above not requiring form work (i.e. horizental **4000psi Concrete - Joint Reinforced Concrete Pavement (J.R.C.P)**	Cft	13,380			

PUNJAB INTERMIDIATE CITIES IMPROVEMENT INVESTMENT PROGRAM (PICIIP)

MISCELLANEOUS CIVIL WORKS FOR PARKING SHEDS AT ALLAMA IQBAL TOWN, SIALKOT

BILL OF QUANTITIES

B-3.4 TRANSPORTATION WORKS

Item No.	*MRS, 2nd Bi - Annual 2021 Chap./ Item No*	*Description*	*Unit*	*Qty*	*Rate (Rs.)*		*Amount (Rs.)*
1.5	Ch. 6 / 5(i) + 1-1	Cement concrete plain including placing, compacting, finishing and curing complete (including screening and washing of stone aggregate): **(i) Ratio 1: 4: 8**	Cft	9,710			
1.6	Ch. 6 / 9(c)	Fabrication of mild steel reinforcement for cement concrete, including cutting, bending, laying in position, making joints and fastenings, including cost of binding wire and labour charges for binding of steel reinforcement (also includes removal of rust from bars): **(c) Deformed bars (Grade-60)**	TON	23.00			
1.7	Ch. 18 / 16	Providing and laying expansion joint of neoprine strip 4"x¼" (100 mmx 6 mm) and plastic bitumen.	Rft	4,050			
1.8	Ch. 6 Item 49b(i)	Providing and fixing precast Edge kerb stone (4" to 6" thick) of 3500 PSI Compressive Strenght, embeded in PCC 1:2:4 over lean concrete 1:4:8 etc complete in all respect.b) with painting(i) 14" high	Rft	420			
				Sub Total: MRS Items (1)			

PUNJAB INTERMEDIATE CITIES IMPROVEMENT INVESTMENT PROGRAM (PICIIP)

MISCELLANEOUS CIVIL WORKS FOR PARKING SHEDS AT SAHIWAL AND SIALKOT

BILL OF QUANTITIES

B-4.0 EMP IMPLEMENTATION (SUMMARY)

Sr. No.	Description	Unit	Quantity	Rate per Unit (PKR)		Total Amount (PKR)
				In Figures	In Words	
4.1	EMP Cost for Parking Sheds at Sahiwal	Nos.	01	2,472,000		2,472,000
4.2	EMP Cost for Parking Sheds at Sialkot	Nos.	01	2,472,000		2,472,000
Total Amount (PKR)					**Total Amount (PKR)**	**4,944,000**

PUNJAB INTERMEDIATE CITIES IMPROVEMENT INVESTMENT PROGRAM (PICIIP)

MISCELLANEOUS CIVIL WORKS FOR PARKING SHEDS AT FREED TOWN SAHIWAL

BILL OF QUANTITIES

B-4.1 EMP IMPLEMENTATION

1	General Mitigation Measures	Unit	Quantity	Rate per Unit (PKR)		Total Amount (PKR)
				In Figures	In Words	
a	Water Bowsers for Water Sprinkling	Nos.	10	1500		15000
b	PPEs for Contractor Staff:					
b.i	Gloves	Nos.	30	2000		60000
b.ii	Helmets	Nos.	30	3000		90000
b.iii	Safety Shoes	Nos.	30	3000		90000
b.iv	Protective Eyewear	Nos.	30	1500		45000
b.v	Safety Harnesses	Nos.	30	3000		90000
b.vi	Face Masks	Nos.	100	20		2000
c	Spill Trays to prevent Oil/chemical contamination	Nos.	5	7000		35000
d	Waste Bins at Work Sites & Worker Camps for Housekeeping	Nos.	5	10000		50000
e	Metal Drums for storing of hazardous and non-hazardous materials from Work Sites & Worker Camps	Nos.	5	15000		75000
2	**Environmental Monitoring Personnel**	Nos.	12 (1 x 12 months)	80000		960000
3	**Annual Environmental Laboratory Monitoring Costs**					
a	Pre-Construction Phase ('One time' before Construction starts at 3 locations)					
a.i	24 hrly Air quality Monitoring (NEQS Parameters)	Nos.	3	30000		90000
a.ii	24 hrly Noise Monitoring (NEQS Parameters)	Nos.	3	30000		90000
b	Construction Phase (Quarterly basis at 3 locations)					
b.i	24 hrly Air quality Monitoring (NEQS Parameters)	Nos.	12	30000		360000
b.ii	24 hrly Noise Monitoring (NEQS Parameters)	Nos.	12	30000		360000
4	**Capacity Development & Training Programme**					
a	Pre-Construction Phase					
	Short Courses on EMP implementation	Nos.	1	30000		30000
b	Construction Phase					
	Short Seminars on Environmental Monitoring	Nos.	1	30000		30000
				Total Amount (PKR)		**2,472,000**

Note: The 'per unit' rates provides above are the 'minimum' rates to be quoted by bidder. In case bidder wishes to propose higher rates, it may do so in the appropriate column.

PUNJAB INTERMEDIATE CITIES IMPROVEMENT INVESTMENT PROGRAM (PICIIP)

MISCELLANEOUS CIVIL WORKS FOR PARKING SHEDS AT SIALKOT

BILL OF QUANTITIES

B-4.2 EMP IMPLEMENTATION

1	General Mitigation Measures	Unit	Quantity	Rate per Unit (PKR)		Total Amount (PKR)
				In Figures	In Words	
a	Water Bowsers for Water Sprinkling	Nos.	10	1500		15,000
b	PPEs for Contractor Staff:					
b.i	Gloves	Nos.	30	2000		60,000
b.ii	Helmets	Nos.	30	3000		90,000
b.iii	Safety Shoes	Nos.	30	3000		90,000
b.iv	Protective Eyewear	Nos.	30	1500		45,000
b.v	Safety Harnesses	Nos.	30	3000		90,000
b.vi	Face Masks	Nos.	100	20		2,000
c	Spill Trays to prevent Oil/chemical contamination	Nos.	5	7000		35,000
d	Waste Bins at Work Sites & Worker Camps for Housekeeping	Nos.	5	10000		50,000
e	Metal Drums for storing of hazardous and non-hazardous materials from Work Sites & Worker Camps	Nos.	5	15000		75,000
2	**Environmental Monitoring Personnel**	Nos.	12 (1 x 12 months)	80000		960,000
3	**Annual Environmental Laboratory Monitoring Costs**					
a	Pre-Construction Phase ('One time' before Construction starts at 3 locations)					
a.i	24 hrly Air quality Monitoring (NEQS Parameters)	Nos.	3	30000		90,000
a.ii	24 hrly Noise Monitoring (NEQS Parameters)	Nos.	3	30000		90,000
b	Construction Phase (Quarterly basis at 3 locations)					
b.i	24 hrly Air quality Monitoring (NEQS Parameters)	Nos.	12	30000		360,000
b.ii	24 hrly Noise Monitoring (NEQS Parameters)	Nos.	12	30000		360,000
4	**Capacity Development & Training Programme**					
a	Pre-Construction Phase					
	Short Courses on EMP implementation	Nos.	1	30000		30,000
b	Construction Phase					
	Short Seminars on Environmental Monitoring	Nos.	1	30000		30,000
			Total Amount (PKR)			**2,472,000**

Note: The 'per unit' rates provides above are the 'minimum' rates to be quoted by bidder. In case bidder wishes to propose higher rates, it may do so in the appropriate column.

List of Materials for Secured Advance

(Reference Sub-Clause 49.7 SCC)

Sr. No.	Type of Material	Limit for Payment*
1	Pre-Engineered or Pre-Fabricated Steel Building Materials	PKR 30 Million
2	Steel Reinforcement (Grade 60)	PKR 30 Million

***** prescribes upper limit for net amount of payment, at any time, which shall not exceed in any certification by the Project Manager against Contractor's Statement in accordance with SCC 49.7; the Project Manager shall, however, make sure that the quantities stored and accepted for payments do not exceed their consumption requirements for execution and completion of Works particularly when the Works are in advanced stage / nearing completion.

Section 5 - Eligible Countries

1. Afghanistan
2. Armenia
3. Australia
4. Austria
5. Azerbaijan
6. Bangladesh
7. Belgium
8. Bhutan
9. Brunei Darussalam
10. Cambodia
11. Canada
12. China, People's Republic of
13. Cook Islands
14. Denmark
15. Fiji Islands, Republic of
16. Finland
17. France
18. Georgia
19. Germany
20. Hong Kong, China
21. India
22. Indonesia
23. Ireland
24. Italy
25. Japan
26. Kazakhstan
27. Kiribati
28. Korea, Republic of
29. Kyrgyz, Republic of
30. Lao People's Democratic Republic
31. Luxembourg
32. Malaysia
33. Maldives
34. Marshall Islands
35. Micronesia, Federal States of
36. Mongolia
37. Myanmar
38. Nauru, Republic of
39. Nepal
40. Netherlands
41. New Zealand
42. Niue
43. Norway
44. Pakistan
45. Palau, Republic of
46. Papua New Guinea
47. Philippines
48. Portugal
49. Samoa
50. Singapore
51. Solomon Islands
52. Spain
53. Sri Lanka
54. Sweden
55. Switzerland
56. Tajikistan
57. Taipei,China
58. Thailand
59. Timor-Leste, Democratic Republic of
60. Tonga
61. Turkey
62. Turkmenistan
63. Tuvalu
64. United Kingdom
65. United States of America
66. Uzbekistan
67. Vanuatu
68. Viet Nam

Note: The list of current member countries is also available at http://www.adb.org/about/members

Section 6 – Employer's Requirements

This Section contains the Specifications, Drawings, Supplementary Information that describe the Works to be procured, Personnel Requirements, and Equipment Requirements.

Table of Contents

Specifications 6-2
Drawings.....6-3
Supplementary Information Regarding Works to Be Procured 6-4
Initial Environmental Examination (IEE) / Environmental Management Plan 6-5
Personnel Requirements.....6-4
Equipment Requirements.....6-6

Specifications
Attached as Annexure-A

NOTE: The Contractor shall submit a Site-Specific Environmental Management Plan (SSEMP) and Site-Specific Health and Safety Management Plan (SSHSMP) in compliance with PCC 81 and GCC 24.2 respectively in Section-8.

PROGRAM MANAGEMENT UNIT PICIIP

(LG&CD DEPARTMENT)

PUNJAB INTERMEDIATE CITIES IMPROVEMENT INVESTMENT PROGRAM (PICIIP)

CONSTRUCTION OF PARKING SHEDS FOR SOLID WASTE MACHINERY IN SAHIWAL AND SIALKOT CITY

Annexure-A

Technical Specifications

January, 2022

National Engineering Services Pakistan (Pvt) Limited
1-C, Block N, Model Town Ext, Lahore 54700, Pakistan
Phone: +92-42-99090000 Ext 458 Fax: +92-42-99231950
Email: info@nespak.com.pk, ephe@nespak.com.pk
http://www.nespak.com.pk

Clearance Code	3976/11/D/19(21)	Doc No.	3976-18	Rev No.	0

`

TABLE OF CONTENTS

Sr. No.	Description	Page No.

SECTION – 1: CARPENTRY AND JOINERY

1.0 SCOPE
2.0 APPLICABLE STANDARDS
3.0 MATERIALS
- **3.1 Timber**
  - 3.1.1 **Hard Wood**
  - 3.1.2 **Soft Wood:**
  - 3.1.3 **General Characteristics:**
  - 3.1.4 **Preservation of Wood:**
  - 3.1.5 **Adhesive:**
  - 3.1.6 **Nails and Screws:**
- **3.2 Ply Wood**

4.0 SAMPLES
- **4.1 Samples of Materials**
- **4.2 Shop Drawings**
- **4.3 Mock-up Sample**

5.0 FABRICATIONS
- **5.1 General**
- **5.2 Doors**

6.0 PROTECTION OF MATERIALS
7.0 WOODEN DOORS
- **7.1 Materials**
- **7.2 Ground, Blocking & Nailing Strips**
- **7.3 Exterior and Interior Door Frames**
- **7.4 Exterior and Interior Wooden Doors**
- **7.5 Door Shutters**
- **7.6 Fitting, Hanging and trimming**
- **7.7 Hardware**
- **7.8 Quality Assurance**
- **7.9 Manufacturer's Qualifications:**
- **7.10 Submittals**
- **7.11 Product Delivery, Storage and Handling**
- **7.12 Installation**

8.0 WOODEN RAILING
9.0 KITCHEN CABINET
- **9.1 Shop Drawings**
- **9.2 Installation**

10.0 WOODEN FLOOR & WALL PANELING
- **10.1 Shop Drawings**
- **10.2 Installation**

11.0 DEFECTIVE WORK
12.0 SURFACE PREPARATION
13 MEASUREMENT & PAYMENT
- **13.1 General**
- **13.2 Measurement**
- **13.3 Payment**

SECTION 2: MARBLE

1.0 SCOPE
2.0 SUBMITTALS
- **2.1 Manufacturer's/Supplier's Product Data**
- **2.1 Shop Drawings**
- **2.2 Samples**

3.0 DELIVERY, STORAGE AND HANDLING
4.0 TOLERANCES & TESTING
- **4.1 Tolerances**
- **4.2 Testing**

5.0 MATERIALS
- **5.1 General**
- **5.2 Beds and Backings**
- **5.3 Adhesives, Grouts and Sealants**
- **5.4 Setting Shims or Buttons**
- **5.5 Connection Materials**

6.0 FABRICATION
- **6.1 Fabrication Qualification**
- **6.2 General**
- **6.3 Contiguous Work**

7.0 EXECUTION
- **7.1 General**
- **7.2 Paving, Flooring, Skirting and Stair**
  - **7.2.1 Base**
- **7.3 Repair and Cleaning**
- **7.4 Finishing and Polishing**
- **7.5 Protection**

8.0 MEASUREMENT AND PAYMENT
- **8.1 General**
- **8.2 Measurement**
- **8.3 Payment**

SECTION 3: FLOOR AND WALL FINISHES

1.0 SCOPE

2.0 APPLICABLE STANDARDS

3.0 SUBMITTALS

4.0 MATERIAL
- **4.1 Cement**
- **4.2 Sand**
- **4.3 Coarse Aggregate**
- **4.4 Brick Ballast**
- **4.5 Water**
- **4.6 Cleaning Compound**
- **4.7 Division Strips**
- **4.8 Marble Chips**
- **4.9 Preservative Material**
- **4.10 Vinyl Tiles**
- **4.11 Terrazzo Tiles**
- **4.12 Ceramic Tiles / Pre-Polished Porcelain Tiles**
- **4.13 Cement Concrete Tile/ Interlocking Pavers**
- **4.14 Granite Slab/Tiles**
- **4.15 Acrylic Resin Coating (Graffiato)**
- **4.16 Stucco Work**

5.0 EXECUTION
- **5.1 Cement Concrete Flooring**
  - 5.1.1 Composition of Concrete
  - 5.1.2 Mixing Concrete
  - 5.1.3 Construction
- **5.2 Terrazzo Flooring**
  - 5.2.1 Mix
  - 5.2.2 Preparation for Terrazzo
  - 5.2.3 Division Strips
  - 5.2.4 Laying Terrazzo
  - 5.2.5 Seasoning
  - 5.2.6 Surface
  - 5.2.7 Finishing
  - 5.2.8 Protection
  - 5.2.9 Cleaning and Coating
  - 5.2.10 Dado/Skirting
- **5.3 Installation of Tile Flooring**
  - 5.3.1 General
  - 5.3.2 Ceramic Tiles/Porcelain Tiles
  - 5.3.3 Cement Concrete Tiles
  - 5.3.4 Concrete Interlocking Pavers
  - 5.3.5 Terrazzo Tiles Flooring
  - 5.3.6 PVC Tiles
  - 5.3.7 PVC Tiles (Anti static)
    - 5.3.7.1 Preparation of Base
    - 5.3.7.2 Fitting the Copper Mesh
    - 5.3.7.3 Fixing PVC Floor Tiles (Anti-Static)
    - 5.3.7.4 Traffic
    - 5.3.7.5 Testing

5.3.7.6 Equipment:
5.3.7.7 Method
5.4 Washed Terrazzo
5.4.1 Mix
5.4.2 Preparation for Terrazzo
5.4.3 Division Strips
5.4.4 Laying Terrazzo Topping
5.4.5 Finishing
5.4.6 Protection
5.4.7 Cleaning and Coating
5.5 Granite Slab/Tiles
5.5.1 Repair and Cleaning
5.5.2 Protection
5.6 Acrylic Resin Coatings (Graffiato / Sandtex)
6.0 MEASUREMENT AND PAYMENT
6.1 General
6.2 Measurement
6.3 Payment

SECTION – 4: LOW VOLTAGE (LV) DISTRIBUTION BOARDS

1.0 SCOPE OF WORK
2.0 GENERAL
3.0 APPLICABLE STANDARDS/CODES
4.0 MATERIAL
4.1 **Sheet Metal Work**
4.2 **Components**
4.2.1 **Bus Bars**
4.2.2 **Moulded Case Circuit Breaker (MCCB)**
4.2.3 **Miniature Circuit Breaker (MCB)**
4.2.4 **Push Buttons**
4.2.5 **AC Voltmeters**
4.2.6 **Ammeters**
4.2.7 **Voltmeter Selector Switch**
4.2.8 **Current Transformers**
4.2.9 **Air Break Magnetic Contactors**
4.2.10 **Indicating Lamps**
4.2.11 **Line up Terminals**
5.0 INSTALLATION
6.0 MEASUREMENT AND PAYMENT
6.1 **General**
6.2 **LV Distribution Board**
6.2.1 **Measurement**
6.2.2 **Payment**

SECTION-5: SPECIFICATIONS OF LED LIGHTS

1.0 SCOPE OF WORK
- **1.1 Type of Light Fixtures**
- **1.2 Optics**
- **1.3 Warranty/Maintenance**
- **1.4 LED Driver/Electronic Control Gear for LED Modules**
- **1.5 LED Chip**
- **1.6 Thermal Management**
- **1.7 Photometrics**
- **1.8 Technical Data and Drawings**

2.0 INSTALLATION

3.0 MEASUREMENT AND PAYMENT

SECTION – 6: MEDIUM VOLTAGE (MV) CABLE

1.0 SCOPE OF WORK

2.0 GENERAL

3.0 APPLICABLE STANDARD/CODES

4.0 MATERIAL
- 4.1 **MV Cable**
  - 4.1.1 **Conductor Material**
  - 4.1.2 **Insulation**
  - 4.1.3 **Shielding**
  - 4.1.4 **Assembly**
  - 4.1.5 **Armour**
  - 4.1.6 **Oversheath**
- 4.2 **Cable Reels**
- 4.3 **Factory Tests**

5.0 INSTALLATION
- 5.1 **General**
- 5.2 **Underground Cables**
- 5.3 **Cable Marker**

6.0 MEASUREMENT AND PAYMENT
- 6.1 **General**
- 6.2 **MV Cable**
  - 6.2.1 **Measurement**
  - 6.2.2 **Payment**
- 6.3 **Excavation of Cable Trench**
  - 6.3.1 **Measurement**
  - 6.3.2 **Payment**
- 6.4 **Backfilling of Cable Trench**
  - 6.4.1 **Measurement**
  - 6.4.2 **Payment**
- 6.5 **Cable Marker**
  - 6.5.1 **Measurement**
  - **6.5.2 Payment**

SECTION – 7: LOW VOLTAGE CABLE

1.0 SCOPE OF WORK
2.0 GENERAL
3.0 APPLICABLE STANDARDS/CODES
4.0 MATERIAL
4.1 **General**
4.1.1 **Phase Identification**
4.1.2 **Cable Accessories**
5.0 INSTALLATION
5.1 **Conduit Wiring**
5.2 **Cables on Surface**
5.3 **Cables in flexible/rigid conduits on surface**
5.4 **Underground Cable**
6.0 MEASUREMENT AND PAYMENT
6.1 **General**
6.2 **Light Circuit Wiring**
6.2.1 **Measurement**
6.2.2 **Payment**
6.3 **Light/Fan Point/Point to Point Wiring**
6.3.1 **Measurement**
6.3.2 **Payment**
6.4 **Wiring of Lights Directly Controlled from Distribution Board/Local MCBs/Wiring of Push Buttons**
6.4.1 **Measurement**
6.4.2 **Payment**
6.5 **Wiring of 5Amps, 250Volt Combined 2 & 3 pin Switched Socket Unit from LV switchboard/Distribution Board**
6.5.1 **Measurement**
6.5.2 **Payment**
6.6 **Wiring between 5Amps, 250Volt Combined 2 & 3 pin Switched Socket Units**
6.6.1 **Measurement**
6.6.2 **Payment**
6.7 **Wiring of 15Amps, 250Volt 3 pin Switched Socket Unit from LV Switchboard/Distribution Board/Bus Bars**
6.7.1 **Measurement**
6.7.2 **Payment**
6.8 **Wiring between 15Amps, 250Volt 3 pin Switched Socket Units**
6.8.1 **Measurement**
6.8.2 **Payment**
6.9 **Wiring of 20Amps, 250Volt 3 pin Switched Socket Unit from LV Switchboard/ Distribution Board**
6.9.1 **Measurement**
6.9.2 **Payment**
6.10 **LV Cables**
6.10.1 **Measurement**

6.10.2 **Payment**
6.11 **Excavation of Cable Trench**
6.11.1 **Measurement**
6.11.2 **Payment**
6.12 **Backfilling of Cable Trench**
6.12.1 **Measurement**
6.12.2 **Payment**

SECTION – 8: SWITCH FITTINGS & ACCESSORIES

1.0 SCOPE OF WORK
2.0 GENERAL
3.0 APPLICABLE STANDARDS/CODES
4.0 MATERIAL
4.1 **One Way Switches - Indoor type**
4.2 **Two Way Switches - Indoor Type**
4.3 **Switched Socket Outlets**
4.4 **Fan Controller**
4.5 **Outlet Box**
5.0 INSTALLATION
5.1 **General**
5.2 **Light Control Switches**
5.3 **Switched Socket Outlets**
5.4 **Fan Controllers/Light Dimmers**
6.0 MEASUREMENT AND PAYMENT
6.1 **General**
6.2 **Light Control Switches**
6.2.1 **Measurement**
6.2.2 **Payment**
6.3 **Switched Socket Outlets**
6.3.1 **Measurement**
6.3.2 **Payment**

6.4 **Fan Controllers**
6.4.1 **Measurement**
6.4.2 **Payment**
6.5 **Light Dimmers**
6.5.1 **Measurement**
6.5.2 **Payment**

SECTION – 9: CONDUITS AND PIPES

1.0 SCOPE OF WORK
2.0 GENERAL
3.0 APPLICABLE STANDARD/CODES
4.0 MATERIAL

4.1 PVC Conduits and Accessories
4.2 PVC Pipe and Accessories
5.0 INSTALLATION
5.1 Concealed Conduits
5.2 PVC Pipe
6.0 MEASUREMENT AND PAYMENT
6.1 General
6.2 PVC Conduits
6.2.1 Measurement
6.2.2 Payment
6.3 PVC Pipes
6.2.1 Measurement
6.2.2 Payment

SECTION – EARTHING (AS APPLICABLE)

1.0 SCOPE OF WORK
2.0 GENERAL
3.0 APPLICABLE STANDARDS/CODES
4.0 **MATERIAL**
4.1 **Earth Electrode (Plate Type)**
4.2 **Earth Electrode (Rod Type)**
4.3 **Earth Electrode (BoreType)**
4.4 **Earthing Lead**
4.5 **Earth Continuity Conductor**
4.6 **Earth Connecting Point**
5.0 INSTALLATION
5.1 **General**
5.2 **Earth Electrode (Plate Type)**
5.3 **Earth Electrode (Bore Type)**
5.4 **Earth Electrode (Rod Type)**
5.5 **Earth Continuity Conductor**
5.6 **Earth Connecting Point**
6.0 MEASUREMENT AND PAYMENT
6.1 **General**
6.2 **Earth Electrode**
6.2.1 **Measurement**
6.2.2 **Payment**
6.3 **Earth Continuity Conductor**
6.3.1 **Measurement**:
6.3.2 **Payment**
6.4 **Earth Connecting Point**
6.4.1 **Measurement**
6.4.2 **Payment**

SECTION – 11: MEDIUM VOLTAGE SWITCHBOARD

1.0 SCOPE OF WORK
2.0 GENERAL
3.0 APPLICABLE STANDARDS/CODES
4.0 MATERIAL
4.1 **Medium Voltage Switchboard**
4.1.1 **Capacity and Basic Data**
4.2 **Circuit Breaker**
4.3 **Bus Bars**
4.4 **Current Transformers**
4.5 **Potential Transformers**
4.6 **Capacitor Shunt Trip Unit**
4.7 **Protective relays**
4.8 **Meters & Selector Switches**
4.8.1 **Ammeter and Voltmeter**
4.8.2 **Selector Switches**
4.8.3 **kWh and kVarh Meters**
4.8.4 **Alarm Indication**
4.9 **Tools**
5.0 INSTALLATION
6.0 MEASUREMENT AND PAYMENT
6.1 **General**
6.2 **Medium Voltage Switchboard**
6.2.1 **Measurement**
6.2.2 **Payment**

SECTION – 12: LOW VOLTAGE SWITCHBOARDS, MAINTENANCE BY-PASS SWITCH, POWER FACTOR IMPROVEMENT PLANT AND BUS TIE DUCT

1.0 SCOPE OF WORK
2.0 GENERAL
2.1 **Low Voltage (415 Volt) Switchboard**
2.2 **Maintenance By-Pass Switch (MBS)**
2.3 **Power Factor Improvement (PFI) Plant**
2.4 **Low Voltage (415 Volt) Bus Tie Duct (BTD)**
3.0 APPLICABLE STANDARDS/CODES
4.0 MATERIAL
4.1 **Low Voltage (415 Volt) Switchboard**
4.1.1 **Sheet Metal Work**
4.1.2 **Components**
4.1.2.1 **Bus Bars**
4.1.2.2 **Moulded Case Circuit Breaker (MCCB)**
4.1.2.3 **Miniature Circuit Breaker (MCB)**

4.1.2.4 **Air Break Magnetic Contactors**
4.1.2.5 **Push Buttons**
4.1.2.6 **AC Voltmeters**
4.1.2.7 **Ammeters**
4.1.2.8 **Voltmeter Selector Switch**
4.1.2.9 **Ampere meter Selector Switch**
4.1.2.10 **Indicating Lamps**
4.1.2.11 **Current Transformers**
4.1.2.12 **Line up Terminals**
4.2 **Low Voltage (415 Volt) Bus Tie Duct**
4.2.1 **Sheet Metal Work**
4.2.2 **Components**
4.2.2.1 **Bus Bars**
4.2.2.2 **Insulators**
4.2.2.3 **Insulating supports**
4.2.2.4 **Nuts, Bolts and Washers**
4.3 **Power Factor Improvement (PFI) Plant**
4.3.1 **Sheet Metal Work**
4.3.2 **Components**
4.3.2.1 **Bus Bars**
4.3.2.2 **Insulators**
4.3.2.3 **Insulating supports**
4.3.2.4 **Nuts, Bolts and Washers**
4.3.2.5 **Power Factor Regulator**
4.4 **Maintenance By-Pass Switch (MBS)**
4.4.1 **Sheet Metal Work**
4.4.2 **Components**
4.4.2.1 **Bus Bars**
4.4.2.2 **Insulators**
4.4.2.3 **Insulating supports**
4.4.2.4 **Nuts, Bolts and Washers**
4.4.2.5 **Air Break Magnetic Contactors**
4.4.2.6 **AC Voltmeters**
4.4.2.7 **Voltmeter Selector Switch**
4.4.2.8 **Indicating Lamps**
4.4.2.9 **Line up Terminals**
5.0 INSTALLATION
5.1 **Low Voltage (415 Volt) Switchboard**
5.2 **Low Voltage (415 Volt) Bus Tie Duct (BTD)**
5.3 **Power Factor Improvement (PFI) Plant**
5.4 **Maintenance By-Pass Switch (MBS)**
6.0 MEASUREMENT AND PAYMENT
6.1 **General**
6.2 **Low Voltage Switchboard**
6.2.1 **Measurement**
6.2.2 **Payment**

6.3 **Low Voltage Bus-Tie Duct**
6.3.1 **Measurement**
6.3.2 **Payment**
6.4 **Power Factor Improvement Plant**
6.4.1 **Measurement**
6.4.2 **Payment**
6.5 **Maintenance By-Pass Switch**
6.5.1 **Measurement**
6.5.2 **Payment**

SECTION – 13: MISCELLANEOUS ITEMS

1.0 SCOPE OF WORK
2.0 GENERAL
3.0 APPLICABLE STANDARDS/CODES
4.0 MATERIAL
4.1 **MCB/MCCB Enclosed in Sheet Steel Box**
4.2 **Ceiling Fan**
4.3 **Ceiling Hook for fan**
4.4 **Wall Bracket Fan**
4.5 **Exhaust Fans**
5.0 INSTALLATION
5.1 **General**
5.2 **MCB/MCCB Enclosed in Sheet Steel Box**
5.3 **Ceiling Fan**
5.4 **Wall Bracket Fan**
5.5 **Exhaust Fans**
6.0 MEASUREMENT AND PAYMENT
6.1 **General**
6.2 **MCB/MCCB Enclosed in Sheet Steel**
6.2.1 **Measurement**
6.2.2 **Payment**
6.3 **Ceiling Fans**
6.3.1 **Measurement**
6.3.2 **Payment**
6.3 **Wall Bracket Fans**
6.3.1 **Measurement**
6.3.2 **Payment**
6.3 **Exhaust Fans**
6.3.1 **Measurement**
6.3.2 **Payment**

SECTION – 14: TELEPHONE SYSTEM

1.0 SCOPE OF WORK
2.0 GENERAL

3.0 APPLICABLE STANDARDS / CODES
4.0 MATERIAL
4.1 **Digital Telephone Exchange (EPABX)**
4.2 Main Distribution Frame
4.3 Power Supply
4.4 **Telephone Sets**
4.5 **Auto-Attendant System**
4.6 **Call Accounting and Billing System**
4.7 **Software Features**
4.8 **Telephone cables**
4.9 **PVC conduits on surface**

4.10 Spare Parts, Tools and Test Equipment
5.0 INSTALLATION
5.1 **Digital Telephone Exchange (EPABX)**
5.2 **Main Distribution Frame**
5.3 **Power Supply**
5.4 **Telephone Sets**
5.5 **Telephone cables**
5.6 **PVC conduits**
6.0 TRAINING
7.0 MEASUREMENT AND PAYMENT
7.1 **General**
7.2 **Digital Telephone Exchange (EPABX)**
7.2.1 **Measurement**
7.2.2 **Payment**
7.3 **Main Distribution Frame**
7.3.1 **Measurement**
7.3.2 **Payment**
7.4 **Power Supply**
7.4.1 **Measurement**
7.4.2 **Payment**
7.5 **Telephone Sets**
7.5.1 **Measurement**
7.5.2 **Payment**
7.6 **Telephone cables**
7.6.1 **Measurement**
7.6.2 **Payment**
7.7 **PVC Conduits**
7.7.1 **Measurement**
7.7.2 **Payment**

SECTION – 15: GENERAL SPECIFICATIONS FOR ELECTRICAL SYSTEMS

1.0 SCOPE OF WORK
2.0 RULES & REGULATIONS
3.0 AMBIENT CONDITIONS

4.0 MARKINGS
5.0 SYSTEM DATA
6.0 STANDARDS
7.0 MATERIALS & WORKMANSHIP
8.0 DEVIATIONS
9.0 EQUIPMENT AND MATERIALS
10.0 DRAWINGS, AND DATA TO BE FURNISHED BY THE CONTRACTOR
11.0 PRODUCT DELIVERY, STORAGE AND HANDLING
12.0 MANUFACTURER'S INSTRUCTIONS
13.0 GUARANTEE
14.0 INSTALLATION INSTRUCTIONS
15.0 PRESHIPMENT INSPECTION AND TESTING
15.1 **General**
15.2 **Pre-shipment Factory Tests**
15.2.1 **MV & LV Switchgear, Generators, Transformers, Maintenance-Bypass Switch & Communication Systems Equipment**
15.2.2 **Insulation Resistance Test**
15.3 **Field Tests**
15.3.1 **General**
15.3.2 **Insulation Resistance Test**
15.3.3 **Earth Resistance Test**
15.4 **Completed Tests**
16.0 ASSOCIATED CIVIL WORKS
17.0 EXPENSES TO BE BORNE BY THE CONTRACTOR
18.0 TEST CERTIFICATES TO BE FURNISHED BY THE CONTRACTOR
19.0 PAYMENT

SECTION – 16: ELECTRICAL WORKS

1.0 ELECTRIC WORKS
1.1 DESCRIPTION
1.2 GENERAL
1.3 APPLICABLE REGULATIONS AND STANDARDS/CODES
1.4 TESTING
1.4.1 Factory Tests
1.4.2 Field Tests
2.0 POLES FOR ROAD LIGHTING
2.1 SCOPE OF WORK
2.2 APPLICABLE STANDARDS/CODES
2.3 CONSTRUCTION OF POLES
2.4 INSTALLATION
2.4.1 Data to be submitted
2.5 TESTS
2.5.1 General

2.5.2 Inspection
2.5.3 Sample Test
2.5.4 Galvanizing
2.5.5 Service Cutouts
2.6 MEASUREMENT AND PAYMENT
2.6.1 Measurement
2.6.2 Payment
3.0 LUMINARIES
3.1 Description of Scope of Contract
3.2 Major Contract Components
3.2.1 Lighting Installation Period
3.2.2 Specifications
3.3 General Requirements
3.3.1 Housing
3.3.2 Optics
3.3.3 Surge Protection
3.3.4 IP Protection / Impact Resistance
3.3.5 Design of Fixture w.r.t Maintenance
3.3.6 Mounting
3.3.7 Future Compatibility
3.4 LED Driver/Electronic Control Gear for LED Modules
3.5 LEDs

3.6 Thermal Management
3.7 Photometric
3.8 Warranties & Maintenance
3.9 Applicable Standards and Codes
3.10 Technical and Descriptive Data and Drawings
3.11 International Independent Laboratories
4.0 CONDUITS AND PIPES
4.1 DESCRIPTION
4.2 GENERAL
4.3 APPLICABLE STANDARD/CODES
4.4 MATERIAL
4.4.1 PVC Conduits and Accessories
4.4.2 PVC Pipe and Accessories
4.5 INSTALLATION
4.5.1 Concealed Conduits
4.5.2. PVC Pipe
4.6 MEASUREMENT AND PAYMENT
4.6.1 General
4.6.2 PVC Conduits
4.6.2.1 Measurement
4.6.2.2 Payment
4.6.3 PVC Pipes
4.6.3.1 Measurement

4.6.3.2 Payment
5.0 LT CABLES
5.1 DESCRIPTION
5.2 MATERIAL REQUIREMENTS
5.2.1 Cable Sizes
5.2.2 Phase Identification
5.2.3 Cable Accessories
5.2.4 DATA TO BE SUBMITTED
5.3 CONSTRUCTION REQUIREMENTS
5.4 MEASUREMENT AND PAYMENT
5.4.1 Measurement
5.4.2 Payment
6.0 LIGHTING CONTROL PANEL
6.1 DESCRIPTION
6.2 MATERIAL REQUIREMENTS
6.2.1 Moulded Case Circuit Breakers
6.2.2 Magnetic Contractors
6.2.3 Indicating Lamps
6.2.4 Line-up Terminals
6.2.5 Data to be Submitted
6.3 CONSTRUCTION REQUIREMENTS
6.4 MEASUREMENT AND PAYMENT
6.4.1 Measurement
6.4.2 Payment
7.0 EARTHING
7.1 DESCRIPTION
7.2 MATERIAL REQUIREMENTS
7.2.1 Earthing by Earth Rods
7.2.2 Earthing Lead
7.2.3 Earth Continuity Conductor
7.2.4 Data to be Submitted
7.3 CONSTRUCTION REQUIREMENTS
7.3.1 General
7.3.2 Earth Continuity Conductor
7.3.3 Earth Resistance Test
7.4 MEASUREMENT AND PAYMENT
7.4.1 Measurement
7.4.2 Payment

SECTION-17: PLUMBING WORKS

1.0 PLUMBING WORKS FOR WATER SUPPLY SYSTEM
1.1. SYSTEM DESCRIPTION
1.2. COLD AND HOT WATER PIPES & FITTINGS
1.3. INSTALLATION OF SANITARY APPLIANCES
1.3.1 Bath Tub
1.3.2 Shower Mixer
1.3.3 Plumbing Fittings and Accessories
1.3.4 Water Service Connection
1.3.5 Piping Materials
1.3.6 Piping Joints
1.3.7 Testing of Mains
1.3.8 Sterilization of Main
1.3.9 Valves
1.3.10 Schedule of Valves
1.3.11 Tap
1.3.12 Pressure Gauges
1.3.13 Connector (Pipe Line Vibration Eliminator)
1.3.14 Water Level Controllers
2.0 PIPE WORK AND FITTINGS
2.1 PIPE SUPPORTS
2.2 PIPE SLEEVES
2.3 PIPE WORK INSTALLATION
3.0 SANITARY AND WASTE WATER DRAINAGE SYSTEMS
3.1 SOIL AND WASTE PIPES
3.2 RUBBER RINGS
3.3 SCHEDULE OF MATERIALS AND EQUIPMENT
3.3.1 Soil and Waste Pipes
3.3.2 Storm Water Drainage Pipes
3.3.3 Floor Traps, Gully Traps, Concrete Sump, Inspection Chamber Covers & Electric Heaters
3.3.4 Pipe Joints
3.4 UNDERGROUND DRAINING SYSTEM
3.5 INSTALLATION
3.5.1 Excavation
3.5.2 Backfilling
3.5.3 Pipeline Setting Out
3.5.4 Concreting Works
3.5.5 Installation of Sanitary Appliances
3.6 MATERIALS AND MANUFACTURERS
3.6.1 WATER SUPPLY SYSTEM
3.6.2 SEWERAGE SYSTEM

SECTION – 1: CARPENTRY AND JOINERY

1.0 SCOPE

The work covered under this section of Specifications consists of providing all material, labour, plant, equipment, appliances and performing all operations connected with the fabrication and erection of all woodwork, mill work, construction assembly, surface finish treatment and building of all cabinet type items, supports of wood or metal and incidentals, associated woodwork appurtenances, procuring and applying preservatives, installation of "Finish Hard Ware" in connection with finish woodwork as per details shown on the Drawings or as directed by the Engineer. The scope of this section is covered with detailed specifications as laid down herein.

2.0 APPLICABLE STANDARDS

Latest editions of following British and ISO Standards are relevant to these specifications wherever applicable.

ISO (International Organisation for Standardisation)

1891 Bolts, screens, nuts and accessories-Terminology and nomenclature.
1097 Plywood - Measurement of dimensions of panels.
1098 Veneer ply wood for general use-General requirements.
2427 Veneer ply wood with rotary cut veneer for general use- Classification by appearance of panels with outer veneer of beech.
2429 Ply wood - Veneer ply wood with rotary cut veneer for general use-Classification by appearance of panels with outer veneers of brand leaved species of tropical Africa.
3804 Ply wood-Determination of dimension of test pieces.
3805 Ply wood-Determination of density.
3806 Ply wood-Determination of moisture content.
6442 Door leaves-Measurement of defects of general flatness.
6443 Door leaves-Measurement of dimensions and of defects of squareness.
6444 Door leaves-Test of behaviour under humidity variations.

BSI (British Standards Institution)

459 Wooden doors.
1186 Quality of timber and workmanship in joinery.
1127 Hinges
1331 Builder's hardware for housing.
1567 Wood door frames and linings nails.
1202 Nails
1203 Specifications for synthetic resin adhesive for ply wood.
1204 Synthetic resin adhesives for wood.
1282 Guide to choice, use and application of wood preservatives.
1494 Fixing accessories for building purposes.
1579 Connectors for timber.
3842 Treatment of ply wood with preservatives.

3.0 MATERIALS

3.1 Timber

3.1.1 Hard Wood

Hard wood shall comprise of Oak, beech, Walnut Mahogany, Teak, Iroko and Sheesham.

3.1.2 Soft Wood:

All soft wood shall consist of pines, spruce, hemlock and douglas fir or cedrous deader (referred in the document as deader) having density of 500-600 kg/square metre , wood locally known as 'Partial' to be used in framing where specified.

3.1.3 General Characteristics:

All the timber shall be in accordance with the requirements of BSI No: 1186, 'Quality of Timber and Workmanship in Joinery'.

The whole of the timber shall be from the heart of sound and fully grown tree, uniform in substance, straight in fibber, first class quality properly seasoned, free from large or loose deadknots, open shakes and excessive sapwood. The scantlings of all timbers shall be bright, sound and square edged. The moisture content of timber shall not be more than ten (10) percent.

3.1.4 Preservation of Wood:

Prior to installation of all finish wood works in their respective positions, preservatives shall be applied to safeguard the wood work against fungus, termite and bores.

The preservatives shall be of the best available quality as approved by the Engineer. The method of application shall be strictly in accordance with the manufacturer's instructions. The treatment and application of all the preservatives shall comply with the requirements of BS-CP 98:1964.

3.1.5 Adhesive:

The adhesives shall conform to the requirements of BSI No. 745 "Animal Glues for Wood" or as directed and approved by the Engineer.

3.1.6 Nails and Screws:

All nails and screws shall comply with requirements of BSI NO. 1202 and BSI NO. 1210 respectively.

3.2 Ply Wood

3.2.1 The ply wood shall comply in all respects with BSI No. 1455:1963. All the ply wood shall only be obtained from manufacturers approved by the Engineer.

Ply wood used for doors, panellings and other similar works shall be to the thickness and size as shown on the Drawings or as directed by the Engineer. The grade shall be first quality and the face and back shall be free from end joints, dead knots, overlaps, patches and other similar defects. The surfaces shall be free, smooth for painting or polishing.

3.2.2 The veneer shall be of the required thickness and quality including base veneer and shall be impregnated with an approved adhesive and machine compressed. Such machine pressed veneered wood shall be fixed on all sides of the inner core wood (soft wood of approved quality) after it has been treated with water resistant hot setting glue.

4.0 SAMPLES

4.1 Samples of Materials

All samples of the material used for the work under this Section of Specification shall be approved by the Engineer and same type of material shall be used throughout the work. If the Engineer desires to get the material tested, this will be got done by the Contractor at his own cost from a laboratory approved by the Engineer.

4.2 Shop Drawings

The Contractor shall submit detailed shop Drawings on the basis of the drawings, specifications including fittings, fixtures and hardwares to the Engineer before fabrication.

4.3 Mock-up Sample

After approval of shop drawings and tests etc., the contractor shall submit at his own cost one mock-up sample of each type of wood works complete with all fixing, fixtures accessories prior to the actual fabrication of the bulk.The samples shall be returned to the Contractor for incorporation in the works after installation of at least 80% of the works.

5.0 FABRICATIONS

5.1 General

'Unwrought' timber shall be used. Sawing shall be done true to the size and dimensions to finally meet the requirements of specified sizes and dimensions of the finished work.

All framing shall be joined as shown on the Drawings or as directed by the Engineer. All joints shall be secured with sufficient number of nails. The Contractor shall perform all necessary mortising, tensioning, grooving, matching, tonguing, housing, rebating and all operations required for the correct jointing. The Contractor shall also provide all metal plates, screws, nails and other fixing material that may be ordered by the Engineer for the proper execution of the joinery work. Fabrication that develop defects due to bad workmanship or unsound materials not conforming to these specifications and the directions of the Engineer, shall be cut out and replaced at Contractor's own expense before the expiry of the maintenance period.

5.2 Doors

5.2.1 Verify design and size of doors required for each opening. Door thicknesses shall be 40 mm unless otherwise indicated.

5.2.2 Fabricate flush wood doors in accordance with the following requirements.

Cores: Edging of doors and shutters shall be of hard wood and cores shall be soft wood (solid core) planed to a smooth uniform thickness. All doors and shutters shall have teak wood lipping on all edges.

5.2.3 Face Panels

5.2.3.1 Door facing on each side of shutter shall consist of three or more veneered plies of commercial ply/teak ply or Sheesham ply as shown on the Drawings

5.2.3.2 Veneer plies shall have total minimum thickness of 3mm before sanding.

5.2.3.3 Door veneers shall be bonded to each other, and to core unit with approved adhesive and machine compressed.

6.0 PROTECTION OF MATERIALS

All materials and assembled units shall be protected from weather and stored in such a way as to prevent decay and attack by fungus and termites.

7.0 WOODEN DOORS

7.1 Materials

7.1.1 First class Deader wood as approved by the Engineer shall be used for the door frames and full/half glazed and panelled shutters.

7.1.2 The ply wood and veneering shall be of selected best quality as approved by the Engineer.

7.1.3 Architrave shall be of Deader wood of specified sizes and fixed as per details shown on Drawings.

7.2 Ground, Blocking & Nailing Strips

Ground, blocking and nailing strips shall be provided as necessary to receive the work included herein and as required for the work of other trades.
Except as otherwise shown or specified, ground blocking and nailing strips shall be secured in place as follows:

7.2.1 **To steel**--- by means of 9.53mm diameter bolts spaced not over 900mm.

7.2.2 **To concrete block**----by the use of cut nails spaced not more than 400mm apart and driven directly into the block.

7.2.3 **To poured concrete**----by means of 6.35mm diamemter galvanized expansion bolts spaced not more than 400mm apart or by any approved method.

7.3 Exterior and Interior Door Frames

All exterior and interior door frames shall be constructed of given thickness nailed in place, jambs and beads shall be housed and nailed and glued together.
The door frames shall be secured in place by means of mild steel anchors screwed in place and built into the masonry as it is being constructed. There shall be one such anchor near the top and bottom of each jamb but not over 900mm intervals between the top and bottom anchors.

7.4 Exterior and Interior Wooden Doors

The exterior and interior wooden door shall, unless otherwise shown or specified, be of the flush, swing, and louvered type as shown on the Drawings or as directed by the Engineer.
Flush door shall comply with BSI 459 Part-2 and shall consist of solid core teak ply veneer 37mm thick shutters as shown on drawings.

7.5 Door Shutters

The shutters will be fixed to the frames with approved quality brass fittings as per hardware schedule.

7.5.1 All doors, shutters shall be fabricated in a workman- manner strictly to the correct sizes and shapes as shown on the Drawings or as directed by the Engineer.

7.5.2 The door shutters shall have solid core as shown on the Drawings. It shall be built in sections, properly jointed and glued together, both sides being covered with commercial ply veneer of the required thickness and approved quality. The surfaces shall surface shall be prepared for painting or polishing.

7.5.3 The arrangements of inner core for solid shutters shall be approved by the Engineer. It shall be so adjusted that circulation of air is free and uninterrupted. Minute holes shall be provided in edges at suitable places to admit and exit air.

7.5.4 Each door shall be constructed so as to permit the installation of hinges, knobs and locks in the position shown on the Drawings.

7.5.5 Completed doors shall be sound, rigid and free from defects and warp. All edges shall have teak wood lipping and shall be aligned and smooth, joints shall be close fitting, hard wood dowelled or mortised framed and of a strength to maintain frame and of strength to maintain the structural properties of the member connected. All adjoining faces and edges shall be flush and smooth. Edges shall be rectangular and solid.

7.6 Fitting, Hanging and trimming

All the doors shall be fitted, hung and trimmed as hereinafter specified and as indicated on the Drawings.

Doors shall have a clearance of 4 mm at sides and top unless otherwise directed by the Engineer and shall have 5 mm clearance at bottom. Doors shall be hung and trimmed with hardware as specified. All the locks shall be installed at the same height and shall be located at height as directed by the Engineer.

7.7 Hardware

Hardware shall be of best quality local make extra heavy duty and first class finished material. The Contractor shall obtain prior approval from the Engineer for quality, shape, pattern, and brand of all the hardware materials by providing samples and catalogues, etc., and shall provide and fix only the approved hardware materials. The fittings shall included but not necessarily be limited to the following:-

Sr. No.	Items	Shutters		Remarks
		Single	Double	
1.	Brass push plate	one	two	225mmx 300mm 18 gauge

2.	Brass Kick plate	two	four	
3.	Mortice lock (Japanese origin)	one	one	Except W C Doors
4.	Brass Tower/Sliding Bolt	one	one	W. C Doors single side only
5.	Brass Hinges	Four	Eight	
6.	Room number Brass (65mm x 65mm)	one	one	Except Toilets.
7.	Door Closer	One	Two	Except W. C Doors.
8.	Door Stoper	One	Two	Except attached Toilets & W.C Doors.

Hardware shall be carefully and securely fitted. Upon handing over the work, hardware shall be demonstrated to operate freely. Keys shall be placed into respective locks and upon acceptance of the work keys shall be tagged and delivered to the Engineer.

7.8 Quality Assurance

7.8.1 Tolerances: Doors shall be fabricated to following tolerances

7.8.1.1 Size: Plus or minus 1.6 mm overall dimensions

7.8.1.2 Maximum Warp: 3 mm

7.8.1.3 Squareness: Maximum diagonal difference 3mm (between length of diagonal measured on face of door from upper right corner to lower left corner and length of diagonal measured from upper left corner to lower right corner).

7.9 Manufacturer's Qualifications:

The manufacturer of doors herein specified shall have been in business of manufacturing doors of type specified for minimum period of five years.The manufacturer/Suppliers/Sub Controctor of Wood Work shall be subject to the approval of the Engineer.

7.10 Submittals

7.10.1 Provide manufacturer's literature completely describing products.

7.10.2 Provide shop drawings showing door types, details and locations, referred to the door type and hardware group shown on door and hardware schedules.

7.10.3 Provide certificates stating that doors were constructed with timber of the species specified having moisture content and meeting equilibrium and relative humidity requirements.

7.10.4 Submit samples of face veneers for selection of colour and pattern.

7.10.5 Procurement of materials shall be made only after the shop drawings and samples have been approved by the Engineer.

7.11 Product Delivery, Storage and Handling

7.11.1 Deliver and store products in waterproof, protective containers with seals unbroken and labels intact until time to use.

7.11.2 Keep products dry, stack products off ground on level platforms, fully protected from weather, including direct sunlight.

7.11.3 Identify type, size and location of each door before delivery in order to permit installation at correct location.

7.12 Installation

7.12.1 Install doors at correct openings and assure smooth swing and proper closer with frames.

7.12.2 Install finish hardware in accordance with manufacturer directions.

8.0 WOODEN RAILING

Material for wooden hand rail system shall be superior quality Teak/Sheesham / Deader Wood as shown on the drawings and specified in the BOQ. It shall be fabricated and installed in accordance with the design shown on the Drawings or as approved by the Engineer. Samples for decorative wood works of hand rail shall be submitted to the Engineer for approval prior to starting the work. Shop drawing for stair case hand rail system shall be submitted to the Engineer for his approval prior to start of work.Hand rail shall be installed to line, level and plumb.

9.0 KITCHEN CABINET

All wooden kitchen cabinet works shall be fabricated by approved sub contractor/manufacturer and shall be of best quality.

9.1 Shop Drawings

The details of these items shown on the drawing are tentative and shows basic configration and design of these items

The contractor shall submit detailed shop drawings of these items on the basis of tentative detail shown on the drawings including all fitting, fixtures and hardware for the proper exeuction of kitchen cabinate for the approval of the Engineer before fabrication..

9.2 Installation

All the works, shall be installed in position by the manufacturer's skilled workmen specialised in the job. Works shall be executed in accordance with approved shop drawings and or as directed by the Engineer.
All work shall be thoroughly protected from damage at all times by suitable methods approved by the Engineer. Adjacent works shall similarly be protected from damage. Any damage or disfigurement shall immediately made good at Contractor's expense.

10.0 WOODEN FLOOR & WALL PANELING

Wooden floor & Wall Paneling works shall be fabricated by approved sub contractor/ manufacturer and shall be of best quality.

10.1 Shop Drawings

The details of these items shown on the drawing or as BOQ are tentative and shows basic configration and design of these items

The contractor shall submit detailed shop drawings of these items on the basis of tentative detail shown on the drawings or as BOQ including all fitting, fixtures and hardware for the proper exeuction of Wooden floor & Wall Paneling for the approval of the Engineer before fabrication..

10.2 Installation

All the works, shall be installed in position by the manufacturer's skilled workmen specialised in the job. Works shall be executed in accordance with approved shop drawings and or as directed by the Engineer.

All work shall be thoroughly protected from damage at all times by suitable methods approved by the Engineer. Adjacent works shall similarly be protected from damage. Any damage or disfigurement shall immediately made good at Contractor's expense.

11.0 DEFECTIVE WORK

In the event of non-conformance to specification and drawings, the wood works shall be rejected by the Engineer and the Contractor shall remove and replace the rejected work by new work of same specifications.

12.0 SURFACE PREPARATION

The surfaces of all wood works shall be prepared in the manner as directed by the Engineer for polishing and painting.

13 MEASUREMENT & PAYMENT

13.1 General

13.1.1 Measurement for payment purposes shall be made against the respective item(s) of works given in the Bill of Quantities which have been completed in-accordance with the Scope of Works specified in this Section.

13.1.2 The item rates quoted by the Contractor shall be deemed to include full compensation of works executed at any floor and at

any height except where otherwise specifically stated in the relevant item of the Bill of Quantities or Contract Documents.

13.1.3 Except otherwise specified herein or elsewhere in the Contract Documents, no measurement and payment will be made for the under mentioned specified works related to the relevant items of the Bills of Quantities. The cost thereof shall be deemed to have been included in the quoted unit rate of the respective items of the Bills of Quantities.

13.1.3.1 Glass, glazing and other materials / accessories required for installation and finishing of carpentry and joinery works, including locks, kick and push plate, architrave, beading, making grooves, handles, door knobs, locking arrangements etc.

13.1.3.2 Primer coat, painting with synthetic enamel paint / lacquer polish in carpentry and joinery works / hand railing.

13.1.3.3 Anti termite treatment to all wood works and adhesives.

13.1.3.4 Timber batten, counter sunk screw for teak wood moulding, skirting, beading & wall panelling.

13.1.3.5 Hardware/Iron mongery for wood works.

13.2 Measurement

Measurement of works against respective item(s) given in the Bill of Quantities, acceptably completed in-conformance with the specifications under this Section, shall be made to the neat lines shown on the drawings and on the basis of No. of Units given in the Bill of Quantities.

13.3 Payment

Payment of acceptably completed works against respective item(s) given in the Bill of Quantities, as measured above, shall be made on the basis of Unit Rate quoted in the Bill of Quantities and shall constitute full compensation for all incidentals / associated works specified in this Section relevant to the item(s).

SECTION 2: MARBLE

1.0 SCOPE

The work done under this section of specifications, consists of providing all material, labour, plant, equipment, appliances and performing all operations required for providing and installing marble natural stone slab and tile finishes in floor, skirting, stair case portion of exterior walls, kitchen and toilet counters, flower beds, and verandahs etc. as shown on the drawings, complete in accordance with this section of the specification and the applicable Drawings.

2.0 SUBMITTALS

2.1 Manufacturer's/Supplier's Product Data

The Contractor shall submit manufacturer's specifications and other product data for each type of marble stone and fixtures required, including instructions for handling, storage, installation and protection.

2.1 Shop Drawings

Shop Drawings shall be submitted showing sizes, dimensions, sections and profiles of slab and tile units, arrangement and provisions for jointing, anchoring, fastening and supports and other necessary fixing details. Indicate locations, layouts and pattern arrangements for each stone type and colour.

2.2 Samples

Submit three sets of range samples not less than 300mmx300mm in size of each type for different colour, grade and finish required include in each set the full range of exposed colour and texture, including material blemishes which may be characteristic of marble selected and to be expected in the complete work.

3.0 DELIVERY, STORAGE AND HANDLING

Materials shall be protected from damage during loading, shipment, delivery and storage. Non-staining materials for blocking and packing shall be used. Stack marble units at site in accordance with manufacturer's recommendations and as required to prevent staining, scratching, etching or breakage. Marble slabs/tiles shall be delivered finished unless otherwise approved. Damaged slabs/tiles with chipped edges or cracking will not be accepted if such defects are noticeable at a distance of one metre under normal light conditions. Decision of rejection shall be final.

4.0 TOLERANCES & TESTING

4.1 Tolerances

Fabricate marble Slab/Tiles in accordance with the followings unless otherwise shown.

• Length and Width	1mm
• Thickness (depth)	1mm where visible6mm (where not visible)
• Horizontal and vertical alignment (deviation from straight lines parallel to centre line)	1mm 3 M of length
• Out of Square (differences in Length of two diagonal measurements)	1mm 3 M

4.2 Testing

The tests for marble shall be made as per B.S. Standards for the determination of:

→ Weight %age Absorption
→ Modulus of Repture
→ Compressive Strength
→ Resistance to Abrasion
→ Flexural Strength

5.0 MATERIALS

5.1 General

5.1.1 Obtain each marble stone type from a single quarries from Pakistan and ensure consistent colour range and texture through out the work. It shall have a specific gravity of about 2.7 and of hardness number on Moh's scale shall range 3 to 4.

5.1.2 Provide marble slabs or tiles of specified sizes in floor, wall areas and countertops as shown on drawings.

5.1.3 Provide marble slabs of type, colour and finish for each area as per approved samples by the Architect/Engineer.

5.1.4 Provide marble of specified thickness. Saw-cut the back surfaces that are meant to be concealed in finished work.

5.1.5 Provide irregular shaped units, staircase units and skirting base units and counter tops to the profiles of required shape, with arises sharp, true and matched at joints, polished exposed edges.

5.2 Beds and Backings

Where applicable, standard cementitious screed and mortar beds and backings, mixed and proportioned by volume shall be as follows:

ordinary Portland Cement	1 part
Sand:	3 parts
Water:	Clean, fresh and free from deleterious substances

5.3 Adhesives, Grouts and Sealants

Proprietary adhesives, joint grouts and sealants of approved type as required and recommended by the manufacturer for specific application shall be used. The colour of the joint grout and the sealants shall match with the colour of stone.

5.4 Setting Shims or Buttons

Lead buttons of the thickness required for the joint size shown or specified, and of the size required to maintain uniform joint width.

5.5 Connection Materials

Provide necessary anchorages loose steel plates, clip angles, seat angles, anchors, dowels, clamps, hangers, and other miscellaneous steel shapes for securing marble units to other supporting and adjacent members. Provide at least two anchors for each piece.

6.0 FABRICATION

6.1 Fabrication Qualification

Fabrication of Marble shall be by a firm which has successfully fabricated marble similar to the quality specified for a period of not less than five years.

6.2 General

Fabricate as shown and as detailed as finial shop drawings. Provide holes and sinkages cut or drilled for anchors, fasteners and supports as shown and as necessary to secure marble in place. Cut and back check as required for proper fit and clearance. Shape beds to fit supports. Provide reinforcing backing as required for adequate strength firmly adhered in place.

6.3 Contiguous Work

Provide chars, reveals, openings and similar spaces and features as required for conuguow works.

Co-ordinate with drawings and final shop drawings showing contiguous work.

6.3.1 Cut openings for lavatories, plumbing fittings and similar items indicated on the drawings, as specified in other drawings and as required.

7.0 EXECUTION

7.1 General

The Contractor shall employ skilled and trained marble workers for doing this job. He may be allowed to employ a specialist Sub-Contractor for this item of work with the approval of the Engineer. The surface over which marble slab/title are required to be fixed shall be clean of all dirt and dust and shall be properly hocked so that the mortar sticks well to the surface.

Do not use marble Slab/Tile with chips, cracks, stains or other defects which might be visible in the finished work. Clean stone before setting by thoroughly scrubbing with fiber brush followed by a through drenching with clear water.

7.2 Paving, Flooring, Skirting and Stair

Apply cement slurry coat over surfaces of concrete substrate immediately prior to placing setting bed. Limit area of application to avoid premature drying out. Install setting bed of required thickness and set stone units before initial set occurs. Apply a thin layer of cement paste to bottom of each unit. Set, tamp and level units immediately. Set units in required pattern with uniform joint widths.

Point joints as soon as possible after initial set. Force grout into joints, strike flush and tool slightly concave.

Remove mortar and grout from surfaces while still moist and as the work progresses.

Do not permit traffic on finished surface during setting and for a minimum of 24 hours after final pointing of joints.

7.2.1 Base

The base in cement concrete if required, the sub base in brick ballast plus sand or lean concrete shall be prepared as provided in "Section Floor and Wall Finishes" cement concrete flooring. The thickness of sub-base if any and base shall be as shown on the drawings or directed by the Engineer. The surface of the concrete base shall be rough finished. The curing period of the base shall be at least 72 hours before laying the marble work.

7.3 Repair and Cleaning

Remove and replace marble units which are broken, chipped, stained or otherwise damaged. Where directed, remove and replace units which do not

match adjoining stonework or are not in line and level as shown on Drawings. Provide new matching units, install and point joints to eliminate evidence of replacement. Repoint defective and unsatisfactory joints to provide neat, uniform appearance.

Clean stonework not less than 6 days after completion of work, using clean water and bristle brushes. Do not use wire brushes, acid or caustic type cleaning agents or other cleaning compounds which may be detrimental to the stone finish or joint grout.

7.4 Finishing and Polishing

The Contractor shall make suitable arrangements for giving final finish to the marble tile work such as cleaning, washing and chemical polishing as specified or as directed by the Engineer.

The marble shall be polish finished to a glossy surface that will reflect light to emphasize the colour and marking, produced by a chemical polish applied to a honed surface. All finished surfaces shall be of uniform texture, colour and appearance and shall be in conformity with the sample approved by the Engineer.

7.5 Protection

Provide covers, boards, supports and all other necessary materials to protect finished work from collapse, deterioration, discolouration or damage during installation and until contract completion.

8.0 MEASUREMENT AND PAYMENT

8.1 General

8.1.1 Measurement for payment purposes shall be made against the respective item(s) of works given in the Bill of Quantities which have been completed in-accordance with the Scope of Works specified in this Section.

8.1.2 The item rates quoted by the Contractor shall be deemed to include full compensation of works executed at any floor and at any height except where otherwise specifically stated in the relevant item of the Bill of Quantities or Contract Documents.

8.1.3 Except otherwise specified herein or elsewhere in the Contract Documents, no measurement and payment will be made for the under mentioned specified works related to the relevant items of the Bills of Quantities. The cost thereof shall be deemed to have been included in the quoted unit rate of the respective items of the Bills of Quantities.

8.1.3.1 Finishing, washing, polishing, repair cleaning and protection of marble slab, tiles, in position.

8.1.3.2 Appropriate adhesives, joint grouts and sealants for fixing marble tiles, where specified on the Drawings or directed by the Engineer.

8.1.3.3 Bedding mortar for marble stone/tiles.

8.1.3.4 Preparation of concrete substrate for laying marble tiles on floor.

8.1.3.5 M.s. angle framing and fixing accessories for marble slab on vanity counter if required

8.1.3.6 Cost of factory chemical polish for pre polished marble tile/ slab.

8.2 Measurement

Measurement of works against respective item(s) given in the Bill of Quantities, acceptably completed in-conformance with the specifications under this Section, shall be made to the neat lines shown on the drawings and on the basis of No. of Units given in the Bill of Quantities.

8.3 Payment

Payment of acceptably completed works against respective item(s) given in the Bill of Quantities, as measured above, shall be made on the basis of Unit Rate quoted in the Bill of Quantities and shall constitute full compensation for all incidentals / associated works specified in this Section relevant to the item(s).

SECTION 3: FLOOR AND WALL FINISHES

1.0 SCOPE

The work under this section of the Specification consists of furnishing all plant, labour, equipment, appliances and materials and performing all operations in any floor and at any height in connection with the installation of cement concrete floors and floor finishes including bases, skirting and external surface treatments, complete in strict accordance with this section of the specifications and the applicable drawings and subject to the terms and conditions of the Contract.

2.0 APPLICABLE STANDARDS

Latest editions of following Pakistan, ISO, British & ASTM standards are relevant to these specifications wherever applicable.

Pakistan Standard

232 Ordinary Portland Cement

511 Terrazzo tiles

531 Cement Concrete Floor Tiles

ISO (International Organization for Standardization

R 680 Chemical analysis of cements Main constituents of Portland Cement.

R 681 Chemical analysis of cements Minor constituents of Portland cement.

ASTM (American Society for Testing and Materials)

C 482 Bond strength of ceramic tile to Portland cement.

C 648 Breaking strength of ceramic tile.

C 650 Resistance of ceramic tile to chemical substances.

C 798 Colour permanency of glazed ceramic tile.

D 2859 Flammability of finished materials vinyl-asbestos tile or flooring.

D 3564 Application of floor polishes to maintain vinyl- asbestos tile or flooring.

E 84 Surface burning characteristics of building materials

F 141 Resilient floor coverings, definitions of terms.

F 510 Resistance to abrasion of resilient floor coverings.

BSI (British Standards Institutions)

882 Pt.2 Course and fine aggregates from natural sources.

1199 Sands for external renderings, internal plastering with lime and Portland cement and floor screeds.

1201Pt.2 Aggregates for granulithic concrete floor finishes.

1281 Glazed ceramic tiles and tile fittings for internal walls.

1286	Clay tiles for flooring
3260	PVC (vinyl) asbestos floor tiles.
3261	Unpacked flexible PVC flooring.
5385	Internal Ceramic wall tilling and mosaics in normal conditions.
5442	Classification of adhesives for use in Construction pt-1 Adhesives for use.
203	Sheet and Tile flooring
204	In-situ Floor Finishes.
209 Pt.1	Care and Maintenance of floor surface, wooden flooring.

3.0 SUBMITTALS

Contractor shall submit at least 3 range samples of all the items/each type of stone/tile to be provided under this section showing colour, grade, finishing and texture to the Engineer for approval. Contractor shall provide samples from each specified manufacturer and in sufficient variation for each type of item. The Engineer shall make his selection only when all related samples have been submitted and he is satisfied that the samples submitted are the maximum range available against any item.

4.0 MATERIAL

4.1 Cement

Cement shall be ordinary Portland cement conforming to B.S. 12 or PS 232.

4.2 Sand

All fine sand shall be obtained from sources approved by the Engineer. The grading shall conform to B.S 882 Grading Zone 1 and 2 of which the gradation limits are as follows:

Percentage (by weight) passing

B.S. Sieve	Grading Zone 1	Grading Zone 2
3/8" (9.53 mm)	100	100
3/16" (4.765 mm)	90-100	90-100
No. 7	60-95	75-100
No. 14	30-70	55-90
No. 25	15-34	35-59
No. 52	5-20	8-30
No. 100	0-10	0-10

4.3 Coarse Aggregate

Coarse aggregate shall be crushed or uncrushed gravel or crushed stone, angular or rounded in shape and shall have granular, crystalline or smooth surface free

from friable, flaky and laminated pieces, mica and shale. It shall not contain matters injurious to concrete. All coarse aggregate shall conform to BSS NO.882 and shall be graded as follows:

B.S. Sieve	% Passing by weight
1" (25.40 mm)	100
3/4" (19.05 mm)	90-100
3/8" (9.53 mm)	20-55
3/16"(4.765 mm)	0-10

The aggregate shall be stored on properly constructed paving or as directed by the Engineer.

There shall be a physical partition between the stockpiles of coarse and fine aggregate. If required, aggregates shall be washed and screened to the satisfaction of the Engineer. Sieve analysis of all the aggregates to be used in the works shall be carried out as and when required by the Engineer. All aggregate shall be subject to the approval of the Engineer.

Any aggregates not found to be of the specified/approved standard shall be rejected by the Engineer and all such rejected material shall be removed from site without delay.

Floors sub-base or base constructed with rejected aggregates shall be dismantled and rebuilt at the expense of the Contractor.

4.4 Brick Ballast

Brick Ballast as Sub base of floors shall be obtained from well burnt or over burnt bricks which are hard, durable and strong. Brick ballast shall be free from impurities, quarry sap, dust, dirt and solubility characteristics

The brick ballast shall be of specified gradation and which shall laid in position with excessive ramming, watering unless required thickness is achieved.

4.5 Water

Water used for mixing concrete, curing or any other operation of the works specified herein shall be fresh, clean and free from organic or inorganic matters in solutions or in suspension. Only water of the approved quality shall be used for all constructional purposes:

4.6 Cleaning Compound

The compound used for all cleaning of terrazzo shall be an approved neutral chemical cleaner free from acid and alkali or any other material that will affect the colour or otherwise damage the terrazzo and shall not affect the conductivity of terrazzo floors.

4.7 Division Strips

Division strips shall be of marble as approved by the Engineer. Standard division strips for floor finishes shall be not less than 5mm (3/16") in thickness and shall not be less than 1-3/4" in depth.

4.8 Marble Chips

Marble chips shall have an abrasive hardness of not less than 16, as determined by the test of wear resistance in National Bureau of Standards Reports MBS 98. Size shall vary from No. 0 to 8.

4.9 Preservative Material

Preservative treatment for terrazzo floor shall produce a water-proof finish which will not be impaired by immersion in water at room temperature for a period of 2-1/2 hours, approximately 18 hours after the floor is finished by buffing, as specified. The preservative material shall not discolour the terrazzo nor leave a tacky or sticky finished film on the surface after buffing.

4.10 Vinyl Tiles

4.10.1 PVC Tiles (Static): PVC tiles / sheet of requisite thickness shall be of best quality available in the Country. Size, colour, shade and adhesive shall be as per the sample which shall be submitted by the Contractor and approved by the Engineer.

4.10.2 PVC Tiles (Anti-static): PVC tiles / sheet of requisite thickness shall be of best quality available in the Country Size, colour, shade, import quality copper strips and conductive adhesive shall be as per the sample which shall be submitted by the Contractor and approved by the Engineer.

Following shall be the technical requirements;

- For new floors between two dry contact electrodes no individual reading shall be greater than $5 \times 10^6\ \Omega$ than $2 \times 10^4\ \Omega$. The average of all readings shall remain between $2 \times 10^6\ \Omega$ and $5 \times 10^4\ \Omega$

- For existing floors between two dry contact electrodes no individual reading shall be greater than $5 \times 10^7 \Omega$. The average of all readings shall be $2 \times 10^7 \Omega$.

4.11 Terrazzo Tiles

Terrazzo tiles shall be first grade, mechanically compressed type conforming to PS-531. Tiles shall be 12" x 12"and shall be 1" in thickness (minimum) with a minimum terrazzo topping of ½" thickness composed of 1:2 cement marble chips of approved size and colour over ½" thick substrate of 1:3 cement sand mortar.

4.12 Ceramic Tiles / Pre-Polished Porcelain Tiles

Ceramic tiles shall be local, premium quality, plain white/coloured or printed from one of the approved manufacturer. The tiles shall be of sizes as specified on the drawings and shall conform to BS 1281 as per samples. Pre-polished porcelain tiles shall be best quality, plain coloured/textured from one of the approved manufacturer of sizes as specified on the drawings

4.13 Cement Concrete Tile/ Interlocking Pavers

Cement Concrete tiles/ Interlocking Pavers (minimum 7000 psi) shall be of approved shade, shape and size, checkered, mechanically vibrated and compressed type conforming to PS-531, as shown on the drawings and approved by the Engineer. Manufacturer of concrete tiles and pavers shall be subject to the approval of the Engineer.

4.14 Granite Slab/Tiles

All Granite stone types are to be selected and approved by the Engineer for quality, colour and texture. All approved granite for tile work shall be obtained from a single quarry and the Contractor shall ensure consistency in colour range and texture throughout the work. All granite tiles to be installed/ laid shall be factory polished.

4.15 Acrylic Resin Coating (Graffiato)

Acrylic based Resin Coating (Graffiato) on surfaces (straight or swirl) shall be of approved shade, colour, texture and size. Manufacturer of Acrylic Resin Coating shall be subject to the approval of the Engineer.

4.16 Stucco Work

It shall be cement based rendering over plaster work and which shall be prepared by mixing white cement with marble powder and marble chips in ratio and sizes as per the direction of the Engineer. Subsequently this surface rendering shall be cut/ chiseled and painted to the desired grades and texture shown in the drawings.

5.0 EXECUTION

5.1 Cement Concrete Flooring

The materials for C.C flooring shall be same as already specified under clause 3, "Materials".

5.1.1 Composition of Concrete

Concrete shall be composed of Portland cement, sand, coarse, aggregate and water, all well mixed and brought to the proper consistency. The Contractor shall mix the ingredients as indicated on the Drawings. The

proportions of the various ingredients shall be determined from time to time during the progress of the work and tests shall be made of samples of the aggregates and the resulting concrete. The mix proportions and appropriate water-cement ratio will be determined on the basis of the production of concrete having required workability, density, impermeability, durability and required strength.

5.1.2 Mixing Concrete

The concrete ingredients shall be mixed in a batch mixer for not less than 1-1/2 minutes after all ingredients, except the full amount of water, are in the mixer. The Engineer reserves the right to increase the mixing time when the charging and mixing operations fail to produce a concrete batch in which the ingredients are uniformly distributed and the consistency is not uniform. The concrete shall be uniform in composition and consistency from batch to batch except when changes in composition or consistency are required. Water shall be added prior to, during and following the mixer charge. Excessive over-mixing requiring addition of water to preserve the required concrete consistency will not be permitted. The concrete ingredients shall be mixed by volumetric measurement in purpose made boxes approved by the Engineer.

5.1.3 Construction

The base course of the floor shall comprise of stone ballast of 2 inches (approx: 50 mm) mesh size. The base course shall be thoroughly compacted by suitable power rammers to the total consolidated thickness as shown on the Drawings and as approved by the Engineer. The interstices shall be filled with smaller size stones. The base course shall be blinded with sand and the whole surface watered. Over the well-compacted base course, a layer of concrete of the required grade and thickness shall be laid, in panels of the sizes as indicated on the Drawing and as approved by the Engineer.

After the C.C bed has been cured, as directed by the Engineer, it shall be roughened and well watered before floor finishing is laid. The floor finish shall comprise of cement concrete of required grade and shall be laid in panels to the required thickness as shown on the Drawings or as directed by the Engineer. The concrete after laying will be thoroughly rammed and mortar worked up to the top and smoothed with a steel trowel. The edge of each section into which the floor is divided should be defined by wooden screeds of the approved width and of a depth equal to the depth of the floor concrete.

Freshly placed concrete floor and completed floor portions as finished shall be protected to prevent loss of water by covering with damp hessian, water proof paper, damp sand or other approved material, and shall be kept constantly damp for a period of four days or longer after concreting as directed by the Engineer. The concrete shall be allowed to dry out slowly over a period of three days after wet curing is completed.

The expansion joints shall be filled in with hot bitumen, of the approved grade, as directed by the engineer.

5.2 Terrazzo Flooring

5.2.1 Mix

The terrazzo mixes shall be composed by weight as follows:

Plain terrazzo for all floors and bases indicated as terrazzo and not otherwise specified, shall be composed of one part cement, white or grey, and 2 parts of marble chips of the sizes and colours hereinafter specified.

5.2.2 Preparation for Terrazzo

The grade and thickness of concrete as shown on the Drawings shall be laid as under bed to receive terrazzo. The surface of the bed shall be roughened for bounding with the terrazzo finish. If the surface is too smooth it shall be roughened with a toothed chisel and, prior to laying the terrazzo the bed shall be cleaned of all dirt, oil grease and extra loose material.

5.2.3 Division Strips

Terrazzo floors and bases shall be divided up by marble strips of specified thickness and depth. The division strips between field work and borders shall have exposed tops in full width of the strips. The division strips shall be set immediately after the spreading of the under bed, the strips being partially embedded therein, securely anchored to the sub-floor and grouted solid.

All division strips shall be set, straight to lines and to the proper level to ensure that the tops of the strips will show uniformly after grinding and smoothening operations are completed and joints and intersections shall be fitted tight. Strips shall be braced to prevent bulging during the placing of terrazzo.

Unless otherwise shown on the drawings, the divisions in field work of large areas shall not exceed 4 feet x 4 feet and in small areas shall not exceed 2 feet x 2 feet.

Edging strips shall be placed at door ways between terrazzo and other types of flooring and along the edges of all terrazzo bases or borders and adjoining other types of floor finishes or floor covering. The edging strips at doorways shall be placed in line with the step face of doors. All edging strips shall be anchored and grouted solid in the under bed or to the concrete sub-floor and braced to prevent bulging as specified for division strip.

5.2.4 Laying Terrazzo

The sub-surface shall be swept clean, thoroughly moistened, but not saturated, and slushed with a coating of neat cement grout approximately 1/8" in thickness. The under bed consisting of class 'C' cement concrete screed shall be spread and brought to a level not less than 3/4" below the finished floor level. The dividing strips shall be installed in the green under bed. The terrazzo mix shall be spread, tamped and rolled into a compact mass not less than 3/4" thick. After rolling, additional aggregate mix shall be sprinkled over the surface to fill up all depressions, to take up excess moisture and to permit the terrazzo to be trowelled to a level, dense and even surface, slightly above the finish line of floor. This level, shall allow for the surface grinding necessary to expose the specified area of aggregate, and to produce smooth, level floors free of waves and depressions.

5.2.5 Seasoning

The completed terrazzo shall be allowed to season for 6 days during which time it shall be kept moist by (1) covering with approximately 1" thickness of sand; or (2) covering with building paper or mats; or (3) sprinkling with water at every 10 hour interval.

5.2.6 Surface

Following the curing period, the terrazzo shall be machine ground to a true, even surface using a No. 24 grit followed by a No. 80 grit or finer abrasive stone. After the first grinding, the floors shall be thoroughly grouted with the same cement and colour composition as specified for the matrix of the terrazzo mix. The grout shall be of the consistency of thick cream, and shall be brushed over the floor to eliminate all pits and thoroughly fill the surface for final grinding.

5.2.7 Finishing

Not less than 72 hours after application, the grouting coat shall be removed by grinding. In the later stages of grinding, the grit stones or other abrasive used in the grinding machine shall be of a grain or fineness that will give the surface smooth finish. Small areas, inaccessible portions and corners which cannot be reached by the grinding machine shall be ground and rubbed by hand.

5.2.8 Protection

The walls and all surfaces of the finished work of other trades shall be properly protected from damage and spoiling during the process of grinding and washing of the terrazzo. After the finish grinding has been completed and the surface treatment applied, the terrazzo work shall be covered and protected with material approved by the Engineer until completion of the work of all other trades.

5.2.9 Cleaning and Coating

Prior to placing the protective covering, the terrazzo floor shall be approved by the Engineer. After the work of all other trades has been completed and the protective covering removed, all terrazzo work shall be washed with cleaning compound, mixed with warm water and using a fine abrasive where necessary to remove any stains or cement smears. The terrazzo shall be allowed to dry thoroughly and shall be given a sealing application of preservative material. The sealing material shall be applied in accordance with the manufacturer's directions, leaving all terrazzo work in clean condition as approved by the Engineer.

5.2.10 Dado/Skirting

The ingredients of dado/skirting shall be one part of cement and two parts of marble chips varying from Nos. zero to 2. Striking shall be laid over a base of plaster of specified thickness. The thickness of dado/skirting layer shall be as specified. The surface shall be grinded and polished to the satisfaction of the Engineer.

5.3 Installation of Tile Flooring

When setting out the tiles, care shall be taken to establish the correct elevation for the floor. A gauge rod shall be used, indicating the overall measurement of a given number of tiles with specified joint width to reduce cutting.

After the floor has been machine finished, it should be covered with white, non-staining sand or rags to protect it while other work is being done. After removal, the floor shall be thoroughly scrubbed.

5.3.1 General

The base shall be prepared by laying cement concrete of specified grade and of thickness as shown on the drawings, or specified in the Bill of Quantities.

The curing period of the setting bed shall be as directed by the Engineer. As large an area of setting bed shall be spread at one time as can be covered with tiles before the mortar has set. Surplus mortar shall be removed. The thickness of setting bed in any space shall not be less than 1/2".

Floor and wall surfaces to receive the tiles shall be thoroughly cleaned of all dirt, dust, oil and other objectionable matters. Tiles shall be laid out from the centre line of each space in an outward direction and the pattern should be made symmetrical with a minimum number of cut tiles as directed by the engineer.

Joints between the tiles shall be of uniform width. Tiles shall be cut with a suitable cutting tool and rough edges shall be rubbed smooth. Tiles shall be laid to the straight edges.

5.3.2 Ceramic Tiles/Porcelain Tiles

The ceramic tiles/porcelain tiles shall be laid to the required lines, levels and grades over a setting bed of cement sand mortar comprising of 1-part of cement and 2-parts of sand by volume and the joints filled with neat white/pigmented cement including vertical and horizontal covers. The tile floor shall be kept wet for at least 72 hours and no traffic should be allowed on the tiles during curing period.

5.3.3 Cement Concrete Tiles

The cement concrete tiles shall be laid to the required lines, levels and grades over a setting bed of cement sand mortar.

The sides shall be buttered with cement mortar and adjacent tiles laid in the same manner in the required pattern, with a thin joint in proper level and line. The joints shall then be thoroughly cleaned with wire brush and pointed with neat cement of the same colour as the tile.

Care shall be taken to see that full tiles are used as far as possible. Where this is not possible, the edge tiles shall be neatly cut with an electric saw and the edges rubbed smooth. In case of patterned tiles, the tiles shall be laid in such a way that the pattern ends symmetrically on two sides.

Cement concrete tiles shall be cured for 7 days with water and then thoroughly cleaned and dried. Notwithstanding anything written above, the manufacturer's printed instructions regarding laying shall be strictly followed.

5.3.4 Concrete Interlocking Pavers

Concrete Interlocking pavers shall be laid in-accordance with the instructions of the manufacturer over a cushion of sand. The pavers will be laid as per the instructions of the Engineer.

5.3.5 Terrazzo Tiles Flooring

Apply cement slurry coat over surfaces of concrete substrate immediately prior to placing setting bed which shall comprise cement sand mortar 1:2 and shall be 1” thick and shall be spread uniformly. Limit area of application to avoid premature drying out. Set tiles before initial set occurs. Apply a thin layer of cement paste to bottom of each unit. Set tamp and level units immediately so that cement mortar slurry rises up in the joint. Set units in required pattern as specified and as per the instructions of the Engineer with uniform joint widths. The levels and lines shall be checked with very fine twine and the defects removed immediately. After the tiles have initially set, the joints shall be raked out

and coloured cement of required shade shall be spread in the form of slurry to fill all joints. Force grout into joints, strike flush and tool slightly concave. Remove mortar and grout from surfaces while still moist and as the work progresses. The surface after drying (minimum of seven days) shall be machine grinded to a true even surface using various grades of abrasive stones as required and directed by the Engineer. After the first grinding the floor shall be grouted with the same colour composition as used for its manufacture, to a consistency of thick cream and shall be brushed over the floor to fill in the joints and after 72 hours the grouting coat shall be removed by grinding till a smooth and even surface is obtained. .and chemically polished.

The tiles shall be cut wherever required with a suitable cutting tool and rough edges shall be rubbed smooth. The finished surface shall not show any depressions in individual tiles or any undulations in the floor.

Do not permit traffic on finished surface for a minimum of 72 hours.

5.3.6 PVC Tiles

The base shall be prepared as per thickness shown on drawings keeping the margin of tile thickness. After the base is cured, any irregularities found on the base shall be filled in and leveled before the application of tiles. Surface to receive tiles shall be thoroughly cleaned of all dirt, dust, oil and other objectionable matter. Approved manufacturer's recommended adhesive shall be applied as per specifications and in quantities recommended by him. Tiles shall be laid starting from one side of the room or as per the instructions of the Engineer and shall be so pressed that complete adhesion takes place.

Tiles shall be cut where required with suitable cutting tool and rough edges shall be rubbed smooth. Tiles shall be laid to straight edges as per approved pattern.

5.3.7 PVC Tiles (Anti static)

5.3.7.1 Preparation of Base

The base shall be prepared as per thickness shown on drawings keeping the margin of tile thickness and network of Copper Strips. After the base is cured, any irregularities found on the base shall be filled in and leveled before the application of tiles. Surface to receive tiles shall be thoroughly cleaned-off all dirt, dust, oil and other objectionable matter. Approved manufacturer's recommended adhesive shall be applied as per specifications and in quantities recommended by him. Tiles shall be laid starting from one side of the room or as per the instructions of the Engineer and shall be so pressed that complete adhesion is ensured. Tiles shall be cut where required with

suitable cutting tool and rough edges shall be rubbed smooth. Tiles shall be laid to straight edges as per approved pattern.

5.3.7.2 Fitting the Copper Mesh

Lay the full lengths of copper strips across the room on both sides cutting each other. Each strip must be at a distance of 12" from each other and 24" from the other. The joints of these sheets must be properly acid welded. Keep as many points of the copper strip as you require out from the ends for earthing purpose. Similarly the whole copper grid must be properly earthed. To do so one part of this grid shall be attached to the earthing point of the room. The non-static tiles shall then be laid on the floor. This grid shall only be necessary for assuring the continuity. The strip shall pass beneath of the tile to give proper resistance.

5.3.7.3 Fixing PVC Floor Tiles (Anti-Static)

- Mark out the room area with chalk lines across length and width, positioned to allow for reasonably sized tile cuts on all sides.

- The new trowel blade enclosed with the adhesive shall be fitted when starting the pack and used for spreading one pack only.

- Stir the adhesive before use.

- Spread the adhesive evenly holding the blade at an angle of about 60 degrees.

- Good transfer is essential; the area spread with adhesive at any time shall be limited to ensure that all the tiles and cuts can be laid while the adhesive is still wet. Commence tiles laying at the point first spread so that the adhesive has been left open for approximately 15 minutes. The actual area spread and the open time shall depend on the absorbency of the sub-floor and ambient conditions. Do not spread more than one pack at a time.

- Ensure electrical conductivity by overlapping adjacent areas of adhesive application.

- Put tiles closely and press them firmly to the floor to give good contact over the whole tile area.

- Approximately 1-hour after laying the tiles apply suitable pressure on them to ensure overall good contact. Care shall be taken that adhesive shall not squeeze up between the tiles,

and if it happens then immediate cleaning of it shall be necessary.

- Dried adhesive residue shall be removed with a slightly abrasive cloth.

5.3.7.4 Traffic

Foot traffic shall only be allowed after 24 hours after completing tile fixing and heavy traffic shall be allowed after 2-days (e.g. mobile operating tables)

5.3.7.5 Testing

Electrical testing shall be carried out until at least 21-hours after completing the installation. The method shall be as laid down or as specified. The following summarizes the procedure recommended in NHS technical memorandum No. 2 (1977).

5.3.7.6 Equipment:

An insulation testing ohm meter having an approximate open circuit voltage of 500 volts DC and capable of measuring resistance values of between 10^4 and $5 \times 10^7 \Omega$

5.3.7.7 Method

The finished surface of concrete screed as floor base shall be washed thoroughly and then be allowed to dry (no test shall be carried out within 2-hours of floor being wetted) with subsequent wiping over it with a dry cloth. Place the electrodes approximately 12" apart and measure the resistance between them. In order to check the actual resistance the black bottom layer shall have to be checked, to do this either puncture a tiny hole on the surface of the tile or check the resistance from the left out copper strips on the ends of the floor.

5.4 Washed Terrazzo

5.4.1 Mix

The terrazzo mixes shall be composed by weight as follows:

Terrazzo for all surfaces indicated as Wash Terrazzo and not otherwise specified, shall be composed of one part white cement and 2 parts of marble chips of the sizes and colour as approved by the Engineer with admixtures of approved imported pigments to achieve the desired colour and shade.

5.4.2 Preparation for Terrazzo

The grade and thickness of 1:2 cement sand plaster as shown on the Drawings shall be laid as base to receive terrazzo. The surface of the base shall be roughened for bonding with the terrazzo finish. If the surface is too smooth it shall be roughened with a toothed chisel and, prior to laying the terrazzo the base shall be cleaned of all dirt, oil grease and extra loose material.

5.4.3 Division Strips

Terrazzo shall be divided by aluminum U and Y channels. The division strips shall be set immediately after the application of base plaster, the strips being grouted solid to the base plaster.

All division strips shall be set, straight to lines and to the proper level to ensure that the tops of the strips will show uniformly after washing operations are completed and joints and intersections shall be fitted tight.

Edging strips or aluminum Y sections shall be placed along the edges of all corners. All edging strips shall be grouted solid in the base plaster.

5.4.4 Laying Terrazzo Topping

The sub-surface shall be swept clean, thoroughly moistened, but not saturated, and applied with a coating of neat cement slurry. The terrazzo mixed shall be spread to a thickness as specified on the drawings, and trowelled to a level, dense and even surface.

5.4.5 Finishing

Before the terrazzo topping is hardened the exposed surface shall be brushed down, plenty of water being used in this process. The brushing shall continue till the matrix is removed and each piece of the marble stone is clearly exposed to the desired level as approved by the Engineer. After whole of the area is evenly exposed the surface shall be sprayed with water and lightly brushed down cleaning away all the adhering mortar and revealing the true colour of the marble pieces.

5.4.6 Protection

The wall and all surfaces of the finished work of other trades shall be properly protected from damage and spoiling during the process of washing.

5.4.7 Cleaning and Coating

All cement bloom left on the exposed surface shall be removed and cleaned with a weak solution of commercial hydrochloric acid.

5.5 Granite Slab/Tiles

Granite Slab/Tiles on floor and wall shall be executed in accordance with CP.298 and the approved shop Drawings and as per direction of the Engineer.

The granite stone of the specified size shall be fixed using brass dowels, brackets, expansion bolt anchors and plugs or with approved adhesive and ¾" thick cement sand reinforced plaster in 1:3 with 22 SWG for wall cladding only. The dowels, anchors or ties must not be subjected to any loading until complete hardness has taken place. Holes and mortises shall be carefully drilled or cut to avoid fracture of the tile. Patching will not be permitted and any damaged tiles shall be removed and replaced at the cost of the Contractor.

External claddings shall be designed by means of proper structural design calculation. The structural design shall take account of the suitability of both the cladding units and the fixing dowels, anchors and each cladding unit shall be fixed with at least two brass dowels. Static proof shall be provided by the Contractor for the spacing and number of fixings to be used.

5.5.1 Repair and Cleaning

Remove and replace stone units which are broken, chipped, stained or otherwise damaged. Where directed remove and replace units which do not match adjoining stonework or is not in line and levels as shown on Drawings. Provide new matching units, install and point joints to eliminate evidence of replacement. Re-point defective and unsatisfactory joints to provide neat, uniform appearance.

Clean stonework not less than 6 days after completion of work, using clean water and bristle brushes. Do not use wire brushes, acid or caustic type cleaning agents or other cleaning compounds which may be detrimental to the stone finish or joint grout.

5.5.2 Protection

Provide covers, boards, supports and all other necessary materials to protect finished work from collapse, deterioration, discolouration or damage during installation and until contract completion.

5.6 Acrylic Resin Coatings (Graffiato / Sandtex)

Acrylic based resin coating (Graffiato / Sandtex) on surfaces (straight or swirl) shall be laid in-accordance with the instructions of the Manufacturer over ½" thick cement sand plaster. This shall be laid as per the instructions of the Engineer.

6.0 MEASUREMENT AND PAYMENT

6.1 General

6.1.1 Measurement for payment purposes shall be made against the respective item(s) of works given in the Bill of Quantities which have been completed in-accordance with the Scope of Works specified in this Section.

6.1.2 The item rates quoted by the Contractor shall be deemed to include full compensation of works executed at any floor and at any height except where otherwise specifically stated in the relevant item of the Bill of Quantities or Contract Documents.

6.1.3 Except otherwise specified herein or elsewhere in the Contract Documents, no measurement and payment will be made for the under mentioned specified works related to the relevant items of the Bills of Quantities. The cost thereof shall be deemed to have been included in the quoted unit rate of the respective items of the Bills of Quantities.

6.1.3.1 Loss and wastage of material due to consolidation, erosion and settlement.

6.1.3.2 All type of joints (expansion, contraction and construction joint etc.).

6.1.3.3 Cement concrete screed base of specified ratio/ strength & class and cement sand bedding mortar under terrazzo tiles/ brick on edge floor and skirting/ dado etc.

6.1.3.4 Finishing/grinding, washing & polishing works of ceramic, concrete, terrazzo tile, terrazzo floors and marble tiles.

6.1.3.5 Marble strips in terrazzo floors

6.1.3.6 1:2 and 1:4 cement sand rough cast plaster.

6.1.3.7 Sand cushion under concrete interlocking pavers

6.1.3.8 Adhesives used in the laying of PVC flooring and Granite etc.

6.1.3.9 1:3 reinforced cement sand plaster with 22 SWG under Granite for wall cladding.

6.2 Measurement

Measurement of works against respective item(s) given in the Bill of Quantities, acceptably completed in-conformance with the specifications

under this Section, shall be made to the neat lines shown on the drawings and on the basis of No. of Units given in the Bill of Quantities.

6.3 Payment

Payment of acceptably completed works against respective item(s) given in the Bill of Quantities, as measured above, shall be made on the basis of Unit Rate quoted in the Bill of Quantities and shall constitute full compensation for all incidentals / associated works specified in this Section relevant to the item(s).

SECTION – 4: LOW VOLTAGE (LV) DISTRIBUTION BOARDS

1.0 SCOPE OF WORK

The work under this section consists of design, manufacturing, fabricating, supplying, installing, connecting, testing, and commissioning of all material and services of the complete Low Voltage Distribution Boards as specified herein, shown on the Tender Drawings and stated in the Bill of Quantities.

The Contractor shall discuss the electrical layout with the Engineer and co-ordinate at site with other services for exact position of the electrical lines and equipment.

The Low Voltage Distribution Boards shall also comply with the General specifications for Electrical & Communications Works Section-8001 and with other relevant provisions of the Tender Documents.

2.0 GENERAL

The Low Voltage Distribution Boards shall be sheet steel fabricated. These shall be suitable for surface mounting, semi-recessed or recessed in wall mounting. The Low Voltage Distribution Boards shall be totally enclosed, dust and damp proof. The Low Voltage Distribution Boards shall be complete in all respects with material and accessories, factory assembled, tested and finished according to the Specifications and to the normal requirements.

All components shall be installed on a common mounting plate inside the enclosure and protected from the front with screwed sheet steel front plate. The enclosure shall be provided with rubber gasketting and a lockable hinged door with cam fastener.

The distribution board shall be supplied complete with all installation materials as recommended by the manufacturer. The incoming and outgoing cable connections shall be according to the wiring requirements. If required, an adapter box for accommodating the cables and conduits may be provided. The box shall be of the same material and finish as the distribution board.

The cabling inside the distribution board shall be suitably harnessed by means of straps or cords. An earth bar or terminal strips shall be provided for connection of incoming and outgoing earth conductors. The earth bar or terminals shall be permanently connected to the body of distribution board at two points.

The LV Distribution Boards, in general, shall;

- be suitable for indoor installation & operation

- be suitable for operation and maintenance from front side

- be suitable for both 415 Volt AC, three phase 4 wire and 230Volt AC, single phase 2 wire, 50 Hz system

- have all components rated for insulation class of 500V minimum for three phase and 250 Volt for single system

- be designed for flush mounting of all instruments on the front

- be provided with adequate clearance from live parts so flash overs can not be caused by switching, vermins, pests, etc.

- have incoming/outgoing cable termination arrangements. The power cables shall be directly connected to the terminals of TP 500V MCCBs of current ratings of 100 Amps and above. The SP/ TP MCBs and/ or MCCBs of current ratings upto and including 100 Amps shall be connected to DIN rail mounted wiring terminals of appropriate ratings, numbers and sizes for the outgoing wiring cables

- be provided with name plate on the front side of door

- be provided with pocket inside of door for safe keeping of the detailed as-built wiring/ shop diagrams of the switch board

- have provisions for incoming and outgoing cables entry, connections and termination arrangements from top and/ or bottom plates as per site requirements

- have all openable doors grounded with the use of flexible copper cable/strip of at least 10mm^2 cross-sectional area

3.0 APPLICABLE STANDARDS/CODES

The latest editions of the following standards and codes shall be applicable for the materials specified within the scope of this Section :

BS 4752-1	-	Triple Moulded Case Circuit Breaker
IEC 947	-	Single and Triple Miniature Circuit Breaker
IEC 947	-	Low Voltage Switch gear and Control gear
IEC 439	-	Factory Built Assemblies of LV Switch gear
IEC 4752	-	Switch gear and control gear for Voltages upto & including 1 kV
BS 88	-	HRC Fuses
IEC 73	-	Colors for indicator lights and push buttons

IEC 446 - Identification of insulated/bare conductors

4.0 MATERIAL

4.1 Sheet Metal Work

The Surface mounting Low Voltage Distribution Board shall be fabricated with 14 SWG sheet steel and the semi-recessed or recessed mounting type shall be fabricated with 16 SWG sheet steel.

The complete sheet steel metal work of the Low Voltage distribution board shall be:

- cleaned down to bare shining metal
- de-rusted and de-greased
- painted with two base coats of anti-corrosive RED oxide paint
- Two coats of weather proof powder paint in approved colour

4.2 Components

The Low Tension Distribution Board shall be provided with components as specified in the specifications, mentioned in the Bill of Quantities, as shown on the Tender Drawings required for the satisfactory operation of the distribution board and of the electrical system.

Typical component specifications are given below:

4.2.1 Bus Bars

The bus bars shall be made of high conductivity electrolytic copper and shall be completely isolated and mechanically braced for the specified fault level. The phase identification of bus bars shall be by colours applied on bus bars and these shall be red, yellow and blue for phase and white for neutral. The earth bus bar shall be green.

The bus bars shall be triple pole and neutral and shall be of appropriate size to meet the electrical and mechanical requirements of the system. The temperature rise shall not exceed 45 degrees centigrade at rated current.

4.2.2 Moulded Case Circuit Breaker (MCCB)

The MCCB shall be moulded case, triple pole, rated for 500 Volt AC. The Operating current ratings and Rupturing capacities shall be as mentioned in the relevant items of the Bill of Quantities and as shown on the drawings. The MCCB's shall have fixed Magnetic Short circuit and fixed Thermal Overload protections. However, the short circuit breaking capacities of triple pole moulded case circuit breaks shall be more than or at least, 25 kA and 50 kA as per IEC category P2, unless specified elsewhere. All incoming Triple pole circuit breakers shall be Moulded Case Circuit Breakers.

The Moulded Case Circuit Breakers shall be installed in the LV switchboards such that the switching lever of the Main Incoming MCCB shall be accessible from the front of the panel with the front door in closed position and the switching levers of all outgoing MCCB's and MCB's are accessible through the front plate inside the switchboards for operations. Circuit Numbers and Designation on all circuits shall be clearly marked to facilitate connection and maintenance.

4.2.3 Miniature Circuit Breaker (MCB)

The MCB's shall be Single pole 250 Volt and Triple pole 500 volts of current ratings as shown on the drawings. These shall have fixed magnetic short circuit and fixed thermal overload protections. The Single pole and Triple pole miniature circuit breakers shall have a 10 kA short circuit breaking capacity as per International standards IEC 157 Category P2.

The Miniature Circuit Breakers shall be installed such that their switching levers are accessible through the front plate inside the Switch Boards for operations. Circuit Numbers and Designation on all circuits shall be clearly marked to facilitate connection and maintenance. These Circuit Breakers shall be suitable for working on lighting and power circuits.

4.2.4 Push Buttons

Push buttons shall be momentary make break contact type (normally open/normally close). These shall be suitable for flush mounting. Distribution board, plastic face plate etc. Push buttons shall have round/square head.

4.2.5 AC Voltmeters

AC Voltmeters shall be Digital type and shall be suitable for flush mounting on front door of the Distribution Boards. The front dimensions shall be 96 mm Wide and 48 mm high. The voltmeters shall have 3-1/2 digit, 0.55 inch display.

4.2.6 Ammeters

AC Ampere meters shall be Digital type and shall be suitable for flush mounting on front door of the Distribution Boards. The front dimensions shall be 96 mm wide and 48 mm high. The Ampere meters shall have 3-1/2 digit, 0.55 inch display.

4.2.7 Voltmeter Selector Switch

The voltmeter selector switch shall be complete with front plate, grip handle, and RY-YB-BR-OFF-RN positions.

4.2.8 Current Transformers

Air cooled, ring type current transformers shall be provided having transformation ratio as indicated on the drawings. The current transformers shall be of suitable burden having accuracy class 1.0 and have 5 amps secondary.

4.2.9 Air Break Magnetic Contactors

The contactors shall be air break, triple pole, 415 Volt suitable for the type of duty to be performed. The main contacts shall be silver tipped, butt type with double break per pole. Each contactor shall be provided with 230 Volt AC single phase operating coil, and minimum two normally open (NO) and two normally closed (NC) auxiliary contacts wired up to terminals. The number of working auxiliary contacts shall be provided according to the system requirements.

4.2.10 Indicating Lamps

Indicating lamps shall be suitable for flush mounting, complete with base, either 230 Volt neon or 12 Volt incandescent lamp through auxiliary transformer and shall have rosettes of suitable colour.

4.2.11 Line up Terminals

Line up terminals wherever provided for control of lighting, power and control circuits shall be suitable for voltage and size of conductors as indicated on drawings and as mentioned in the respective BOQ items. The line-up terminals shall be suitable for channel mounting. All necessary accessories such as end-plates, fixing clips, transparent label holder caps and label sheets with marking shall be provided.

5.0 INSTALLATION

The location of distribution boards are shown diagrammatically on the drawings. The actual location shall be determined at site, keeping in view the site conditions and in coordination with other equipment.

Low Voltage distribution board for recessed mounting in wall shall be installed such that the door shall finish flush with the surface of wall. The recess mounted distribution board shall be installed before the plastering of walls. The DB shall be protected to avoid any damage due to the civil work.

All loose parts despatched separately with the DB shall be installed as per manufacturer instructions and all adjustments or setting shall be made, as required. All screws, nuts and bolts used for fixing the distribution board shall be galvanized. The distribution boards installation shall include connecting all incoming and outgoing cables. The cable entry in the boards shall be provided from top or bottom as required.

The distribution board body shall be connected to earth as per instructions given in section "Earthing" of these Specifications. The switchboard shall be tested and commissioned in the presence of the Engineer. The LV distribution boards shall be tested before energizing as per instructions contained in the article "Testing" of General Specifications for Electrical Works, Section-8001 of these Specifications.

Panels/DB opening for electrical, PSD & ITS etc cables shall be properly sealed with the water proofing material “Plastic Polyurethane Foam” as per relevant ASTM standard to avoid rain water/animal entry to the conduits. The contractor shall also provide the technical data of the sealant material before the execution of the work.

6.0 MEASUREMENT AND PAYMENT

6.1 General

The Contractor's bid amount against each item of Bill of Quantities as given below shall include design, fabrication, supply, installation, testing, commissioning and completion for all works specified herein and/or as shown on the Tender Drawing related to the item.

6.2 LV Distribution Board

6.2.1 Measurement

Measurement shall be made for the number of each type/designation of LV distribution boards acceptably supplied and installed by the Contractor as a complete job.

6.2.2 Payment

Payment shall be made for the number of each type/designation of jobs measured, as provided above, at the Contract unit price each for design,

fabricating, supplying, installing, testing, and commissioning of the LV distribution boards, including fixing arrangement and accessories for complete installation.

SECTION-5: SPECIFICATIONS OF LED LIGHTS

1.0 SCOPE OF WORK

The work under this section consists of manufacturing, fabricating, supplying, installing, earthing, testing and commissioning of all material with accessories and services for the complete LED fixtures as specified herein and as shown on the drawings and given in the Bill of Quantities.

The Contractor shall discuss the electrical layout with the Engineer and co-ordinate at site with other services for exact locations and positions of the LED fixtures.

The light fixtures with accessories shall also comply with the General Specifications as applicable for Electrical & Communications Works section- 8001 and with other relevant provisions of the Documents.

1.1 Type of Light Fixtures

A. Down Lighters

LED based fixture should be suitable for all indoor applications with different mounting provision of recessed & surface.

Luminaire should have color temperature options (3000K, 4000K, 6500K).

Color rendering index should be equal to or greater than 80 with different wattages 15W +/- 3W.Luminaire should have efficacy of more than 90lm/w with a lifetime span of 30000 hours @L70 +/- 5,000 hours and with a power factor not less than 0.85. Overall luminaire system efficiency should be more than 80%.. Earthing provision should be given inside the luminaire with the ingress protection of at least IP20.Standard Deviation of Color Matching (SDCM) shall be less than 5.System efficiency shall be more than 85% and Light output ratio LOR shall not be less than 90%. Luminaire should comply with IEC standards (60598, 62471), EMC test reports and third party certifications and relevant applicable standards

B. Batten Lights

LED Batten light should be suitable for all indoor applications with mounting provision of surface. Luminaire should have color temperature options (3000K, 4000K, 6500K).Color rendering index should be equal to or greater than 80 with different wattages from 8 to 32W.Luminaire should have efficacy of more than 85lm/w with a lifetime span of 30000 hours @L70 +/- 5,000 hours and with a power factor not less than 0.85. Overall luminaire system efficiency should be more than 80%.Luminaire should comply with IEC standards (60598, 62471), EMC test reports and third party certifications and relevant applicable standards.

Earthing provision should be given inside the luminaire with the ingress protection of at least IP20

C. Bulk Head

LED Bulk Head light should be suitable for all indoor/outdoor applications with mounting provision of surface. Luminaire should have color temperature options (3000K, 4000K, 6500K).Color rendering index should be equal to or greater than 80 with wattages from 18W to 25W Luminaire should have efficacy of more than 90lm/w with a lifetime span of 30000 hours @L70 +/- 5,000 hours and with a power factor not less than 0.85. Overall luminaire system efficiency should be more than 80%.Luminaire should comply with IEC standards (60598, 62471), EMC test reports and third party certifications and relevant applicable standards. Earthing provision should be given inside the luminaire with the ingress protection of at least IP20 for indoor and IP 65 for outdoor installations with IK 10.

D. In Ground Recessed Lights

LED Inground recessed lights shall be suitable for uplight effect applications with mounting provision of recessed type. The lifetime shall be within the range of 30,000 hours @L70 +/- 5,000 hours with an efficacy of more than 55 lm/w. Color rendering index shall be more than 80.Standard.Fixture power factor shall not be less than 0.80.

Fixture shall have different color temperature options ranging from 3000K to 5000K as per application requirements. System efficiency shall be more than 85% and Light output ratio LOR shall not be less than 90%. The fixture shall have ingress protection (IP) of atleast 67 and Impact Resistance (IK) 09 or above. It shall comply with EN 60598 and any other international standards as applicable.

E. Post top Lights

LED Post top lights shall be suitable for mounting on poles of height (3m-5m) for area lighting. The lifetime shall be within the range of 30,000 hours +/- 5000 hours with an efficacy of more than 90 lm/w. Color rendering index shall be more than 70.Standard.Fixture power factor shall not be less than 0.80.

Fixture shall have different color temperature options ranging from 3000K to 5000K as per application requirements. System efficiency shall be more than 85% and Light output ratio LOR shall not be less than 90%. The fixture shall have ingress protection (IP) of at least 66 and Impact Resistance (IK) 09 or above. It shall comply with EN 60598 and any other international standards as applicable.

1.2 Optics

The fixtures for interior lighting shall have flexible optical systems for the wattage range in the respective group.

The fixture shall use high efficiency LED and optics system.

The Light Output Ratio (LOR) shall not be less than 90%.

The fixture shall offer a composite system efficiency not less than 85 lumen/Watt or as specified in the relevant fixtures.

The multilayer optics design shall ensure adequate luminance and illuminance uniformity in the unlikely event of an individual LED failure.

The fixture shall offer choice of different beam light distribution.

The optical lens system shall feature long life with no discoloration (UV protection), highest possible light transmission and white painted circuit board for high reflectivity for maximum light output.

1.3 Warranty/Maintenance

The LED manufacturer /authorized agent/assembler shall not only be responsible for 5 years of warranty but also during the warranty period maintenance of the fixtures including free of cost replacements of any/all defective components/parts against manufacturing defects with the genuine products/components through the manufacturer/authorized agents under the supervision of the contractor/ maintenance agency.

The involvement of the manufacturer/authorized agent for maintenance/ replacement of components is considered important because the warranty of the manufacturer becomes void if genuine product/manufacturer recommended methodology/components installation is not followed. In addition to this it is also necessary that genuine branded products those offered at the time of supply with the fixtures are provided for the 5 years of warranty / component replacement period.

Undertaking in this regard shall be submitted by the contractor as well as manufacturer/authorized agent/assembler to the Client.

Further, if required, the manufacturer/authorized agent/assembler through contractor shall provide the proof of genuineness from the manufacturer for various components provided/installed in the fixtures after fulfilling the technical requirements

1.4 LED Driver/Electronic Control Gear for LED Modules

The LED driver shall be designed to operate luminaries LED with current controlled output through Class I electrical classification. The driver shall be suitable for nominal 230V, +10%, -15%, 50Hz mains supply. The LED driver shall have an efficiency of at least 85%.The relevant test report, as applicable shall be submitted by the manufacturer.

1.5 LED Chip

The LED chip shall be Philips Lumiled, Cree, Nichia, Osram, Samsung, LG make or equivalent in performance. (duly tested as specified and in full conformance to the technical requirements/specifications) as specified.

The LEDs shall:

- be designed for lumen maintenance of L_{70} or 70% at the end of useful life at ambient temperature of 35 deg C.
- have a useful life of(25000-35000 as specified for relevant fixture) burning hours.(± 5000 hrs)
- have a color rendering index (Ra) of 80 (+10/-10)and a color temperature 2700K-6500K.as per application requirements
- have a color consistency within 5 SDCM (standard deviation of color matching) as defined by MacAdam.
- LM 80 Report with TM21 extrapolation graph must be attached.

1.6 Thermal Management

Managing thermal properties in LED fixtures is most critical to ensure optimum performance of LEDs and reliability of the system.

The housing under the circuit board shall be specially designed to ensure perfect contact between the board and the fixture housing for efficient heat dissipation.

PCBs shall be used to maximize heat transfer process and to offer reinforced electrical insulation via dielectric layer. The PCB shall be mounted on the housing using a highly efficient thermal interface material. Use of Silicon glue is not acceptable.

The housing over the driver chamber shall have ribs or any other mechanism with adequate surface area to ensure fast heat dissipation.

1.7 Photometrics

Fixtures shall have Illumination Engineering Society (IES) files of different distribution patterns.

LM-80 LED and photometric test reports and IES files from a third party testing laboratory shall be available.

1.8 Technical Data and Drawings

Technical and descriptive data and drawings to be submitted shall include but not be limited to the following:

i) Technical data of fixtures and driver

ii) IES photometric file

iii) Customer testimonials

iv) Factory ISO certificate

v) Reports of other type tests stipulated in the respective standards/codes, if any applicable

2.0 INSTALLATION

The installation of LED light fixtures shall be in strict accordance with the manufacturer's instructions/recommendations and these specifications.

3.0 MEASUREMENT AND PAYMENT

i) General

The Contractor's bid amount against each bill of quantities item as given shall include supply, installation, testing, commissioning and completion of all work specified herein and/or shown on the Drawings related to the LED light fixture.

ii) Measurement

Measurement shall be made as complete job for all related equipment such as power supply, driver etc. along with all accessories acceptably supplied and installed by the Contractor as a complete unit.

iii) Payment

Payment shall be made for the number of units measured, as provided alone, at the contract unit price and shall constitute full compensation for supplying installing, testing and commissioning along with all accessories.

LED PANEL LIGHT:

Product: LED Panel light fixture (30 watts- 40 watts) recessed/suspended/surface mounted

Specifications:

The LED light fixture (Panel type) should be recessed/suspended/surface mounted and have capability deliver energy efficiency without sacrificing light quality in general lighting applications.

The system efficacy of the light fixture should at least 90 lm/W.

Luminaire must provide minimum 50% energy-saving compared with conventional Fluorescent light fixture. The system lumens output of the light fixture should not be less than 3500 lumens.

The Color Rendering Index of the fixture should be greater than >80 and SDCM of the light fixture <=5. The color temperature of the light fixture should be more than 5000K

The ambient temp for the light fixture is - 2°C < Ta < 40°C.

Housing:

The housing will include integrated heat sink and optical system. The housing will be made of Plastic frame in white color, & the heat sink will make of aluminium for better heat transfer.

The light cover made up of PCPS diffuser + PMMA light guide panel + PET reflector.

Luminaire Optics:

For the better UGR control one, the luminaire optics should fully comply with office lighting norms with UGR value (Unified Glare Rating) < 25.

Optical requirements:

The beam angle of the optic should be around 120º. The UGR25 version comes with a glare control ring to provide a comfortable light ambiance.

Mounting Type

The luminaire shall have provision of both Recessed, Suspended and surface mounting with dimension compatible to conventional florescent fixture 597 x 597 x 46mm. Suspension kit for suspended version must be available

Electrical requirements:

Power supply: Electronic LED gear for 220 V - 240 V/50~60Hz.

Power Factor of the light fixture >0.9
Electrical Classification Class I

LED:

The LED chip shall be Philips Lumiled, Cree, Nichia, Osram, make or equivalent (duly type tested as specified and in full conformance to the technical requirements/specifications).

The LEDs shall:

- Be designed for lumen maintenance of L70 or 70% at the end of useful life
- Have a useful life of 50,000 burning hours.
- Have a minimum color rendering index (Ra) of 70 (+10/-10) and a color temperature above 5000K .
- Have a color consistency within 7 SDCM (standard deviation of color matching) as defined by MacAdam.
- LM 80 Report with TM21 extrapolation graph must be attached.

LED Driver/Electronic Control Gear for LED Modules

The LED driver shall be designed to operate large array of high powered LEDs through current controlled output. The driver shall be suitable for 230V, +10%, -15%, 50Hz, single phase mains AC supply.

The LED driver shall have an efficiency of at least 85%.

The LED driver shall be of Harvard, TCI, Philips, VOSSLOH Schwabe Make or equivalent (duly type tested as specified and in full conformance to the technical requirements/specifications).

Applicable Standards and Codes

The luminaire should fully conform to the following standards (the supplier/contractors shall furnish the detailed type test reports for the luminaries being offered to establish conformance to the specified requirements) :

1. IEC 60598-1
2. IEC 60598-2-2– Electrical Insulation Class I
3. IEC62031: LED modules for general lighting – Safety specifications
4. LM-79
5. LM 80 Report with TM21 extrapolation graph must be attached.
6. IES Photometry file

All test reports and certificates must be from third party accredited laboratory.

LED Driver Specifications:

The LED driver shall be designed to operate luminaire LED array with current controlled output through Class I electrical classification. The driver shall be suitable for nominal 220V-240V 50/60Hz mains supply. The LED driver shall have an efficiency of at least 90%.

The LED Driver/fixture should fully conform to the following standards (the supplier/contractors shall furnish the detailed type test reports for the luminaries being offered to establish conformance to the specified requirements) :

1. EN 55015 : 2013 – Emission – Electrical lighting and similar equipment
2. EN 61547: 2009 – Immunity – Equipment for general lighting purpose
3. EN 61000-3-2 : 2009 – Limits for harmonic currents emissions.
4. EN 61000-3-3 : 2008 – Limits for voltage fluctuation and flicker.
5. IEC62471 2008 :Photo biological safety of lamps and lamps systems
6. IEC 62778
7. EN 62493 Assessment of lighting equipment related to human exposure to electromagnetic fields

All test reports and certificates must be from third party accredited laboratory.

Warranties

The LED manufacturer /authorized agent/assembler shall not only be responsible for 5 years of warranty but also during the warranty period maintenance of the fixtures including free of cost replacements of any/all defective components/parts against manufacturing defects with the genuine products/components through the manufacturer/authorized agents under the supervision of the contractor/ maintenance agency.

The involvement of the manufacturer/authorized agent for maintenance/ replacement of components is considered important because the warranty of the manufacturer becomes void if genuine product/manufacturer recommended methodology/components installation is not followed. In addition to this it is also necessary that genuine branded products those offered at the time of supply with the fixtures are provided for the 5 years of warranty / component replacement period.

Undertaking in this regard shall be submitted by the contractor as well as manufacturer/authorized agent/assembler to the Client.

Further, if required, the manufacturer/authorized agent/assembler through contractor shall provide the proof of genuineness from the manufacturer for various components provided/installed in the fixtures after fulfilling the technical requirements

Technical and Descriptive Data and Drawings

Technical and descriptive data and drawings to be submitted shall include but not be limited to the following:

- Technical data of fixtures and driver
- IES photometric file
- All detailed type test reports to establish conformance to specified international codes and standards as stipulated above.
- LM-80 test report of LED used
- 3rd Party IEC 60598 test reports specific to the fixtures being offered.
- EMC test report
- Photo- biological safety test report
- Customer testimonials
- Factory ISO certificate
- Reports of other type tests stipulated in the respective standards/codes

International Independent Laboratories

For the specified requirements of type tests and type test reports by an independent authority/independent laboratory (specific to their status/approval for performance of specific test(s) on the fixtures as defined in the project), the following laboratories shall be considered as independent laboratories:

- KEMA Labs, Holland.
- CESI Labs, Italy.
- CRIEPI Labs, Japan.
- Any other laboratory accredited by EA (European Co-Operation for Accreditation) or a member thereof.
- Any other laboratory accredited by ILAC (International Laboratory Accreditation Cooperation) or a member thereof.
- Any other laboratory accredited by IAF (International Accreditation Forum) or a member thereof.
- Any other laboratory accredited by STL (Short-Circuit Testing Liaison) or a member thereof.

SECTION – 6: MEDIUM VOLTAGE (MV) CABLE

1.0 SCOPE OF WORK

The work under this section consists of supplying, installing, testing and commissioning of all material and services of Medium Voltage (15KV) cables and the accessories as specified herein or as shown on the Tender Drawings and in the Bill of Quantities.

The Contractor shall discuss the electrical layout with the Engineer and coordinate at site with other services for exact route, location and position of the electrical lines.

The MV cables with accessories shall also comply with the General Specifications for Electrical Works Section-8001 and with other relevant provisions of the Tender Document and latest WAPDA Specifications.

2.0 GENERAL

The cable shall be suitable for nominal service voltage of 11 kV, have copper conductor and be cross-linked polyethylene (XLPE), insulated, shielded, armoured and sheathed. It shall be suitable for indoor and outdoor use in the transmission and distribution of electrical energy.

3.0 APPLICABLE STANDARD/CODES

Latest editions of the following standards and codes shall be applicable for the materials within the scope of this Section:

IEC 183	-	Guide to the selection of HV cables.
IEC 502	-	Extruded solid electric insulated power cable for rated voltage from 1kV to 30 kV
IEC 540	-	Test methods for insulation and sheaths of electrical cables and cords.

4.0 MATERIAL

4.1 MV Cable

The cable shall meet the following specifications:

Nominal/System Voltage	-	11 KV
Frequency	-	50 HZ
System	-	3 phase

Conductor Size	-	Given in BOQ
Number of Cores	-	3 numbers
Rated Voltage	-	15 KV phase to phase 8.76 KV phase to ground
Continuous Operating Temperature of conductor	-	90 degrees Celsius
Conductor material	-	Copper stranded
Insulation	-	Cross-linked polyethylene
Shielding	-	Copper tape
Jacket	-	PVC
Armoring	-	Galvanized wire
Over sheathing	-	Extruded PVC
Phase identification	-	Red, Yellow, Blue

4.1.1 Conductor Material

The conductors shall be of high conductivity electrolytic copper stranded in accordance with specified standard.

4.1.2 Insulation

The insulation shall be cross-linked polyethylene extruded over the conductor. The insulation shall be laid to avoid any gap/air pockets between the conductor and insulation.

The insulation shall be easy to strip from individual conductors and to separate for jointing/termination purposes.

4.1.3 Shielding

A layer of semi-conducting material applied directly over the insulation shall shield each core. A bare copper tape applied with suitable overlapping shall cover the semi-conducting insulation.

Phase identification tape of red, yellow, and blue colour shall be wrapped over the copper shield.

4.1.4 Assembly

The three insulated conductors shall be assembled with PVC or any non-hygroscopic filler and bound with tape. The tape binder shall then be covered with extruded PVC jacket. The PVC jacket shall be padded with a suitable material before application of armour.

4.1.5 Armour

Armoring shall be provided with single layer of galvanized steel wire to provide cable protection and also act as a low resistance earth return path. The armoring shall be covered with binder tape. The armour shall be of appropriate size to carry the system fault current.

4.1.6 Oversheath

The entire cable assembly shall be covered with a PVC jacket of thickness not less than 2.5mm. The colour of the jacket shall be black. In addition to any other marking proposed by manufacturer, the size of cable and voltage grade shall be given on the oversheath at every 3 meters interval.

4.2 Cable Reels

The cable shall be supplied in non-returnable, mechanically strong, sea/rail/road worthy, wooden or metallic cable drums, protected against weather. The cable drum should bear the markings for cable type, cable size, voltage grade, year of manufacture, name of manufacturer, direction of unreeling and any other additional marking normally provided by the manufacturer. Cable ends on cable reels shall be protected by means of suitable seal.

4.3 Factory Tests

Physical and electrical acceptance tests in accordance with applicable standard shall be carried out at the manufacturer works. Three copies of test reports will be furnished to the Engineer, which shall include brief description of tests, test records and results.

5.0 INSTALLATION

5.1 General

The Contractor shall furnish all installation material, labour, tools and accessories for cable installation. The cable and accessories shall be installed as described in accordance with the installation instructions given in the Section for Low Voltage Cable of these Specifications, drawings and in accordance with manufacturer's instructions. Prior to installation of jointing and termination kits, the cable lengths shall be checked and tested to ensure

that the cables are in sound condition and no damage has been done during handling and installation. After the MV cable and jointing/termination kits are installed, it shall again be tested prior to commissioning and in accordance with recommendations of standard to which the cable is manufactured.

The Contractor shall confirm exact cut lengths for the cable by actual measurements at site prior to the commencement of manufacturing. The cable lengths where shown on the drawing are tentative and only for general guidance. The Contractor shall be solely responsible for furnishing correct lengths of cable to avoid joints in cable length except where necessary, after obtaining approval of the Engineer.

Conduits/ pipes/ ducts for electrical, PSD & ITS etc cables shall be properly sealed with the water proofing material "Plastic Polyurethane Foam" as per relevant ASTM standard to avoid rain water entry to the conduits. The contractor shall also provide the technical data of the sealant material before the execution of the work.

5.2 Underground Cables

The cables to be installed directly underground shall be laid in trenches in single tiers. Unless that shown specifically on the drawing the depth of cable below finished ground level shall be 900-mm minimum measured from the top of the largest cable to the general ground level. The burial depth may be increased as required due to site conditions or when crossing other service pipes and roads. Burial depth less than 900mm and more than 1500mm shall require Engineer's approval.

When cables cross road, paved area, other services or other cables, they shall be laid in protective pipes of required size. Cables entering the buildings shall also be laid in protective pipes. The protective pipe ends, after installation of cables, shall be plugged water tight by means of bituminised resin or equivalent method as approved by the Engineer. A minimum clearance of 250mm vertically and 500mm horizontally shall be maintained between cables and other services.

The cable trench shall be excavated as per route and location shown on the drawing. Before laying of cables in the trench, the bed of the trench shall be leveled and filled with a 75mm thick layer of fine sand (1.3mm diameter maximum particles size). The sand layer shall be leveled and the cables placed thereon. The cables shall be covered with a layer of fine sand 75mm thick measured above the top of the largest cable. The cable protective bricks place above the top of sand cover shall be of class-A cement concrete, minimum 50mm thick and 300mm square. The bricks shall be placed over the sand layer end to end to cover the entire length and breadth of the cable trench. After the concrete bricks are placed, the remainder of the trench shall be backfilled with earth in layer 400mm thick. Each layer shall be thoroughly tamped and compacted.

Cable identification tags of corrosion resistant material shall be tied to cables with bronze wire at a maximum of 20 metre interval along the cable length for identification of cable and circuit. The earth continuity conductor shall be laid in the trench with the cables. The Contractor shall submit to the Engineer for approval, schedule of cable markers showing location of marker and instructions on each.

Sufficient slack shall be left in cables for which purpose the cut lengths of cables shall allow about 3% more in the measured lengths between terminations. At underground joint box, ample slack shall be left to prevent straining of cable joints due to settlement of the cable trench. The cut lengths of cables wherever stated are only as a guide. The Contractor shall measure lengths between terminations of each circuit and if the discrepancy between measured lengths at site and where given on the drawing differ by more than 5%, the Contractor shall report to Engineer and act as directed. Cables, whether installed underground, or in cement concrete trenches, shall not be bent to a radius less than that recommended by the cable manufacturers.

5.3 Cable Marker

Above ground, cable markers shall be erected at 30 metre intervals along the straight trench, and at each bend and joint box for indication of presence of underground cable. For more than one metre wide trenches, cable markers shall be provided at both edges of the trench. The cable marker shall bear the necessary instructions indicated in approved colours. The Contractor shall furnish samples of cable marker for approval of Engineer before installation. The marker shall be welded to 50x50x4 mm angle iron fixed to the ground on a cement concrete base or as directed by the Engineer.

6.0 MEASUREMENT AND PAYMENT

6.1 General

The Contractor's bid amount against each item of Bill of Quantities as given below shall include supply, installation, testing, commissioning and completion for all work specified herein and/or as shown on the Tender Drawing related to the item.

6.2 MV Cable

6.2.1 Measurement

Measurement shall be made for the total number of running meters or running feet of MV cable acceptably supplied and installed by the

Contractor and which has satisfactorily passed all the required tests prior to and after installation.

6.2.2 Payment

Payment shall be made for the total number of running meters or running feet of the MV cable, as provided above, at the Contract unit price and shall constitute full compensation for supplying, installing, connecting, testing and commissioning of the MV cable including all accessories.

6.3 Excavation of Cable Trench

6.3.1 Measurement

Measurement shall be made for the number of cubic feet or cubic meters for excavation of each size of cable trench acceptably carried out by the Contractor.

6.3.2 Payment

Payment shall be made for the number of cubic feet or cubic meters of excavation for each size of cable trench measured, as provided above, at the Contract unit price each and shall constitute full compensation for excavation of the cable trench in ordinary soil & slightly rocky site.

6.4 Backfilling of Cable Trench

6.4.1 Measurement

Measurement shall be made for the number of cubic feet or cubic meters of backfilling for each size of cable trench acceptably carried out by the Contractor.

6.4.2 Payment

Payment shall be made for the number of cubic feet or cubic meters of backfilling for each size of cable trench measured, as provided above, at the Contract unit price each. The payment shall constitute full compensation for four-inch thick sand bed, four inch thick sand cover, cable protective tiles/ bricks, backfilling of already excavated earth, watering, compaction, consolidating, etc. complete to the satisfaction of the Engineer.

6.5 Cable Marker

6.5.1 Measurement

Measurement shall be made for the number of each size and type of cable markers acceptably supplied and installed by the Contractor as a complete unit.

6.5.2 Payment

Payment shall be measured for the number of units measured as above at the Contract price each and shall constitute full compensation for the supplying and installation of cable markers.

SECTION – 7: LOW VOLTAGE CABLE

1.0 SCOPE OF WORK

The work under this section consists of supplying, installing, testing and commissioning of all material and services of Low Voltage cables and the accessories as specified herein or as shown on the Tender Drawings and in the Bill of Quantities.

The Contractor shall discuss the electrical layout with the Engineer and coordinate at site with other services for exact route, location and position of the electrical lines.

The LV cables with accessories shall also comply with the General Specifications for Electrical Works Section-8001 and with other relevant provisions of the Tender Document and latest WAPDA specifications.

2.0 GENERAL

All single core PVC insulated cables for the following shall be of 600/1000 volt grade copper conductor cables;

- wiring of light circuits
- switch to point wiring
- light point to light point wiring
- wiring of circuits for 5 amps, 250 volt, 2&3 pin switch socket unit
- wiring between 5 amps, 250 volt, 2&3 pin switch socket units
- wiring of push buttons & Between Push Buttons
- wiring of light circuits controlled by push buttons
- wiring between light circuits controlled by push buttons

All single core PVC insulated power cables for the following shall be copper conductor and of 600/1000 volt grade:

- wiring of circuits for 15 amps, 250 volt, 3 pin switch socket unit
- wiring between 15 amps, 250 volt, 3 pin switch socket units
- wiring of circuits for 20 amps, 250 volt, 3 pin switch socket unit

All multicore unarmoured control cables shall be copper conductor and of 300/500 volt grade.

All multicore unarmoured power cables shall be copper conductor and of 600/1000 volt grade.

All multicore armoured power cables shall be copper conductor and of 600/1000 volt grade.

3.0 APPLICABLE STANDARDS/CODES

The latest editions of the following standards and codes shall be applicable for the materials within the scope of this section:

BS 6004	-	PVC insulated cables (non-armoured) for electric power & lighting
BS 6346	-	PVC insulated cables for electricity supply
BS 6746	-	PVC insulation and sheath of electric cables
BS 6360	-	Conductors for insulated cables
IEC 228	-	Conductors for insulated cables
BS 6500	-	Insulated flexible cords

4.0 MATERIAL

4.1 General

The power, lighting and control cables shall be furnished and installed in accordance with the details shown on the drawings. The general guide lines and criteria for reference is given below:

4.1.1 Phase Identification

All cables shall have phase identification colors on insulation of each core. The colour code for three phase circuits shall be;

- Red, Yellow and Blue for phase conductors.
- Black for neutral conductor.
- Green for earth conductor where PVC insulated cable is installed.

Single phase circuits shall have insulation of;

- Red colour for phase/line

- Black colour for neutral
- Green colour for earth conductor.

All DC circuits shall have insulation of;

- Red colour for positive conductor
- Black colour for negative conductor
- Green colour for earth conductor.

4.1.2 Cable Accessories

All accessories shall be provided for the complete cabling and wiring systems. These shall include but not limited to items such as saddles, clamps, fixing channels, connectors, cable joints (where necessary and as approved by the Engineer), clips, lugs, tapes, solder, identification tags, bushes, glands, etc.

5.0 INSTALLATION

5.1 Conduit Wiring

The wiring through conduit shall be started only after the conduit system is completely installed and all outlet boxes, junction boxes, etc., are fixed in position.

The wires shall be pulled in conduit with care, preferably without the use of any lubricant. Where necessary and after approval of Engineer, the cable manufacturer's recommended lubricant shall be used. Use of any kind of oil or soap will not be permitted. Where several wires are to be installed in the same conduit, they shall be pulled together alongwith the earth conductor. All wires of same circuit shall be run in one conduit.

The wires shall not be bent to a radius less than ten times the overall diameter of the wire, or more if otherwise recommended by the manufacturer.

The wiring shall be continuous between terminations and looping-in system shall be followed throughout. Any joint in wires shall not be allowed. The use of connectors shall only be allowed at locations where looping-in is rendered difficult. The consent of the Engineer shall be required for using connectors. The connector shall be of suitable rating having porcelain body, sunk-in screw terminals. The connector shall be wrapped with PVC insulation tape after its installation. A minimum of 150 mm extra length of cable/wire shall be provided at each termination to facilitate repairs in future.

5.2 Cables on Surface

All cables for installation on surface of wall, column, ceiling, etc., shall be fixed to the surface by means of galvanized steel clips secured to a steel channel by means of suitable stud plate, nuts and washer. The distance between each cable clip to be such, so as to support the entire weight of the cable and that, distance between the cable and surface and also the vertical clearance between two adjacent cables at any point is 50mm minimum. Common mounting channels are to be furnished for cable along the same route. The Engineer before commencement of installation shall approve alternate cable fixing arrangement, which the Contractor can offer.

5.3 Cables in flexible/rigid conduits on surface

All cables for on surface conduits shall be installed through the conduits without the use of lubricants. The flexible/rigid conduits shall be fixed to wall/ceiling surface by means of cable clamps using rawl plays and galvanized screws.

5.4 Underground Cable

The cables to be installed directly underground shall be laid in trench in single ties. The depth of cable under ground, shall be three feet minimum, measured from the top of the largest cable to the general ground level. The burial depth may be increased as required due to site conditions or when crossing other service pipes and roads. Burial depth less than three feet and more than five feet shall require Engineer's approval.

When cables cross road, paved area, other services or other cables, they shall be laid in protective pipes of required size. Cables entering the buildings shall also be laid in protective pipes. The protective pipe ends, after installation of cables shall be plugged water tight by means of bituminised resin or equivalent method as approved by the Engineer. A minimum clearance of ten inches vertically and 20 inches horizontally shall be maintained between cables and other services.

Cable identification tags of corrosion resistant material shall be tied to cables with bronze wire at a maximum of 65 feet interval along the cable length for identification of cable and circuit. Above ground cable markers of 8 SWG (4 mm) sheet steel and 200 mm^2 shall be erected at 100 feet intervals along the straight trench, and at each bend and joint box for indication of presence of underground cable. For more than three feet wide trenches, cable markers shall be provided at both edges of the trench. The cable marker shall be finished in gray heavy enamel paint over two base coats of anti-rust red oxide paint, with the necessary instructions indicated in approved colours.

The Contractor shall furnish samples of cable marker for approval of Engineer before installation. The marker shall be welded to an angle iron fixed to the ground on a cement concrete base or as directed by the Engineer. The earth continuity conductor shall be laid in the trench with the cables. The Contractor

shall submit to the Engineer for approval, schedule of cable markers showing location of marker and instructions on each.

The cable trench shall be excavated as per route and location shown on the drawing. Before laying of cables in the trench, the bed of the trench shall be leveled and filled with a four inch thick layer of fine sand (1/32 inch diameter maximum particles size). The sand layer shall be leveled and the cables placed thereon, the cables shall be covered with a layer of fine sand Four inch thick measured above the top of the largest cable.

The cable protective bricks placed above the top of sand cover shall be of Class - C cement concrete, minimum Two inch thick and 12 inches x 12 inches square or as approved by the Engineer. The bricks shall be placed over the sand layer end to end to cover the entire length and breadth of the cable trench, after the concrete bricks are placed, the remainder of the trench shall be backfilled with earth in layer 16 inches thick. Each layer shall be thoroughly tamped and compacted.

Sufficient slack shall be left in cables for which purpose the cut lengths of cables shall also about 3% more in the measured lengths between terminations. At underground joint box, ample slack shall be left to prevent straining of cable joints due to settlement of the cable trench.

The cut lengths of cables wherever stated are only as a guide. The Contractor shall measure actual lengths between terminations of each circuit and if the discrepancy between measured lengths at site and where given on the drawing differ by more than ±10% the Contactor shall report to Engineer and act as directed. Cables, whether installed underground, or in cement concrete trenches, shall not be bent to a radius less than that recommended by the cable manufacturers.

Conduits/ pipes/ ducts for electrical, PSD & ITS etc cables shall be properly sealed with the water proofing material “Plastic Polyurethane Foam” as per relevant ASTM standard to avoid rain water entry to the conduits. The contractor shall also provide the technical data of the sealant material before the execution of the work.

6.0 MEASUREMENT AND PAYMENT

6.1 General

The Contractor's bid amount against each Bill of Quantities item as given below shall include supply, installation, testing, commissioning and completion for all work specified herein and/or as shown on the Tender Drawing related to the item.

6.2 Light Circuit Wiring

6.2.1 Measurement

Measurement shall be made for the total number of light circuit wiring from LV distribution board/LV switchboard to point/switch including wiring between switches on same circuit, acceptably carried out by the Contractor as a complete unit.

6.2.2 Payment

Payment shall be made for the total numbers of units measured, as provided above, at the Contract unit price each. The payment shall constitute full compensation for supplying, installing, connection, testing, commissioning and completion of the circuit wiring from the LV switchboard/LV distribution board to point/switch including wiring between switches on same circuit complete with conduit, wire/cable, earth continuity conductor, accessories, etc.

6.3 Light/Fan Point/Point to Point Wiring

6.3.1 Measurement

Measurement shall be made for each light point, wiring between the light point and switch, point to point, acceptably carried out by the Contractor as a complete unit.

6.3.2 Payment

Payment shall be made for the total numbers of units measured, as provided above, at the Contract unit price each. The payment shall constitute full compensation for supplying, installing, connecting, testing, commissioning and completion of the wiring between light point to switch and point to point including required size of cable, conduit, earth continuity conductor, flexible cable, ceiling rose, accessories, etc.

6.4 Wiring of Lights Directly Controlled from Distribution Board/Local MCBs/Wiring of Push Buttons

6.4.1 Measurement

Measurement shall be made for wiring of each light point directly controlled from distribution board or local MCBs type switch and wiring of push buttons acceptably carried out by the Contractor as a complete unit.

6.4.2 Payment

Payment shall be made for the total numbers of units measured, as provided above, at the contract unit price each. The payment shall constitute full compensation for supplying, installing, testing and commissioning of wiring of light points directly controlled from distribution boards or local MCB type switches and wiring of push buttons including required size of wire, conduit, earth continuity conductor, flexible cable, ceiling rose, accessories, etc.

6.5 Wiring of 5Amps, 250Volt Combined 2 & 3 pin Switched Socket Unit from LV switchboard/Distribution Board

6.5.1 Measurement

Measurement shall be made for number of points for wiring of 5Amps, 250 Volt, combined 2 & 3 pin switched socket unit acceptably carried out by the Contractor as a complete unit.

6.5.2 Payment

Payment shall be made for the total numbers of units measured, as provided above, at the contract unit price each. The payment shall constitute full compensation for supplying, installing, connecting, testing, commissioning and completion of wiring for 5 Amps 250 Volt, combined 2 & 3 pin switched socket unit from LV switchboard/ distribution board including specified size of single core PVC cables including conduit, ECC, PVC conduit, accessories etc. complete in all respects.

6.6 Wiring between 5Amps, 250Volt Combined 2 & 3 pin Switched Socket Units

6.6.1 Measurement

Measurement shall be made for number of points for wiring between 5Amps, 250 Volt, combined 2 & 3 pin switched socket unit acceptably carried out by the Contractor as a complete unit.

6.6.2 Payment

Payment shall be made for the total numbers of units measured, as provided above, at the contract unit price each. The payment shall constitute full compensation for supplying, installing, connecting, testing, commissioning and completion of wiring between 5 Amps 250 Volts, combined 2 & 3 pin switched socket unit including specified size of single core PVC cables including conduit, ECC, PVC conduit, accessories etc. complete in all respects.

6.7 Wiring of 15Amps, 250Volt 3 pin Switched Socket Unit from LV Switchboard/Distribution Board/Bus Bars

6.7.1 Measurement

Measurement shall be made for number of points for wiring of 15Amps, 250 Volt, 3 pin switched socket unit acceptably carried out by the Contractor as a complete unit.

6.7.2 Payment

Payment shall be made for the total numbers of units measured, as provided above, at the contract unit price each. The payment shall constitute full compensation for supplying, installing, connecting, testing, commissioning and completion of wiring for 15 Amps 250 Volt, 3 pin switched socket unit from LV switchboard/distribution board/Bus Bars including specified size of single core PVC cables including conduit, ECC, PVC conduit, accessories etc. complete in all respects.

6.8 Wiring between 15Amps, 250Volt 3 pin Switched Socket Units

6.8.1 Measurement

Measurement shall be made for number of points for wiring between 15 Amps, 250 Volt, 3 pin switched socket unit acceptably carried out by the Contractor as a complete unit.

6.8.2 Payment

Payment shall be made for the total numbers of units measured, as provided above, at the contract unit price each. The payment shall constitute full compensation for supplying, installing, connecting, testing, commissioning and completion of wiring between 15 Amps 250 Volt, 3 pin switched socket units including specified size of single core PVC cables including conduit, ECC, PVC conduit, accessories etc. complete in all respects.

6.9 Wiring of 20Amps, 250Volt 3 pin Switched Socket Unit from LV Switchboard/ Distribution Board

6.9.1 Measurement

Measurement shall be made for number of points for wiring of 20 Amps, 250 Volt, 3 pin switched socket unit acceptably carried out by the Contractor as a complete unit.

6.9.2 Payment

Payment shall be made for the total numbers of units measured, as provided above, at the contract unit price each. The payment shall constitute full compensation for supplying, installing, connecting,

testing, commissioning and completion of wiring for 20 Amps 250 Volt, 3 pin switched socket unit from LV switchboard/ distribution board including specified size of single core PVC cables including conduit, ECC, PVC conduit, accessories etc. complete in all respects.

6.10 LV Cables

6.10.1 Measurement

Measurement shall be made for the number of running feet for each size and type of LV cable acceptably supplied and installed by the Contractor.

6.10.2 Payment

Payment shall be made for the number of running feet of each size of cable measured, as provided above, at the Contract unit price each and shall constitute full compensation for supplying, installing, connecting, testing and commissioning of the LV cables including all accessories.

6.11 Excavation of Cable Trench

6.11.1 Measurement

Measurement shall be made for the number of cubic feet for excavation of each size of cable trench acceptably carried out by the Contractor.

6.11.2 Payment

Payment shall be made for the number of cubic feet of excavation for each size of cable trench measured, as provided above, at the Contract unit price each and shall constitute full compensation for excavation of the LV cable trench in ordinary soil and slightly rocky site.

6.12 Backfilling of Cable Trench

6.12.1 Measurement

Measurement shall be made for the number of cubic feet of backfilling for each size of cable trench acceptably carried out by the Contractor.

6.12.2 Payment

Payment shall be made for the numbers of cubic feet of backfilling for each size of cable trench measured, as provided above, at the Contract unit price each. The payment shall constitute full compensation for four-inch thick sand bed, four inch thick sand cover, cable protective tiles/bricks, backfilling of already excavated earth, watering,

compaction, consolidating, etc. complete to the satisfaction of the Engineer.

SECTION – 8: SWITCH FITTINGS & ACCESSORIES

1.0 SCOPE OF WORK

The work under this section consists of supplying, installing, and commissioning of all material and services of the complete switch fittings and accessories as specified herein, as shown on the Tender Drawings and stated in the Bill of Quantities.

The Contractor shall discuss the electrical layout with the Engineer and co-ordinate at site with other services for exact location and position of all electrical equipments.

The switch fittings and accessories shall also comply with the General Specifications for Electrical & Communications Works Section-8001 and with other relevant provisions of the Tender Documents.

2.0 GENERAL

The Light control switches, switch socket units, Fan Controllers, Industrial socket units, etc. shall be of following ratings;

- Light Switches rated for 10A, 250 Volt
- Fan dimmers rated for 100W, 250 Volt,
- Shuttered 3 pin rated for 15A, 250 Volt,
- Shuttered 3 pin rated for 20A, 250 Volt,

The locations of the switch fittings & accessories such as sockets, switches etc. are tentatively shown on the drawings. The Contractor shall ensure the exact positions and locations of wiring accessories in coordination with other services drawings, as per site requirements and as directed by the Engineer.

3.0 APPLICABLE STANDARDS/CODES

The latest edition of following standards codes shall be applicable for the materials within the scope of this section:

BS 2135	-	Capacitors for radio interference suppression.
BS 546	-	3 pin plugs, socket outlets and socket outlet adapter for circuits up to 250 volts.
BS 67	-	Two and three terminal ceiling roses.
BS 4934	-	Safety requirements for electric fans and regulators.
BS 5060	-	Performance of circulating fans and their regulators.

4.0 MATERIAL

4.1 One Way Switches - Indoor type

Switches for controlling light points shall be single pole, rated for 10 Amps, 250 Volt AC. The body of the switches shall be suitable for flush mounting on PVC back box/outlet box. The switches shall have screw contacts and shall operate with snap action.

4.2 Two Way Switches - Indoor Type

Two way switches for control of lights shall be of same make and specifications as for one way switches above, except these shall be of use to control light circuits from two different locations.

4.3 Switched Socket Outlets

Switched Socket units shall be of the following combinations and ratings:

- Shuttered 3 pin rated for 15A, 250 Volt,
- Shuttered 3 pin rated for 20A, 250 Volt,

Front face plate shall conform to the requirements stated above for switches - Indoor type. The outlets shall be heavy duty type suitable for mounting on PVC outlet box. The 3 pin 15 amps and 3 pin 20 Amps sockets shall have shrouded live contacts and designed such that the earth pin of plug is engaged to socket earth before mating of live contacts.

4.4 Fan Controller

Fan Controller for fan speed regulating shall be suitable for Ceiling fans, rated for 10 Amps, 250 Volt AC. The body of the fan Controller shall be suitable for flush mounting on PVC back box/ outlet box. The fan Controller shall have ON/OFF switch that shall operate with click action.

4.5 Outlet Box

The outlet boxes for installation of switches, Dimmers and socket outlets shall be of PVC having appropriate dimensions. The box shall have suitable arrangement for receiving the conduit.

5.0 INSTALLATION

5.1 General

The mounting heights of all wiring accessories fixtures are stated on the drawings. In case the mounting height is not mentioned, the instructions of the Engineer Incharge shall be obtained before fixing.

5.2 Light Control Switches

The Light Control Switches shall be installed directly on back boxes/outlet boxes recessed in CC/RCC walls or columns. The fixing of Light Control Switches shall be by means of screws provided with them so as to finish flush with the surface.

5.3 Switched Socket Outlets

The Switched Socket Outlets shall be installed directly on back boxes/outlet boxes recessed in CC/RCC walls or columns. The fixing of Switched Socket Outlets shall be by means of screws provided with them so as to finish flush with the surface.

5.4 Fan Controllers/Light Dimmers

The Fan Controllers/Light Dimmers shall be installed directly on back boxes/outlet boxes recessed in CC/RCC walls or columns. The fixing of Fan Controllers/Light Dimmers shall be by means of screws provided with them so as to finish flush with the surface.

6.0 MEASUREMENT AND PAYMENT

6.1 General

The Contractor's bid amount against each Bill of Quantities item as given below shall include supply, installation, testing, commissioning and completion for all work specified herein and/or as shown on the Tender Drawing related to the item.

6.2 Light Control Switches

6.2.1 Measurement

Measurement shall be made for the number of each item acceptably supplied and installed by the Contractor as a complete unit.

6.2.2 Payment

Payment shall be made for the total number of units measured, as provided above, at the Contract unit price each and shall constitute full compensation for supplying, installing, connecting, testing and completion of each type and rating of the Light Control Switch including PVC outlet box, nuts, bolts and other accessories as required for complete installation.

6.3 Switched Socket Outlets

6.3.1 Measurement

Measurement shall be made for the number of each item acceptably supplied and installed by the Contractor as a complete unit.

6.3.2 Payment

Payment shall be made for the total number of units measured, as provided above, at the Contract unit price each and shall constitute full compensation for supplying, installing, connecting, testing and completion of each type and rating of the Switched Socket outlet including PVC outlet box, nuts, bolts and other accessories as required for complete installation.

6.4 Fan Controllers

6.4.1 Measurement

Measurement shall be made for the number of each item acceptably supplied and installed by the Contractor as a complete unit.

6.4.2 Payment

Payment shall be made for the total number of units measured, as provided above, at the Contract unit price each and shall constitute full compensation for supplying, installing, connecting, testing and completion of each type and rating of Fan Controller unit including PVC outlet box, nuts, bolts and other accessories as required for complete installation.

6.5 Light Dimmers

6.5.1 Measurement

Measurement shall be made for the number of each item acceptably supplied and installed by the Contractor as a complete unit.

6.5.2 Payment

Payment shall be made for the total number of units measured, as provided above, at the Contract unit price each and shall constitute full compensation for supplying, installing, connecting, testing and completion of each type and rating of Light Dimmer unit including PVC outlet box, nuts, bolts and other accessories as required for

complete installation.

SECTION - EARTHING
(AS APPLICABLE)

1.0 SCOPE OF WORK

The work under this section consists of supplying, installing, testing and commissioning of all material and accessories of the complete earthing system as specified herein, as shown on the Tender Drawings and given in the Bill of Quantities.

The Contractor shall discuss the electrical layout with the Engineer and Co-ordinate at Site with other services for exact route, location and position of the electrical lines and equipment.

The earthing system shall also comply with the General Specifications for Electrical Works Section-8001 and with other relevant provisions of the Tender Documents and latest WAPDA Specifications.

2.0 GENERAL

The earthing system consists of earth electrodes, earthing leads, earth connecting points, earth continuity conductors and all accessories necessary for the satisfactory operation of the associated electrical system.

3.0 APPLICABLE STANDARDS/CODES

The latest editions of following standards/codes shall be applicable for the materials in scope of this section:-

BS 951	-	Earthing Clamps
CP 1013	-	Earthing
BS 2874	-	Nuts, bolts, washers, screws & rivets fixing for use on Copper
BS 1433	-	Hard drawn bare copper conductor for earthing
BS 6346	-	PVC insulated cables

4.0 MATERIAL

Item 4.1 to 4.3 shall be selected as per design/drawings and BOQ of the projects.

4.1 Earth Electrode (Plate Type)

The earth electrode shall comprise a two feet x two feet and 1/8 inch thick electrolytic copper plate. The surface of the plate shall be tinned for protection. The plate shall have four terminals for connecting of the earthing leads. Nuts, bolts and washers, shall be either of brass or tinned copper.

4.2 Earth Electrode (Rod Type)

The earth electrode shall comprise ten feet long, 5/8 inch dia. copper deposited steel rod having flat head at drive end and pointed conical tip at the driven end. The tip shall be hardened to facilitate driving. At the top of the rod, a clamp for bolted connections shall be provided suitable for connection to the down conductor.

4.3 Earth Electrode (BoreType)

The earth electrode shall comprise of Tinned copper earth spike having dimension as show in the drawing. At the top of the pipe, a clamp for bolted connections shall be provided suitable for connection to the down conductor.

4.4 Earthing Lead

The earthing lead shall connect the earth electrode to earth connecting point and on the metallic part. It shall be round hard drawn bare electrolytic copper of size as shown on the Drawings.

4.5 Earth Continuity Conductor

Earth continuity conductor (ECC) shall be hard drawn bare copper wire or single core PVC insulated copper conductor cable of sizes indicated on the Drawings.

The specifications for single core PVC insulated or PVC/PVC cables used as ECC shall be same as those in relevant sections of Technical Specifications.

4.6 Earth Connecting Point

Earth connecting points shall comprise tinned copper bar, rectangular in shape, having dimensions of 350 x 50 x 6 mm. At least, six terminals for connection shall be arranged on the bar, which can be increased or decreased as required by the engineer.

The terminals shall have brass or tinned copper bolts, nuts and washers for protection against corrosion. Two holes shall be provided off centre of the copper bar for fixing to the wall by means of 10 mm dia. nut and bolt/ rawal bolt and shall be insulated by means of rubber gaskets/washers/ insulators.

5.0 INSTALLATION

5.1 General

Complete earthing systems as shown on the Drawing shall be installed by the Contractor. The earthing system shall have earth resistance, including the resistance of soil, earth leads and ECC preferably than **One(01)** ohm but not greater than three (03) ohm.

At all connections of earth continuity conductor to high mast or any other metallic body, proper size copper or brass sockets, thimbles or lugs shall be used to which the copper wire shall be connected by copper brazing. The soldering of copper wire at joints or terminations shall not be allowed. All tee-off connections shall be by copper brazing using suitable socket and clamps. After brazing, the jointed surface shall be protected by oxide inhibiting compound of low electrical resistance. For connections to metallic body, the surface shall be thoroughly cleaned before bolting the lug or socket.

The earth continuity conductor shall in general run in cable trench or in conduits/pipes as shown on the Drawings. For under floor runs, these shall be installed in pipe/conduit of appropriate sizes. Where laid along underground cables, these shall be laid directly underground in unpaved areas and in pipes under paved areas.

5.2 Earth Electrode (Plate Type)

The electrode plate shall be installed at a minimum depth of 15 feet from finished ground level or 3 feet below permanent water level whichever is less. The minimum horizontal distance between earth electrodes shall be 12 feet. Proper mixture of lime and charcoal shall be made and buried alongwith the copper plate in the ground to increase the soil conductivity. The earthing leads shall be installed in proper size G.I. pipes. The electrode shall be installed as per details shown on the Drawings. At the ground level an inspection chamber of cement concrete shall be constructed having dimensions as shown on the Drawings. The inspection chamber shall have a cover supported on angle iron frame. The cover shall be approved by the Engineer and shall finish flush with the ground level. At the ground level an inspection chamber of cement concrete shall be constructed having dimensions as shown on the Drawings. The inspection chamber shall have a cover supported on angle iron frame. The cover shall be approved by the Engineer and shall finish flush with the ground level. The earthing system shall be installed as per BOQ and drawings of the same.

5.3 Earth Electrode (Bore Type)

The earth electrode/spike shall be placed after bore at site. The bore shall be made upto permanent water level of 80 feet which ever is less. The earth electrode shall be connected to the earthing conductor of suitable size as shown in the drawings/BOQ. The earthing conductors shall be laid in a perforated GI pipe of suitable size.

In case the soil conditions at site permit, the earth electrodes may be installed by hammering the electrode in soil, until the top of the rod is about 12 inches

below the proposed ground level. If hammering down is not possible due to site conditions, a pit shall be first excavated in bare ground upto the required depth and electrode shall be installed upright in the pit. The excavated pit shall be backfilled in layers of 20 inches, each layer tamped and compacted. At the ground level an inspection chamber of cement concrete shall be constructed having dimensions as shown on the Drawings. The inspection chamber shall have a cover supported on angle iron frame. The cover shall be approved by the Engineer and shall finish flush with the ground level. The earthing system shall be installed as per BOQ and drawings of the same.

5.4 Earth Electrode (Rod Type)

In case the soil conditions at site permit, the earth electrodes may be installed by hammering the electrode in soil, until the top of the rod is about 12 inches below the proposed ground level. If hammering down is not possible due to site conditions, a pit shall be first excavated in bare ground upto the required depth and electrode shall be installed upright in the pit. The excavated pit shall be backfilled in layers of 20 inches, each layer tamped and compacted. At the ground level an inspection chamber of cement concrete shall be constructed having dimensions as shown on the Drawings. The inspection chamber shall have a cover supported on angle iron frame. The cover shall be approved by the Engineer and shall finish flush with the ground level. The earthing system shall be installed as per BOQ and drawings of the same.

5.5 Earth Continuity Conductor

The earth continuity conductor of sizes shown on the drawing shall be installed all along the cable runs and connected to the earthing bar/terminals provided in equipment. The body of all switchboards shall also be connected to earth by specified size of ECC. All other metal work shall also be connected to earth by specified size of ECC.

At any joint or terminations, the ECC shall be connected using proper accessories. No connection shall be made by twisting of earth conductors.

5.6 Earth Connecting Point

The earth connecting point shall be installed at locations shown on the drawings. It shall be fixed on wall surface by means of brass screws.

6.0 MEASUREMENT AND PAYMENT

6.1 General

The Contractor's bid amount against each Bill of Quantities item as given below shall include supplying, installation, testing and commissioning of all work specified herein, as shown on the Tender Drawing related to the item.

6.2 Earth Electrode

6.2.1 Measurement

Measurement shall be made for each type of earth electrode acceptably supplied and installed by the Contractor as a complete unit.

6.2.2 Payment

Payment shall be made for the total number of units measured, as provided above, at the Contract unit price each, and shall constitute full compensation for supplying, installing, testing, commissioning and completion of earth electrodes including earthing leads, excavation, backfilling, inspection chamber with cover, G.I. pipes for earthing leads, nuts, bolts, washers, lugs, brazing and all related civil works.

6.3 Earth Continuity Conductor

6.3.1 Measurement:

Measurement shall be made for the number of running feet for each size of earth continuity conductor (ECC) acceptably supplied, installed and tested by the Contractor.

6.3.2 Payment

Payment shall be made for the total number of running feet of each size of ECC measured, as provided above, at the Contract unit price each and shall include full compensation for supplying, installing, connecting, testing and completing of ECC including all accessories, such as sockets, thimbles, lugs, bolts, nuts, brazing etc.

6.4 Earth Connecting Point

6.4.1 Measurement

Measurement shall be made for each earth connecting point acceptably supplied and installed by the Contractor as a complete unit.

6.4.2 Payment

Payment shall be made for the total number of units measured, as provided above, at the contract unit price each and shall constitute full compensation for supplying, installing and completion of earth connecting point and all other associated accessories such as nuts, bolts, washers, lugs etc.

SECTION – 11: MEDIUM VOLTAGE SWITCHBOARD

1.0 SCOPE OF WORK

The work under this section consists of supplying, installation, testing & commissioning of all material and services of the complete Medium Voltage (MV) switchboards and accessories as specified herein or as shown on the tender drawings and given in the Bill of Quantities. The switchboard shall be got approved by WAPDA, before installation.

The Contractor shall discuss the electrical layout with the Engineer and coordinate at site with other services for exact location and position of the MV panel.

The MV Switchboard with accessories shall also comply with the WAPDA Specifications P-44: 96, General Specifications for Electrical Works Section-8001 and with other relevant provisions of the Tender Document.

2.0 GENERAL

The MV switchboard shall be sheet steel fabricated cubicle type totally enclosed type with IP classification IP44 dust tight and vermin proof. It shall be complete in all respect with material and accessories factory assembled, tested and finished according to the specifications and to the normal requirements.

The switchboard shall be suitable for front operation and shall:

- be suitable for addition of units on either side
- be provided with adequate clearance from live parts so that flashover cannot be caused by switching surges, vermin, pests, etc.
- be designed for flush mounting of all instruments on the front door
- have all incoming and out going connections from the bottom
- have the components mounted so as to facilitate ease of maintenance from the front
- have provision for lamp test, alarm test, alarm accept and reset facility
- be suitable for mounting on cable trenches
- be provided with anti-condensation heaters controlled automatically through adjustable thermostats for maintaining required safe operating temperature inside the panel and also avoid condensation. The heater shall also be manually operable and provided with protective miniature circuit breaker and **ON** indication lamp

3.0 APPLICABLE STANDARDS/CODES

Latest editions of the following standards and codes shall be applicable for the materials within the scope of this section.

BS 3245	-	Bus bars
BS 30	-	Meters
IEC 5	-	High voltage AC circuit breaker
IEC 185	-	Current transformers
IEC 186 BS 3941	-	Potential transformers

4.0 MATERIAL

4.1 Medium Voltage Switchboard

The switchboard shall be manufactured and fabricated with angle-iron framework, welded, grounded, finished and clad with 12 SWG sheet steel.

The switchboard shall be supplied divided into panels and compartments for accommodating the required number of circuit components, instruments and accessories.

The switchboard shall be supplied complete with foundation bolts and other installation materials as recommended by the manufacturer. Proper size cable clamping channels shall be provided for fixing required size of 15kV XLPE cable. Adequate number of eyebolts shall be provided to facilitate handling.

An earth bar of appropriate cross section shall be provided and connected to the body of all sections of the switchboard. The external earth terminal shall be provided for main earth connection. The doors shall be grounded by flexible strap of copper braids.

The control cabling inside the switchboard shall be suitably numbered and harnessed by means of straps or cords. All indicating, selecting and control equipment shall be suitably arranged and labeled with clear indelible printing, indicating the rating and designation of fuses, switches etc. The nameplates shall be provided on the front of panel for each circuit and component which is accessible from outside. The nameplates shall be of stainless steel with engraved equipment designation having minimum width of 5mm. Other labeling on the switchboard such as danger signs, voltage, switchboard/ panel identification shall be of sufficient size, legible from a distance of 10 meters.

All metal work of the switchboard shall be;

- cleaned down to bare shining metal
- De-rusted and de-greased
- Two base coats of anti-corrosive RED OXIDE paint.
- Finished inside and outside with Off White powder paint

Any interlocking if required inside the MV switchboard and between switchboard and other equipment should be provided.

4.1.1 Capacity and Basic Data

The switchboard shall be designed to conform to the following requirements;

Rated Current	:	As shown on drawings.
Rated Nominal Voltage	:	11 kV
Rated Maximum Voltage	:	15 kV
Power Frequency Withstand Voltage.	:	36 kV for 1 minute
Rated Short Circuit Capacity	:	450 MVA at 11 kV for one second.
Rated Breaking Currents (1 second rating)		
a. Symmetrical	:	18.4 kA
b. Asymmetrical	:	25 kA
Rated Making Current	:	2.55 times rated symmetrical Breaking current
Operating Duty	:	B-3 -MB-3 -MB
Impulse withstand Voltage	:	95 kV
Control Voltages		
Indication/Metering	:	110 Volt AC from secondary of PT

Tripping Voltage	:	Series tripping or 110 Volt DC from capacitor trip unit.

4.2 Circuit Breaker

The circuit breakers shall be triple pole, with drawable type with arc interruption in vacuum. The operating characteristics and technical data shall be as given in article 4.1.1 of this section. The bidder shall submit with his offer the type and details of equipment proposed.

The circuit breaker shall have trip free, direct acting and manually operated drive mechanism. For manual operation a handle shall be provided. The unit shall have roll-out trucks and channels for horizontal withdrawal. Interlocking device shall be provided such that the breaker can be closed only when it is in fully plugged-in or fully withdrawn position and withdrawal of circuit breaker is only possible in the open or isolated position. Safety shutters shall be provided which will automatically cover the live contacts as the circuit breaker is withdrawn. Other interlocks as essentially required for safe and proper operation of circuit breaker shall be provided. Barriers of approved heat resisting, non-tracking-insulating material shall separate the circuit breaker phases.

A triple pole grounding switch or a suitable earthing device shall be provided for cable and bus bar earthing and shall be rated to safely carry the fault current due to inadvertent closing of supply circuit breaker and also for making duty on a fault.

A triple pole grounding switch or a suitable earthing device shall be provided for cable and bus bars earthing, complete with mechanism for interlocking it with the circuit breaker and the roll-out truck and mechanical indication to show the position of grounding switch. The circuit breaker shall have automatic mechanically operated **ON** and **OFF** position indications. Luminous indications shall be provided with **ON/ OFF** and **TRIP** position. Additional indication lamps as shown on the drawings shall also be furnished. The circuit breakers shall be provided with **ON-OFF** push buttons.

Each circuit breaker shall be provided with at least three normally closed and three normally open potential free auxiliary contacts rated for 10 Amp. 230Volt AC. Provision shall be made for remote indication of the circuit breakers position/status.

A test circuit shall also be provided to facilitate testing operation of circuit breaker manually and by protective relays. Test socket with plug shall be provided for testing the relays.

The circuit breaker shall be complete with necessary secondary wiring with ferrules to indicate the circuit. Protection shall also be provided for all control

circuits.

4.3 Bus Bars

The bus bars shall be made of high conductivity electrolytic copper and shall be completely insulated and mechanically braced to safely withstand the stresses due to short-time momentary current under the fault conditions. The phase identification of bus bars shall be by the colors applied on the full length and these shall be red, yellow and blue. The clearances shall not be reduced on account of the busbar insulation or the phase barriers.

4.4 Current Transformers

Each circuit breaker shall be provided with current transformers having following ratings and characteristics:

Type	:	Cast resin
Number	:	Three single phase units
Burden	:	Suitable for load of protection and instrumentation circuits.
Accuracy	:	5% for protection and 1% for measuring with security factor 5.
Duty	:	For operating relays and instruments
CT ratio	:	As shown on the Tender Drawings
No. of cores	:	as required/as shown on drawings
Rated dynamic Current	:	2.55 times rated symmetrical short circuit current

4.5 Potential Transformers

Potential transformers (PTs shall be provided as shown on the Tender Drawings and having the following ratings and characteristics:

Type	:	Cast resin
Number	:	Three single phase units
Burden	:	Suitable for load of protection and

		instrumentation circuits.
Accuracy	:	Class 1.0
Duty	:	For operating relays and instruments. Each PT shall be designed to have independent secondary Windings of specified ratio for connection in star or open delta.
Voltage ratio	:	11kV/11Vs
Rated voltage factor	:	1.2 continuous and 1.0 for 30 seconds
Rated dynamic Current	:	2.55 times rated symmetrical short circuit current

4.6 Capacitor Shunt Trip Unit

In case series tripping is not provided then each circuit breaker in the MV switchboard shall be provided with 110 Volt DC trip coils, which will supply power through the capacitor trip units. The trip coils shall be fed through the relay contacts and the 'OFF' push button.

The capacitor trip unit will be fed from 110 volts secondary of potential transformer. The capacitor trip unit shall be suitable for performing two successive tripping operations carried out within five minutes.

4.7 Protective relays

The circuit breakers shall be provided with inverse definite minimum time non-directional over-current relays for phase and earth fault protection .The relays shall have the following common characteristics unless otherwise specifically mentioned:

Phase fault over current setting range:

Inverse	:	50-200 of CT secondary rating
Instantaneous	:	20-800 of CT secondary rating.

The instantaneous elements shall also have infinity setting to block their operation.

Ground-fault	:	20-80 of CT secondary rating with instantaneous element as for phase fault unit.

Time setting range	:	0-1 second
Connection	:	Secondary of CT
Auxiliary supply	:	Series tripping or through 110V

Tripping DC from capacitor trip units in each breaker panel.

Indications/control	:	110 Volt DC from secondary of PT.
Heaters and alarm	:	220 Volt DC from LV switchboard.
Auxiliary Contacts	:	Provision for remote indication as required

The relay shall preferably be triple pole type and have positive action without chatter.

4.8 Meters & Selector Switches

The meters to be provided on switchboard shall be as specified below:

4.8.1 Ammeter and Voltmeter

The ammeter and voltmeter shall be moving iron spring controlled having front dimensions of 144 x 144 mm. Voltmeters shall have measuring range of 0-15 kV and ammeters measuring range shall be as shown on the drawings. Ammeters and voltmeters shall conform to BSS accuracy class 1.5 and suitable for connection to the secondary of PTs and CTs installed on the switchboard.

4.8.2 Selector Switches

Ammeter selector switch shall be R-Y-B-OFF and voltmeter selector switch RY-YB-BR-OFF. The selector switches shall be complete with front plate and operating lever.

4.8.3 kWh and kVarh Meters

Kilowatt-hour (kWh) and Kilo volt ampere-hour (kVARh) meters shall be suitable for 3 phase 3 wire 50 cycles balanced and unbalanced loads. The kWh meter shall also be provided with maximum demand indicator and built in switch for operation as per WAPDA requirements.

4.8.4 Alarm Indication

On occurrence of any fault in the system and subsequent tripping of circuit breakers audio alarm shall be provided on the Switchboard. Push buttons shall

be provided on Panel for independent resetting of the audio alarm and fault-indicating lamp. At least two potential free contacts rated 10 Amp. AC or DC shall be available for remote connection.

4.9 Tools

One complete set of tools for routine operation setting and maintenance of MV switchboard including protective relays as recommended by manufacturer of each component shall be furnished within the price quoted for the MV switchboard. Switchboard shall be provided with independent set of tools placed in suitable box. The bidder shall furnish details of tools with his offer.

5.0 INSTALLATION

The MV switchboard shall be installed at location shown on the drawing. The cable trenches shall be constructed as part of civil works. The Contractor shall co-ordinate with the civil works for providing and openings, holes, etc., in time to avoid and breakage/damage to completed works. In case the provisions in civil works for installation of electrical equipment are not made or made incorrect, the same shall be rectified by the Contractor at his own cost and to the satisfaction and approval of Engineer.

The Contractor shall provide foundation bolts and grout them in cement concrete floor using non-shrinkable material approved by the Engineer. All installation materials for physically erecting the switchboard such as bolts, nuts, washers, supporting steel, etc. shall be provided and installed by the Contractor. The switchboard shall be installed upright and in level and shall be firmly and rigidly bolted on the floor and concrete supports. All wiring external from MV switchboard to alarm indication control unit protection interlock circuits and for auxiliary power supply for heaters, etc., will be furnished and installed by the Contractor in consultation with the Engineer.

The switchboard shall be erected as per manufacturer's instructions and as approved by the Engineer. Loose parts dispatched by the manufacturer shall be installed and connected as per assembly drawing provided by the manufacturer. And safety locking of meters relays, etc., provided by the manufacturer for safe transport shall be released only after the switchboard is erected in position.

Necessary provision shall be made in the MV switchboard for incoming/outgoing cables and installation of cable termination kits, keeping in view both cable and switchboard manufacturer's recommendations. The cable armour shall be connected to the earth system.

The switchboard body shall be connected to earth as per instructions given in section "Earthing” of these Specifications. The switchboard shall be tested and commissioned in the presence of the Engineer. The tests to be carried out shall be as recommended by the international standard to which the switchboard is manufactured and/or as recommended by manufacturer» but as a minimum the tests given in section "Testing” of these Specifications shall be carried out.

6.0 MEASUREMENT AND PAYMENT

6.1 General

The Contractor's bid amount against each Bill of Quantities item as given below shall include design supplying, installation, testing, commissioning and completion for all work specified herein and/or as shown on the Tender Drawing related to the item.

6.2 Medium Voltage Switchboard

6.2.1 Measurement

Measurement shall be made for the complete job of MV Switchboard including all mounting, installation and operational accessories acceptably supplied as a complete job.

6.2.2 Payment

Payment shall be made for the total number of jobs measured as provided above at the Contract unit price each and shall constitute full compensation for supplying, installation, testing and commissioning of the MV switchboard including all mounting, installation and operational accessories.

SECTION – 12:
LOW VOLTAGE SWITCHBOARDS, MAINTENANCE BY-PASS SWITCH, POWER FACTOR IMPROVEMENT PLANT AND BUS TIE DUCT

1.0 SCOPE OF WORK

The work under this section consists of design, manufacturing, fabricating, supplying, installing, testing, and commissioning of all material and services of the complete LV (LV) (415 Volt) switchboard, Maintenance By-Pass Switch (MBS), Power Factor Improvement (PFI) Plant and Bus Tie Duct (BTD) for indoor installation as specified herein, shown on the Tender Drawings and stated in the Bill of Quantities.

The Contractor shall discuss the electrical equipments and power & control cables layout with the Engineer and co-ordinate at site with other services for exact locations and positions of the electrical lines and equipments.

The LV (415 Volt) switchboards, MBS, PFI Plant and BTD with all other required accessories shall also comply with the General specifications for Electrical Works Section-8001 and with other relevant provisions of the Tender Documents.

2.0 GENERAL

2.1 Low Voltage (415 Volt) Switchboard

The LV (415 Volt) switchboard shall be sheet steel fabricated. The LV (415 Volt) switchboard shall be free standing cubicles on floor.

The free standing cubicles shall be modular in design with facility and provisions for expansion/ addition of additional cubicles in future

These shall be suitable for indoor installation on cable trenches. The LV (415 Volt) switchboard shall be totally enclosed, dust and damp proof. The LV (415 Volt) switchboard shall be complete in all respects with material and accessories, factory assembled, tested and finished according to the Specifications and to the normal requirements.

All components of LV (415 Volt) switchboards shall be installed on a common mounting plate inside the enclosure. The enclosures of LV (415 Volt) switchboards and Bus Tie Duct shall be provided with rubber gasket and a lockable hinged door with cam fastener. The switching lever of the Main incoming Air Circuit Breaker (ACB)/Moulded Case Circuit Breaker (MCCB) of LV (415 Volt) switchboards shall be accessible from outside of the panel doors in closed position. Switching levers of all outgoing MCCBs and MCBs shall only be accessible with the panel doors in open position.

The LV (415 Volt) switchboards shall be supplied complete with all installation materials as recommended by the manufacturer. The incoming and outgoing cable connections shall be according to the wiring requirements. If required, an adapter box for LV (415 Volt) switchboards to accommodate the cables and

conduits may be provided. The box shall be of the same material and finish as the switchboard.

The cabling inside the switchboard shall be suitably harnessed by means of straps or cords. For the LV (415 Volt) switchboards an earth bar or terminal strips shall be provided for connection of incoming and outgoing earth conductors. The earth bar or terminals shall be permanently connected to the body of switchboard at two points.

The LV (415 Volt) switchboards, in general, shall;

- be suitable for indoor installation & operation
- be suitable for operation and maintenance from front side
- be suitable for 415 Volt, 3 phase 4 wire, 50 Hz system
- have all components rated for insulation class of 600V min
- be designed for flush mounting of all instruments on the front
- be provided with adequate clearance from live parts so flash overs can not be caused by switching, vermin, pests, etc.
- have incoming/outgoing cable termination arrangements. The power cables shall be directly connected to the terminals of TP 500V MCCBs of current ratings of 100 Amps and above. The SP/TP MCBs and/or MCCBs of current ratings upto and including 100 Amps shall be connected to DIN rail mounted wiring terminals of appropriate ratings, numbers and sizes for the outgoing wiring cables
- be provided with name plate on the front side of door for each incoming/outgoing circuits
- be provided with pocket inside of door for safe keeping of the detailed as-built wiring/ shop diagrams of the switchboard
- have provisions for incoming and outgoing cables entry, connections and termination arrangements from top and/ or bottom plates as per site requirements
- have all openable doors grounded with the use of flexible copper cable/strip of 10 sq.mm cross-sectional area, at least

2.2 Maintenance By-Pass Switch (MBS)

The Maintenance by-pass switch shall be used for supply of power either from power transformer or DG set in case of faults in AMF Panel.

2.3 Power Factor Improvement (PFI) Plant

The Power factor Improvement Plant shall be used for improving the system power factor to keep the same within the limits as prescribed by WAPDA.

2.4 Low Voltage (415 Volt) Bus Tie Duct (BTD)

The LV (415 Volt) Bus Tie Duct shall be sheet steel fabricated. The LV (415 Volt) Bus Tie Duct shall be suitable for indoor installation. The Bus Tie Duct shall be suitable for indoor mounting on CC wall and RCC columns surfaces as shown on the drawings. The Bus Tie Duct shall be totally enclosed, dust and damp proof.

The Bus Tie Duct shall be designed to withstand a short circuit as specified for the associated LV switchboard. The current rating shall be as given in Bill of Quantities. The Bus-Tie Duct shall be three phase and neutral, rated for 415 Volt, 50 Hz system.

The LV (415 Volt) Bus Tie Duct shall be complete in all respects with material and accessories, factory assembled, tested and finished according to the Specifications and to the normal requirements.

The Contractor shall supply the bus-tie duct keeping in view all the installation, operation and maintenance factors as per site conditions and requirements and shall be solely responsible for the proper design configurations and dimensions of the bus-tie duct for complete alignment.

The LV (415 Volt) Bus Tie Duct, in general, shall;

- be suitable for indoor installation & operation
- be suitable for operation and maintenance from front/ rear sides
- be suitable for 415 Volt, 3 phase 4 wire, 50 Hz system
- have all components rated for insulation class of 600V min
- have name plates on the front & rear sides at every 5 meter
- have suitable provisions for incoming and outgoing cables entry, connections, termination arrangements as per site requirements
- have all openable doors grounded with the use of flexible copper cable/strip of atleast10 mm^2 cross-sectional area

3.0 APPLICABLE STANDARDS/CODES

The latest editions of the following standards and codes shall be applicable for the materials specified within the scope of this Section :

IEC 947	-	Triple pole Air Circuit Breakers
BS 4752-1	-	Triple pole Moulded Case Circuit Breaker
VDE 0641	-	Single and Triple pole Miniature Circuit IEC 947 Breaker

IEC 947	-	LV Switch gear and Control gear
IEC 439	-	Factory Built Assemblies of LV Switchgear
IEC 4752	-	Switch gear and control gear for Voltages upto and including 1 kV
BS 88	-	HRC Fuses
IEC 73	-	Colors for indicator lights and push buttons.
IEC 446	-	Identification of insulated/bare conductors

4.0 MATERIAL

4.1 Low Voltage (415 Volt) Switchboard

4.1.1 Sheet Metal Work

The enclosures for the LV (415 Volt) switchboards shall be fabricated with 14 SWG sheet steel. The front doors shall be fabricated with 12 SWG sheet steel.

The complete sheet steel metal work of the LV (415 Volt) switchboards shall be:

- cleaned down to bare shining metal
- de-rusted and de-greased
- painted with two base coats of anti-corrosive RED oxide paint.
- Two coats of weather proof powder paint in approved colour.

4.1.2 Components

The LV switchboard shall be provided with components as specified in these specifications, mentioned in the Bill of Quantities, as shown on the Tender Drawings required for the satisfactory operation of the switchboard and of the electrical system.

Typical component specifications are given below:-

4.1.2.1 Bus Bars

The bus bars shall be made of high conductivity electrolytic copper and shall be completely isolated and mechanically braced for the specified fault level. The phase identification of bus bars shall be by colours applied on bus bars and these shall be red, yellow and blue for phases and white for neutral. The earth bus bar shall be green.

The bus bars shall be triple pole and neutral and shall be of appropriate size to meet the electrical and mechanical requirements of the system. The temperature rise shall not exceed 45 degrees centigrade at rated current.

4.1.2.2 Moulded Case Circuit Breaker (MCCB)

The MCCB shall be moulded case, triple pole, rated for 415 Volt AC. The Operating current ratings and Rupturing capacities shall be as mentioned in the relevant items of the Bill of Quantities and as shown on the drawings. The MCCBs shall have fixed Magnetic Short circuit and fixed Thermal Overload protections. All incoming Triple pole circuit breakers shall be MCCBs.

The Moulded Case Circuit Breakers shall be installed in the LV switchboards such that the Switching levers of Main Incoming MCCB and all outgoing MCCBs and MCBs shall be accessible from inside the front of the panel with the front door in closed position. Circuit numbers and designation on all circuits shall be clearly marked to facilitate connection and maintenance.

4.1.2.3 Miniature Circuit Breaker (MCB)

The MCBs shall be Single pole 250 Volt and Triple pole 415 Volt of current ratings as shown on the drawings. These shall have fixed magnetic short circuit and fixed thermal overload protections. The Single pole and Triple pole miniature circuit breakers shall have a 10,000 Amperes short circuit breaking capacity as per International standards IEC 157 Category P2.

The Miniature Circuit Breakers shall be installed such that their switching levers are accessible through the front plate inside the switchboards for operations. Circuit Numbers and Designation on all circuits shall be clearly marked to facilitate connection and maintenance. These Circuit Breakers shall be suitable for working on lighting and power circuits.

4.1.2.4 Air Break Magnetic Contactors

The contactors shall be air break, triple pole, 415 Volt suitable for the type of duty to be performed. The main contacts shall be silver tipped, butt type with double break per pole. Each contactor shall be provided with 230 Volt, AC single phase operating coil, and minimum two normally open (NO) and two normally closed (NC) auxiliary contacts wired upto terminals. The number of working auxiliary contacts shall be provided according to the system requirements.

4.1.2.5 Push Buttons

Push buttons shall be momentary make break contact type (normally

open/normally close). These shall be suitable for flush mounting on switchboard, plastic faceplate etc. Push buttons shall have round/square head. These shall be of red color for 'ON' and green color for 'OFF' operations.

4.1.2.6 **AC Voltmeters**

AC Voltmeters shall be digital type and shall be suitable for flush mounting on front door of the switchboards. The front dimensions shall be 96 mm Wide and 48 mm high. The voltmeters shall have 3-1/2 digit, 0.55-inch display. The AC digital voltmeters shall have measuring range of 0 to 1999 Volt AC. It shall be suitable for power supply of 110/220 Volt AC ±10% at 50/60 HZ.

4.1.2.7 **Ammeters**

AC Ammeters shall be digital type and shall be suitable for flush mounting on front door of the switchboards. The front dimensions shall be 96 mm wide and 48 mm high. The Ampere meters shall have 3-1/2 digit, 0.55-inch display. The AC digital voltmeters shall have measuring ranges as shown on the drawing and given in the Bill of Quantities. It shall be suitable for power supply of 110/220 Volt AC ±10% at 50/60 Hz.

4.1.2.8 **Voltmeter Selector Switch**

The voltmeter selector switch shall be complete with front plate, grip handle, and RY-YB-BR-OFF-RN positions.

4.1.2.9 **Ampere meter Selector Switch**

The ampere meter selector switch shall be complete with front plate, grip handle, and R-Y-B-OFF positions.

4.1.2.10 **Indicating Lamps**

Indicating lamps shall be suitable for flush mounting, complete with base, 230-Volt neon lamp and shall have rosettes of suitable colour.

4.1.2.11 **Current Transformers**

Air-cooled, ring type current transformers shall be provided having transformation ratio as indicated on the drawings. The current transformers shall be of suitable burden having accuracy class 1.0 and have 5 amps secondary.

4.1.2.12 **Line up Terminals**

Line up terminals wherever provided for control of lighting, power and control circuits shall be suitable for voltage and size of conductors

as indicated on drawings and as mentioned in the respective BOQ items. The line-up terminals shall be suitable for channel mounting. All necessary accessories such as end-plates, fixing clips, transparent label holder caps and label sheets with marking shall be provided.

4.2 Low Voltage (415 Volt) Bus Tie Duct

4.2.1 Sheet Metal Work

The complete enclosures for the LV (415 Volt) Bus Tie Duct shall be fabricated with 14 SWG sheet steel.

The complete sheet steel metal work of the LV (415 Volt) Bus Tie Duct shall be:

- cleaned down to bare shining metal
- de-rusted and de-greased
- painted with two base coats of anti-corrosive RED oxide paint.
- Two coats of weather proof powder paint in approved colour.

4.2.2 Components

The LV Bus Tie Duct shall be provided with components as specified in these specifications, mentioned in the Bill of Quantities, as shown on the Tender Drawings required for the satisfactory operation of the Bus Tie Duct and of the electrical system.

Typical component specifications are given below:-

4.2.2.1 Bus Bars

The bus bars shall be made of high conductivity electrolytic copper and shall be completely isolated and mechanically braced for the specified fault level. The phase identification of bus bars shall be by colours applied on bus bars and these shall be red, yellow and blue for phases and white for neutral. The earth bus bar shall be painted green.

The bus bars shall be triple pole and neutral and shall be of appropriate size to meet the electrical and mechanical requirements of the system. The temperature rise shall not exceed 45 degrees centigrade at rated current.

4.2.2.2 Insulators

The insulators for mounting of Busbars shall be suitable for 3 phase, 4 wire, 415 Volt AC operation as shown on the drawings.

4.2.2.3 Insulating supports

The insulating supports for mounting of busbars inside the sheet steel enclosure shall be of suitable material and thickness to provide the required insulation. These shall also be suitable to withstand the physical weights of the busbars.

4.2.2.4 Nuts, Bolts and Washers

The nuts, bolts and washers for the Bus Tie Duct shall be made of galvanized steel suitable for long life operation.

4.3 Power Factor Improvement (PFI) Plant

4.3.1 Sheet Metal Work

The complete enclosures for the Power Factor Improvement Plant shall be fabricated with 14 SWG sheet steel.

The complete sheet steel metal work of the Power Factor Improvement Plant shall be:

- cleaned down to bare shining metal
- de-rusted and de-greased
- painted with two base coats of anti-corrosive RED oxide paint
- Two coats of weather proof powder paint in approved colour

4.3.2 Components

The Power Factor Improvement Plant shall be provided with components as specified in these specifications, mentioned in the Bill of Quantities, as shown on the Tender Drawings required for the satisfactory operation of the Power Factor Improvement Plant and of the electrical system.

Typical component specifications are given below:

4.3.2.1 Bus Bars

The bus bars shall be made of high conductivity electrolytic copper and shall be completely isolated and mechanically braced for the specified fault level. The phase identification of bus bars shall be by colours applied on bus bars and these shall be red, yellow and blue for phases and white for neutral. The earth bus bar shall be painted green.

The bus bars shall be triple pole and neutral and shall be of appropriate size to meet the electrical and mechanical requirements of the system.

The temperature rise shall not exceed 45 degrees centigrade at rated current.

4.3.2.2 Insulators

The insulators for mounting of busbars shall be suitable for 3 phase, 4 wire, 415 Volt AC operation as shown on the drawings.

4.3.2.3 Insulating supports

The insulating supports for mounting of busbars inside the sheet steel enclosure shall be of suitable material and thickness to provide the required insulation. These shall also be suitable to withstand the physical weights of the busbars.

4.3.2.4 Nuts, Bolts and Washers

The nuts, bolts and washers for the Bus Tie Duct shall be made of galvanized steel suitable for long life operation.

4.3.2.5 Power Factor Regulator

The Power Factor Regulator shall be suitable for sensing power factor in a Three Phase unbalanced load network. The Power Factor meter shall be digital. The regulator shall have provision for Automatic cum Manual operation. The operating voltage shall be same as that for the associated LV switchboard.

The Power Factor Regulator shall be microprocessor controlled for fast computer programming at site. It shall have provisions for sensing connection errors.

4.4 Maintenance By-Pass Switch (MBS)

4.4.1 Sheet Metal Work

The complete enclosures for the Maintenance By-Pass Switch shall be fabricated with 14 SWG sheet steel.

The complete sheet steel metal work of the Maintenance By-Pass Switch shall be:

- cleaned down to bare shining metal
- de-rusted and de-greased
- painted with two base coats of anti-corrosive RED oxide paint
- Two coats of powder paint in approved colour

4.4.2 Components

The Maintenance By-Pass Switch shall be provided with components as specified in these specifications, mentioned in the Bill of Quantities, as shown on the Tender Drawings required for the satisfactory operation of the Maintenance By-Pass Switch and of the electrical system.

Typical component specifications are given below:

4.4.2.1 Bus Bars

The bus bars shall be made of high conductivity electrolytic copper and shall be completely isolated and mechanically braced for the specified fault level. The phase identification of bus bars shall be by colours applied on bus bars and these shall be red, yellow and blue for phases and white for neutral. The earth bus bar shall be painted green.

The bus bars shall be triple pole and neutral and shall be of appropriate size to meet the electrical and mechanical requirements of the system. The temperature rise shall not exceed 45 degrees centigrade at rated current.

4.4.2.2 Insulators

The insulators for mounting of Busbars shall be suitable for 3 phase, 4 wire, 415 Volt AC operation as shown on the drawings.

4.4.2.3 Insulating supports

The insulating supports for mounting of busbars inside the sheet steel enclosure shall be of suitable material and thickness to provide the required insulation. These shall also be suitable to withstand the physical weights of the busbars.

4.4.2.4 Nuts, Bolts and Washers

The nuts, bolts and washers for the Bus Tie Duct shall be made of galvanized steel suitable for long life operation.

4.4.2.5 Air Break Magnetic Contactors

The contactors shall be air break, triple pole, 415 Volt suitable for the type of duty to be performed. The main contacts shall be silver tipped, butt type with double break per pole. Each contactor shall be provided with 230 Volt AC single phase operating coil, and minimum two normally open (NO) and two normally closed (NC) auxiliary contacts wired upto terminals. The number of working auxiliary contacts shall be provided according to the system requirements.

4.4.2.6 AC Voltmeters

AC Voltmeters shall be digital type and shall be suitable for flush mounting on front door of the switchboards. The front dimensions shall be 96 mm Wide and 48 mm high. The voltmeters shall have 3-1/2 digit, 0.55-inch display. The AC digital voltmeters shall have measuring range of 0 to 1999 Volt AC. It shall be suitable for power supply of 110/220 Volt AC ±10% at 50/60 HZ.

4.4.2.7 Voltmeter Selector Switch

The voltmeter selector switch shall be complete with front plate, grip handle, and RY-YB-BR-OFF-RN positions.

4.4.2.8 Indicating Lamps

Indicating lamps shall be suitable for flush mounting, complete with base, 230-volt neon lamp and shall have rosettes of suitable colour.

4.4.2.9 Line up Terminals

Line up terminals wherever provided for control of lighting, power and control circuits shall be suitable for voltage and size of conductors as indicated on drawings and as mentioned in the respective BOQ items. The line-up terminals shall be suitable for channel mounting. All necessary accessories such as end-plates, fixing clips, transparent label holder caps and label sheets with marking shall be provided.

5.0 INSTALLATION

5.1 Low Voltage (415 Volt) Switchboard

The location of LV switchboards is shown diagrammatically on the drawings. The actual location shall be determined at site, keeping in view the site conditions and in coordination with other equipment.

LV switchboard for floor mounting shall be installed on already prepared CC cable trenches. The LV switchboards shall be protected to avoid any damage due to the civil work.

All loose parts dispatched separately with the switchboard shall be installed as per manufacturer instructions and all adjustments or setting shall be made as required. All screws, nuts and bolts used for fixing the switchboard shall be galvanized.

The switchboards installation shall include connecting all incoming and outgoing cables. The cable entry in the boards shall be provided from top or bottom as required.

The switchboard body shall be connected to earth as per instructions given in section "Earthing" of these Specifications. The switchboard shall be tested and commissioned in the presence of the Engineer. The LV switchboards shall be tested before energizing as per instructions contained in the article "Testing" of General Specifications for Electrical Works, Section-8001 of these Specifications.

5.2 Low Voltage (415 Volt) Bus Tie Duct (BTD)

The Bus-Tie Duct shall be installed at the locations as shown on the drawings. All installation materials steel hangers brackets supports etc. as required and recommended by the manufacturer for safe erection shall be provided and installed by the Contractor without any additional cost. The bus tie duct shall be carefully aligned and all steel supports made of bolted connections using nuts bolts washers etc. shall be provided by the Contractor. All material and accessories shall be galvanized /rustproof. The section of copper bars of the bus tie duct requiring bolting together shall be thoroughly cleaned at site. A coat of conductive oxide inhibitor compound to be applied on the surface to be connected and the sections bolted together by means of torque wrenches using the bolts provided by the manufacturer. The bus tie duct shall be tested and commissioned in the presence of the Engineer or his representative at the manufacturer's works. After successful completion of tests the contractor shall furnish Test certificates. The bus tie duct shall be tested at site before energizing as per article “Testing” Section - 8001 of these Specifications.

5.3 Power Factor Improvement (PFI) Plant

The location of Power Factor Improvement Plant is shown diagrammatically on the drawings. The actual location shall be determined at site, keeping in view the site conditions and in coordination with other equipment.

Power Factor Improvement Plant shall be installed on already prepared CC cable trenches. The Power Factor Improvement Plant shall be protected to avoid any damage due to the civil work.

All loose parts dispatched separately with the Power Factor Improvement Plant shall be installed as per manufacturer instructions and all adjustments or setting shall be made as required. All screws nuts and bolts used for fixing the Power Factor Improvement Plant shall be galvanized.
The Power Factor Improvement Plant body shall be connected to earth as per instructions given in section "Earthing" of these Specifications.

The Power Factor Improvement Plant shall be tested and commissioned in the presence of the Engineer. The Power Factor Improvement Plant shall be tested before energizing as per instructions contained in the article "Testing" of General Specifications for Electrical Works, Section-8001 of these Specifications.

5.4 Maintenance By-Pass Switch (MBS)

The location of Maintenance By-Pass Switch is shown diagrammatically on the drawings. The actual location shall be determined at site, keeping in view the site conditions and in coordination with other equipment.

Maintenance By-Pass Switch shall be installed on already prepared CC cable trenches. The Maintenance By-Pass Switch shall be protected to avoid any damage due to the civil work.

All loose parts dispatched separately with the Maintenance By-Pass Switch shall be installed as per manufacturer instructions and all adjustments or setting shall be made as required. All screws, nuts and bolts used for fixing the Maintenance By-Pass Switch shall be galvanized.

The Maintenance By-Pass Switch installation shall include connecting all incoming and outgoing cables.

The Maintenance By-Pass Switch body shall be connected to earth as per instructions given in section "Earthing" of these Specifications. The Maintenance By-Pass Switch shall be tested and commissioned in the presence of the Engineer. The Maintenance By-Pass Switch shall be tested before energizing as per instructions contained in the article "Testing" of General Specifications for Electrical Works (Section-8001).

6.0 MEASUREMENT AND PAYMENT

6.1 General

The Contractor's bid amount against each item of Bill of Quantities as given below shall include design, fabrication, supply, installation, testing, commissioning and completion for all works specified herein and/or as shown on the Tender Drawing related to the item.

6.2 Low Voltage Switchboard

6.2.1 Measurement

Measurement shall be made for the number of each type/ designations of LV switchboards acceptably supplied, installed, tested and commissioned by the Contractor as a complete job.

6.2.2 Payment

Payment shall be made for the number of each type/designations of jobs measured, as provided above, at the Contract unit price each for design, fabricating, supplying, installing, testing, and commissioning of the LV switchboards, including fixing arrangement and accessories for complete installation.

6.3 Low Voltage Bus-Tie Duct

6.3.1 Measurement

Measurement shall be made for the running meters of each type of LV bus-tie duct acceptably supplied, installed, tested and commissioned by the Contractor as a complete unit.

6.3.2 Payment

Payment shall be make for the number of running meters of each type of units measured as provided above at the Contract unit prices each. The payment shall constitute full compensation for supplying, installing, connecting, testing, commissioning and completion of the LV Bus Tie Duct including all installation materials such as hangers, brackets, supports, nuts, bolts, washers, sheet steel covers, ECC etc.

6.4 Power Factor Improvement Plant

6.4.1 Measurement

Measurement shall be made for the number of each type/ designations of Power Factor Improvement Plant acceptably supplied, installed, tested and commissioned by the Contractor as a complete job.

6.4.2 Payment

Payment shall be made for the number of each type/designations of jobs measured, as provided above, at the Contract unit price each for design, fabricating, supplying, installing, testing, and commissioning of the Power Factor Improvement Plant, including fixing arrangement and accessories for complete installation.

6.5 Maintenance By-Pass Switch

6.5.1 Measurement

Measurement shall be made for the number of each type/ designations of Maintenance By-Pass Switch acceptably supplied, installed, tested and commissioned by the Contractor as a complete job.

6.5.2 Payment

Payment shall be made for the number of each type/designations of jobs measured, as provided above, at the Contract unit price each for design, fabricating, supplying, installing, testing, and commissioning of the Maintenance By-Pass Switch, including fixing arrangement and accessories for complete installation.

SECTION – 13: MISCELLANEOUS ITEMS

1.0 SCOPE OF WORK

The work under this section consists of supplying, installing, testing and commissioning of all material and accessories for Miscellaneous Items as specified herein and/or shown on the drawings and given in the Bill of Quantities.

The Contractor shall discuss the electrical layout with the Engineer and co-ordinate at site with other services for exact locations and positions of the Miscellaneous Items.

The Miscellaneous Items with accessories shall also comply with the General Specifications for Electrical Works Section - 8001 and with other relevant provisions of the Tender Document and latest WAPDA Specifications.

2.0 GENERAL

The miscellaneous items as described in this section shall comply with other sections of these specifications as applicable. No specific reference to any manufacturer has been made and the Contractor shall ensure that all the miscellaneous items be supplied/fabricated from the reputable manufacturers, who have already supplied/fabricated similar items.

3.0 APPLICABLE STANDARDS/CODES

The latest editions of the following standards/codes shall be applicable to the material specified within the scope of this Section:

BS 4934	-	Safety requirements for electric fans and regulators.
BS 5060	-	Performance of circulating fans and their regulators.
BS 4752	-	Switchgear & controlgear for voltages upto 1000 volt.
IEC 439	-	Factory built assemblies of LV switchgear & controlgear.

4.0 MATERIAL

4.1 MCB/MCCB Enclosed in Sheet Steel Box

The single pole 250 volts and triple pole 500 volts moulded case circuit breakers (MCCB) are used for supplying single phase/three phase power to the equipment shown on the drawings and given in the Bill of Quantities.

The MCCB shall conform to the same specifications as given in section LV distribution boards of these specifications. It shall be installed in a 14 SWG sheet steel box of such a size which can easily accommodate the MCCB and incoming/outgoing wires or cables. Sufficient numbers of PVC connectors

shall also be provided inside the sheet steel box for terminating the earth continuity conductors and neutral wires. The front plate fixed on the sheet steel box shall be of sheet steel fixed with G.I. screws having an opening for operating the ON-OFF lever of MCCB.

4.2 Ceiling Fan

Ceiling fan shall be capacitor type, suitable for 250 Volt AC. The air displacement shall be 12,000 cfm for 56" (1422 mm) sweep and 10,000 cfm for 48" (1219 mm) sweep at maximum speed. The fan motor shall be capacitor type and bearing shall be groove type to give noiseless operation.

The down rod of ceiling fans shall be appropriate length such that the ceiling fan motor and blades are minimum 12 inches below false ceiling.

4.3 Ceiling Hook for fan

The fan hook shall be made of 16 mm diameter mild steel rod. It should be in the form of a loop about 75 mm long and about 50 mm wide. The rod should be bent to have at least 200 mm extension on both sides for tying to reinforcement steel of slab. The fan shall be deluxe model, of any reputable make.

4.4 Wall Bracket Fan

Fan motor shall be capacitor type and bearing shall be groove type to give noiseless operation. The fan regulator shall be built-in type with high grade steel laminations and shall have five speed marks and one "OFF" mark. The fan shall be finished in white colour matching the ceiling and shall be of any reputable make.

4.5 Exhaust Fans

Exhaust fans shall be of plastic body and blades. The 6" dia fans shall have circular frame suitable for fixing in window glass. It shall have a card control shutter. The 9" and 12" exhaust fans shall have square shaped plastic body and blades. It shall be suitable for installation in wall openings. The fan shall have a card switch for reversible operation.

5.0 INSTALLATION

5.1 General

The mounting heights of all the miscellaneous items are stated on the drawings or in general notes. In case the mounting height is not mentioned, the instructions of the Engineer shall be obtained before fixing the item.

5.2 MCB/MCCB Enclosed in Sheet Steel Box

The miniature/moulded case circuit breakers (MCB/MCCB) shall be installed on 1.63 mm (16 SWG) thick sheet steel box with screws or some suitable arrangements as approved by Engineer. White face plate for sheet steel box shall be fixed by means of flat head galvanized screws sunk in the plastic plate so as to finish flush with the wall surface. The edges of the plate shall be chamfered.

5.3 Ceiling Fan

Fan hook shall be installed in the RCC ceiling and to the reinforcement before pouring of concrete. The installation of fan shall include fixing of blades, down-rod, clamp, canopy, including testing and commissioning.

The down rod shall be of required length having long threads and shall be provided with check nuts to secure it firmly with the clamp and with the body of the fan. A split pin shall be provided both at the fan body end and at the clamp for safety. Any scratches on the body of the fan or fan rod appearing during installation shall be cleaned and painted properly with the same quality paint as provided by the manufacturer.

Wiring between the ceiling rose and the fan terminals shall be three core 1.5 .mm^2 PVC insulated, PVC sheathed flexible cable.

5.4 Wall Bracket Fan

Wall bracket fan shall be installed on wall at locations shown on the drawings as per manufacturer's recommendations. Wiring between wall fan point and fan shall be with 3 core 1.5 mm^2 PVC insulated, PVC sheathed flexible cable.

5.5 Exhaust Fans

The exhaust fans shall be installed in window glass or in wall openings as required.

6.0 MEASUREMENT AND PAYMENT

6.1 General

The Contractor's bid amount against each Bill of Quantities item as given below shall include supply, installation, testing, commissioning and completion for all work specified herein, as shown on the Tender Drawings and given in the Bill of Quantities related to the item.

6.2 MCB/MCCB Enclosed in Sheet Steel

6.2.1 Measurement

Measurement shall be made for the number of each item acceptably supplied and installed by the Contractor as a complete unit.

6.2.2 Payment

Payment shall be made for the number of units measured as provided above at the Contract unit price each and shall constitute full compensation for supplying, installing, connecting, testing and completion of each item including sheet steel outlet box, plate and accessories as required.

6.3 Ceiling Fans

6.3.1 Measurement

Measurement shall be made for each type of Ceiling fan & accessories acceptably supplied and installed by the Contractor as a complete unit.

6.3.2 Payment

Payment shall be made for the number of units measured as provided above at the Contract unit price each and shall constitute full compensation for supplying, installing, connecting, testing and commissioning of Ceiling fans including mounting, accessories such as nuts, bolts, hooks, down rod of appropriate length etc., and wiring between ceiling rose and fan terminals complete in all respects.

6.3 Wall Bracket Fans

6.3.1 Measurement

Measurement shall be made for each type of wall Bracket fan & accessories acceptably supplied and installed by the Contractor as a complete unit.

6.3.2 Payment

Payment shall be made for the number of units measured as provided above at the Contract unit price each and shall constitute full compensation for supplying, installing, connecting, testing and commissioning of wall Bracket fans including mounting, accessories such as nuts, bolts, hooks, etc., and wiring between ceiling rose and fan terminals complete in all respects.

6.3 Exhaust Fans

6.3.1 Measurement

Measurement shall be made for each type of Exhaust fan & accessories acceptably supplied and installed by the Contractor as a complete unit.

6.3.2 **Payment**

Payment shall be made for the number of units measured as provided above at the Contract unit price each and shall constitute full compensation for supplying, installing, connecting, testing and commissioning of Exhaust fans including mounting, accessories such as nuts, bolts, etc., and wiring between ceiling rose and fan terminals complete in all respects.

c

SECTION – 14: TELEPHONE SYSTEM

1.0 SCOPE OF WORK

The work under this section consists of design, manufacturing, fabricating, supplying, installing, testing, energizing, operation and commissioning of all material and services for the complete proposed Telephone system as specified herein, as shown on Tender Drawings and stated in the Bill of Quantities and as directed by the Engineer. The system shall fully comply with the general requirements for telephone system as specified by the Pakistan Telecommunication Corporation Limited (PTCL).

The Contractor shall discuss the layout of the proposed Telephone system with the Engineer and co-ordinate at site with other services/ systems for exact route, location and position of various equipments of the proposed system.

The proposed Telephone system with accessories shall also comply with the General Specifications for Electrical Works Section - 8001 and with other relevant provisions of the Tender Document.

2.0 GENERAL

The Telephone System is intended to establish efficient communication. The Telephone system shall be suitable for making local, long distance and overseas calls.

The Digital telephone exchange shall be modular in design. The system shall have facility for expansion of Trunk lines and extensions in future.

The complete Telephone system equipment shall be fully electronic, state of the art design with elegant finish.

The proposed Telephone System shall comprise the following equipments but not limited to;

- Main Distribution Frame
- Main Telephone Junction Box
- Digital Telephone exchange
- Mains power supply system
- Back-up power supply system
- Digital Telephone sets
- All required accessories

The Contractor shall provide all equipment including concealed conduits and multi-core, 0.6 mm dia., tinned copper conductor cable, for complete proposed telephone system as per Bill of Quantities, as shown on the drawings, as explained in these specifications and as directed by the Engineer.

The Contractor shall also provide any other equipment and materials, which are deemed necessary for the completion of system, without any extra cost.

3.0 APPLICABLE STANDARDS / CODES

The latest editions of the following standards / codes shall be applicable for the materials covered within the scope of this section:

BS 7640	-	Telephone cables
VDE 0816		
IEC 189		
BS 6360		
DIN 40040	-	Class & Reliability of units in Telecommunication
DIN 5800	-	Regulations for installation & operation of Telecommunication
CCITT	-	Recommendations and local T&T regulations.

4.0 MATERIAL

4.1 Digital Telephone Exchange (EPABX)

The EPABX shall be state-of-the-art, digital, non-blocking type utilizing Pulse Code Modulation (PCM) and Time Division Multiplexing (TDM) and Stored program Control (SPC). It must be field proven and conform to ITU-T A-Law Companding standard. It shall initially be equipped with 1000 subscriber lines and 100 trunk lines. The system shall allow simultaneous voice and data communication over one twisted pair telephone cable. The system shall be capable of connecting telefax and teletext etc.

The system shall be able to operate in the following environmental operating conditions:

Temperature	:	0 to 50° C
Humidity	:	5 to 95 %

The various types of interface circuits required are as follows:

Analogue Extension	:	Two wire Dual Tone Multi-frequency (DTMF) according to ITU-T Q.23
Analogue Trunk	:	In accordance with PTC standard
Digital, Trunk	:	2 Mbit/sec (comprising 100 digital trunks)

Extensive and adjustable time-out facilities shall be available in the EPABX to enable the time-out and release in the following cases:

- when a call is not answered within a pre-defined time period

- when during dialing, the inter-digit time period is exceeded

- when an incomplete or invalid number id dialed

- when an extension attempts to access a feature it is not allowed

The EPABX system shall incorporate a wide range of self-initiating diagnostic routines for the monitoring of system performance and identification of errors.

The proposed EPABX should be configured to handle the following traffic:

0.35 Erlangs per each extension
0.90 Erlangs per each trunk
Blocking of calls: less than one percent.

The Contractor shall state the maximum number of simultaneous calls possible within the exchange.

An adequate range of alarm and test facilities shall be provided in the EPABX to enable the maintenance personnel to rapidly access and localize the fault conditions. The facility of remote access (via dialup modem) of the EPABX for operation and maintenance purposes shall be available.

The system shall also contain appropriate hardware and software for audible and visual display of the whole range of alarms from the EPABX equipment to enable the maintenance personnel to undertake corrective action immediately upon occurrence of the fault. It should be possible to carry out the fault diagnosis and rectification without interruption in the service.

The system shall operate on single-phase 230 Volt 50Hz supply. Power supply of the system shall be based on modular components and shall use low power dissipation. The system shall operate without the need of forced cooling. Backup batteries shall be of sufficient size to keep the system fully operational in case of power failure for one hour.

The EPABX system shall comply to the following interfaces and protocols:

- EURO ISDN BRI & PRI
- ITR6
- Q.931
- QSIG
- DPNSS
- CCS
- V.24/V.25/28/35
- LAP-D

4.2 Main Distribution Frame

The termination equipment for the trunk and extensions circuits shall be wall-mounted type. It shall be sized to accommodate all internal and external circuits plus a twenty percent spare capacity. The connecting blocks will be of the quick-connect type. Each of the trunk circuits and outside cable pairs will be protected with over-voltage and over-current protectors. These protectors shall be either carbon or gas tube type.

Complete details of the distribution frames together with the over-voltage/over-current protection shall be provided as part of the Contactor's proposal.

4.3 Power Supply

In the equipment room, the mains supply provided by WAPDA shall be available. The mains voltage (230 Volt AC/50Hz) will be subject to possible fluctuations and variations normally encountered in the WAPDA power supply network.

The Contractor shall be solely responsible to ensure that its proposed equipment is designed to function from the WAPDA mains voltage and will provide all necessary power supply equipment i.e. rectifiers, chargers, batteries and accessories to ensure a complete and fully functional primary and standby power supply system.

As reserve power, the equipment shall be equipped wit a 48 Volt DC reserve system, to provide system operation in the event of a commercial power failure or fault in the primary rectifier. The battery shall be designed to provide a maximum of eight (8) hours reserve power for the ultimate size of the EPABX. The batteries shall be of sealed maintenance free type, supplied complete with cells, connectors, stand and all accessories. The batteries will be so arranged so that they take over the system automatically upon the failure of the primary power supply system.

Complete details of the power supply system shall be included as part of the contract.

4.4 Telephone Sets

a) Standard Telephone Sets

The standard telephone sets shall be a single–line pushbutton telephone set. The keypad and dialing from the telephone set must conform to the ITU-T Q23 standard. It shall be equipped with a voice level volume control and a ringing signal volume control. It shall be possible to

attach a hands free unit if required. The colour of the telephone set must be approved by the Engineer in consultation with the Employer.

b) Executive Telephone Sets

The EPABX shall have the provision to connect 2-channel digital phones. The digital telephone sets of the EPABX shall not require any external power source e.g. 230 Volt AC or batteries and should be able to operate through loop-power.

All programming of the digital sets shall be done in the switch and if a digital set is replaced, there should not be any need for feeding the individual set data again. The range of digital extensions should be expendable. The maximum range shall be specifies by the supplier. It should also operate on single pair standard telephone cable.

The digital phones should have the following features:

2-Channel desktop telephone with;

- 12 Key key-pad
- 12 function keys with LEDs
- Plus/minus Keys for volume control
- Indications for incoming calls: calling party's number/name (internal)
- LCD display – 24 digit alpha–numeric display
- Date/time indication on the LCD display
- Intelligent dialog key control for function selection in the display by scrolling in the menu and selecting the desired function
- Open listing
- Hands free talking
- Options to connect additional function keys with LEDs. It should be possible to program these keys for EPABX features or internal/external numbers

4.5 Auto-Attendant System

The EPABX will be equipped with an auto-attendant system comprising a PC with Voice Mail Software. All incoming calls to the EPABX will be first routed to the Auto-attendant system. The system will provide recorded instructions to the incoming caller about the various possibilities of connection to the required extension (e.g. self-dialing of extension or routing to the attendant console). The incoming caller will therefore, be able to either dial the required extension number or will be routed to the attendant console.

4.6 Call Accounting and Billing System

The EPABX will incorporate specialized hardware and software to perform the following functions:

a) Recording of Call Data

Provision shall be provided for recording of following minimum parameters:

- Calling party: operator, trunk group and trunk line
- Called party: group & line of outgoing trunk
- User group code
- Cost-center code
- Start date and time
- Duration and number of meter pulses.

The timing of the call will start upon the answer of the called extension and <u>not</u> upon the time of commencement of dialing the called number.

b) Billing Reports

The raw data obtained in the preceding paragraph will be processed by the Billing system which will include updated local and international tariff tables together with destination names to enable it to produce, as and when required, detailed reports containing the call data as well as the associated costs, over a user specified period ranging from thirty minutes to twenty four hours.

It shall be possible to generate hourly cost reports per user or other selection as chosen by the system operator.

The Contractor must provide details of the storage capacity in terms of call records and also formats of the reports (by division, section, type of user etc.) that its billing system is able to produce. A hardcopy device (printer) will also be attached to this system.

4.7 Software Features

The system shall have following minimum features

- General System Features:

  - Trunk direct inward dialing
  - Call data recording with customized report option
  - Malicious call trace
  - Night service
  - Dial/call by name

- Password for up/down grading of traffic class
- Number redial
- Call forwarding
- Call pickup
- System speed dialing
- Individual speed dialing
- Call back on no answer
- Call transfer
- Three and eight party conference
- Distinctive ringing
- Timed reminder service
- Hold toggle
- Connection restriction
- Cyclic/linear comfort hunt group
- Class-of-service changeover
- PIN/follow me
- Do not disturb
- Camp-on or camp-on security

- Station Features:

  - Direct connection between station
  - Direct access of stations to trunks
  - Automatic dialing
  - Call hold
  - Voice/data transmission and reception

- Attendant Console Features:

  - Switched Loop Operation
  - Visual/Audible Ordered Call signaling
  - Call Transfer
  - Station/Trunk Status Alphanumeric display
  - Alarm Indications
  - Interposition calling and transfer
  - Attendant Recall
  - Attendant Overflow
  - Call Park
  - Call Transfer
  - Handset/headset Operation
  - Attendant Intercept
  - Overriding
  - Trunk Queuing
  - Speed Calling

4.8 Telephone cables

The Telephone cables shall be multi-pair as mentioned in the Bill of Quantities. The cables shall be PVC insulated, 0.6mm dia tinned copper conductor cables.

4.9 PVC conduits on surface

The PVC conduits shall have same specifications as in section "PVC conduits & Pipes" of these specifications.

4.10 Spare Parts, Tools and Test Equipment

The Contractor shall be required to provide a guarantee in his Bid, that spare parts for the EPABX and ancillary equipment shall be available for a period of ten (10) years from the date of cutover of the EPABX system into service. The EPABX system shall be so designed so that no special tools for repair and replacement of systems modules and units will be required.

The Contractor must provide details of its maintenance organization and spare parts available at its offices in Pakistan.

5.0 INSTALLATION

5.1 Digital Telephone Exchange (EPABX)

The EPABX shall be installed at location as specified by the Engineer and in accordance with the manufacturer's instructions and details.

5.2 Main Distribution Frame

The Main Distribution Frame including Auto-Attendant System and Call Accounting and Billing System shall be installed at location as specified by the Engineer and in accordance with the manufacturer's instructions and details.

5.3 Power Supply

The Power Supply shall be installed at location as specified by the Engineer and in accordance with the manufacturer's instructions and details.

5.4 Telephone Sets

The Digital Telephone Sets shall be installed at location as specified by the Engineer and in accordance with the manufacturer's instructions and details.

5.5 Telephone cables

The Telephone cables for the proposed Telephone system shall be installed in accordance with the manufacturer's instructions and details.

5.6 PVC conduits

The PVC conduits shall be installed in or on surface of walls, columns and slabs. If installed on surface, the PVC conduits shall be installed with the use of suitable saddles. The saddles shall be spaced 18 inches center to center.

6.0 TRAINING

In the Contract, the Contractor is required to propose an on-site technical training program for the operations and maintenance personnel of the Client. Complete details of the training program (course content, duration, etc.) shall be provided as part of the Contract.

7.0 MEASUREMENT AND PAYMENT

7.1 General

The Contractor's bid amount against each Bill of Quantities item as given below shall include supply, installation, testing, commissioning and completion for all work specified herein and/or as shown on the Tender Drawings related to the item.

7.2 Digital Telephone Exchange (EPABX)

7.2.1 Measurement

Measurement shall be made for the number of each type and size of Digital Telephone Exchange (EPABX) acceptably supplied and installed by the Contractor.

7.2.2 Payment

Payment shall be made for the number of each type and size of Digital Telephone Exchange (EPABX) measured as provided above at the Contract unit price and shall constitute full compensation for supplying, installing, testing, commissioning and completion of Digital Telephone Exchange Mains power supply, back-up power supply, all hardware, software and all required accessories.

7.3 Main Distribution Frame

7.3.1 Measurement

Measurement shall be made for the number of each type and size of Main Distribution Frame including Auto-Attendant System and Call Accounting and Billing System, acceptably supplied and installed by the Contractor.

7.3.2 Payment

Payment shall be made for the number of each type and size of Main Distribution Frame including Auto-Attendant System and Call Accounting and Billing System, measured as provided above at the Contract unit price and shall constitute full compensation for supplying, installing, testing, commissioning and completion of Main Distribution Frame and all required accessories.

7.4 Power Supply

7.4.1 Measurement

Measurement shall be made for the number of each type and size of Power Supply acceptably supplied and installed by the Contractor.

7.4.2 Payment

Payment shall be made for the number of each type and size of Power Supply measured as provided above at the Contract unit price and shall constitute full compensation for supplying, installing, testing, commissioning and completion of Digital Telephone sets and all required accessories.

7.5 Telephone Sets

7.5.1 Measurement

Measurement shall be made for the number of each type and size of Digital Telephone Sets acceptably supplied and installed by the Contractor.

7.5.2 Payment

Payment shall be made for the number of each type and size of Digital Telephone Sets measured as provided above at the Contract unit price and shall constitute full compensation for supplying, installing, testing, commissioning and completion of Digital Telephone sets and all required accessories.

7.6 Telephone cables

7.6.1 Measurement

Measurement shall be made of the total number of running meters for each type and size of cable acceptably supplied and installed by the Contractor.

7.6.2 Payment

Payment shall be made for the number of running meters of each type and size of cable at the Contract unit price. The payment shall constitute full compensation for supply, installing, testing and commissioning of the required cables including all accessories.

7.7 PVC Conduits

7.7.1 Measurement

Measurement shall be made for the number of running meters for each type and size of conduits & pipes acceptably supplied and installed by the Contractor.

7.7.2 Payment

Payment shall be made for the number of running meters for each type and size of PVC conduit measured as provided above at the Contract unit price. The payment shall constitute full compensation for supplying and installing of the PVC conduits on surface or concealed in roof, walls, columns, floor or slabs including all mounting and/or installation materials and accessories.

SECTION – 15: GENERAL SPECIFICATIONS FOR ELECTRICAL SYSTEMS

1.0 SCOPE OF WORK

The scope of this contract covers all operation and activities required for proper and complete construction of internal/building electrification, external electrification & sub-station works and communication systems.

The works related to the Electrical & Communication systems that are included in the scope of this Contract are shown on the Tender Drawings, stated in the Bill of Quantities and explained in these specifications. All the equipment & allied accessories and their installation shall also comply with General Specifications described here-under, with other relevant provisions of Tender Document and WAPDA/other utilities' latest Specifications/Standards. Electrical & Communication systems shall broadly include but not limited to the following:

- Design, manufacturing, supply, installation, testing and commissioning of Lighting fixtures/Luminaries

- Design, fabrication, manufacturing, supply, installation, testing and commissioning of the 11kV 450 MVA 50 Hz Medium Voltage Switchgear

- Supply, installation, testing and commissioning of the MV 15kV three core Cross Linked Polyethylene Power cables in underground pipes or cable trenches.

- Design, fabrication, manufacturing, supply, installation, testing and commissioning of the Low Voltage 415 Volt three phase and 250 Volt single phase switchgears.

- Supply, installation, testing and commissioning of the Low Voltage Single core/multicore PVC/PVC & PVC/SWA/PVC Copper conductor cables in Cable trenches, underground pipes, on cable trays.

- Design, fabrication, manufacturing, supply, installation, testing and commissioning of the 415 Volt 50Hz Diesel Generator sets

- Design, fabrication, manufacturing, supply, installation, testing and commissioning of the Type 11/0.415 kV 50 Hz Indoor/ Outdoor Power Transformers

- Supply, installation, testing and commissioning of the Earthing of Electrical system.

- Supply, installation, testing and commissioning of the Maintenance Bypass Switch.

- Supply, installation, testing and commissioning of street light system.

- Design, Supply, installation, testing and commissioning of Digital EPABX, Digital Telephone sets, Operator Console and auxiliaries required for telephone system.

- Design, Supply, installation, testing and commissioning of Satellite Receivers, Dish Antenna, Local TV Antenna, TV sets, splitters etc. and all required accessories for The Satellite Master Antenna TV System

- Design, Supply, installation, testing and commissioning of Pre-Amplifiers, Mixing Amplifiers Power Amplifiers, Micro-Phones & Ceiling & column Speakers for Public Address system and sound systems.

- Design, Supply, installation, testing and commissioning of the Control Panel, Smoke Detectors, Heat Detectors, Manual Call Point and Audio Alarm etc. for complete Fire Detection & Alarm system.

The scope shall include the continuing of the contractor to remain responsible for removal of defects detected in the works and for achieving satisfactory operation/functioning/service of the works during defect liability period.

The contract shall include furnishing of all construction equipment, tools, labour, supervisory staff, plants, transport, power, testing apparatus/arrangements and all construction materials as shall be required for satisfactory completion of works strictly in accordance with the technical specifications and bill of quantities forming part of these tender documents and as per levels and dimensions as shown on the drawings supplied with these tender documents and in drawings which may be supplied by the Employer from time to time under approved variation orders.

The Contractor shall also be responsible to supply any other equipment not specifically mentioned in these Documents but which is necessary for proper operation of the works/ system included in the scope of this Contract. The Contractor shall solely be responsible for ensuring proper functional requirements of various equipments. He shall also be responsible for furnishing any additional piece of equipment and for making modification in the equipment as desired and/or approved by the Engineer to achieve proper co-ordination with various other equipment's offered in the bid and also with those installed by others.

2.0 RULES & REGULATIONS

The entire Electrical & Communication systems installation/work shall be carried out by licensed Contractor, authorized to undertake such work under the provisions of the Electricity Act 1910 and The Electricity Rules 1937 as adopted and modified upto date by the Government of Pakistan.

All works shall be carried out in accordance with the latest edition of the Regulations of the Electrical Equipment of Buildings issued by the Institute of Electrical Engineers-London, 16thed. NEC 1999, the Contract Documents, the Electricity Rules 1937 and bye-laws that are in force from time to time.

Any discrepancy between these specifications and the standards/ regulations shall be brought to the notice of Engineer for his instructions and decision of the Engineer shall be final and conclusive.

The Contractor shall be responsible for completing all formalities and submitting the test certificates as per prevailing rules and regulations, and shall have the installation passed by the Government Electric Inspector of that region. All requirements of the Electric Inspector and the utility company WAPDA shall be complied with.

3.0 AMBIENT CONDITIONS

All material and equipment supplied and installed shall be designed, manufactured and tested to meet the following ambient conditions unless specifically stated otherwise for any material/equipment.

Minimum indoor ambient temperature:	Zero Degree Celsius
Maximum indoor ambient temperature:	+ 40 Degree Celsius
Minimum outdoor ambient temperature:	Zero Degree Celsius
Maximum outdoor ambient temperature:	+ 50 Degree Celsius
Maximum Relative Humidity:	90 Percent
Minimum Relative Humidity:	10 Percent

The atmospheric conditions are tropical and arid.

4.0 MARKINGS

The Contractor shall provide "Danger Boards" and "Shock Charts", wherever required, to comply with the requirements of local Electricity Rules and according to normal practice.

5.0 SYSTEM DATA

Unless otherwise specified elsewhere, all equipment and material shall be designed to operate satisfactorily with the following minimum requirements with the specified tolerance without any derating.

a.	Voltage rating of equipments	MV	15000V	Three phase	±10%
b.	Voltage rating of equipments LT & DG Sets		500V 250V	Three phase Single phase	± 10% ± 10%
c.	DC voltages		24V DC 12V DC Others		± 10%
d.	Frequency		50 HZ		± 2 HZ

6.0 STANDARDS

The latest standards and codes of reputable organizations shall be applicable for the material and equipment specified herein and for installation work. Such organizations to be British Standard Institution (BSS), International Electro technical Commission (IEC), IEEE and NEC. In case the Specifications laid down herein differ from those given in the standards, then the better specifications shall govern. Wherever applicable, the equipment shall also conform to the requirements of Pakistan Standard Institution (PSI).,Pakistan Telecom Authority.

7.0 MATERIALS & WORKMANSHIP

All materials, equipment, accessories, fixtures and fittings, under the scope of this Contract, shall be brand new and in accordance with the Tender Specifications and the specifications of the British Standards Institute and Pakistan standards institute. Samples and detailed manufacturers shop drawings (including dimensional plans, elevation, sections, line and wiring diagrams, foundation details, component characteristics and data etc.), shall be approved by the Engineer before purchase or fabrication. The Engineer shall witness routine tests at the manufacturer's work sites and a test certificate shall be provided to him. Three copies of the test certificates at the manufacturer's works shall be supplied. All workmanship shall be first class and undertaken by workman skilled in the particular type of craft.

8.0 DEVIATIONS

The entire design of the Electrical systems of the project has been carried out to fulfill the Users requirements. The design is based on International standards/norms and practices. Special considerations have been made for ease in operation and maintenance of electrical systems of the project. Deviation may be allowed for the works covered under present scope of work, with the approval of Engineer/Client

9.0 EQUIPMENT AND MATERIALS

The equipment/materials of the Electrical systems of the tender have been designed using the latest editions of International Standards/Codes such as BS, ICE, NFPA, CP as mentioned in article 6.0 above. In these specifications certain types/makes of equipments/ materials have been specified for the purpose of general reference and guidance of the Bidder. However, names of certain manufacturers/suppliers of electrical equipments/materials have been recommended for this project.

The names and addresses of these recommended manufacturers/suppliers are given in the tender documents. The Contractor is bound to supply and install the required equipments/ materials only from the recommended manufacturers/ suppliers.
In case, if at a later stage in project, the contractor wishes to substitute the specified equipment or materials, he shall furnish complete details of equipment/ substitute to materials.

The equipment/substitute equipments/materials will only be considered by the Engineer if he is satisfied that the equipment/substitute material have technically

equivalent/better specifications .In case if the Engineer feels that the equivalent/substitute materials are of less cost compared to the specified materials then the contractor shall give comparative discount in the contract value of the BOQ items.

In case the cost of equivalent/substitute item is more the than the cost of BOQ item then no cost adjustment shall be made in the relevant BOQ item. Once the equivalent/substitute materials are recommended for approval by the Engineer the same shall be forwarded to the Employer/Client for their approval. The equivalent/substitute materials shall only be accepted after the Client's final approval.

All materials and equipments being provided by the Contractor & the Sub-contractor shall be interchangeable to the maximum extent with respect to makes, types, model etc.

10.0 DRAWINGS, AND DATA TO BE FURNISHED BY THE CONTRACTOR

Submittal

The contractor, after the award of work, shall submit for approval of the Engineer all drawings and cuts of equipment, appliances, fixtures and accessories that are to be furnished under the contract. After final approval of a sufficient number of copies as desired shall be furnished for distribution. Manuals, cuts, catalogues and drawings shall be clearly marked to indicate, the items furnished. Cuts of all fixtures, and not a few, shall be submitted.

Approval of Drawings and Data

The Contractor shall provide detailed electrical drawings, wiring diagrams, foundation details, etc., for all electrical and other systems etc., for the Engineer's review and approval.

The manufacturing of electrical equipment shall be started only after the above mentioned drawings and data are approved.

The time required for review and approval shall be considered included in the total time of completion of job.

Three sets of drawings and data for each equipment shall be furnished by the Contractor for the Engineer's approval before commencement of fabrication and manufacturing. The drawings to be supplied by the Contractor shall be as follows:

- Arrangements
- Dimensional Plans, elevations and front view
- Foundation Plan, anchors and configuration
- Incoming and outgoing cable termination positions
- Earthing arrangement

- Electrical Drawings showing:

  - Single-Line diagram
  - Detailed wiring diagram
  - All interconnections
  - Other electrical devices including meters instruments and their wiring diagram.
  - Signal and alarm circuit

Shop Drawings

The locations, routing and installation heights of the equipment etc. Which are given on the tender drawings, are approximate. These drawings depict only the position of various fixtures and outlets. All the detailed planning for electrical and communication systems including conduit routes etc. shall be carried out, well in advance of the actual execution of work, by the Contractor to the satisfaction of the Engineer. For this purpose the Contractor shall prepare shop drawings and obtain prior approval of the Engineer. Three prints of each shop drawings shall be submitted for obtaining approval. No piece of work shall be allowed to be executed at site without the availability of these approved shop drawings. These shop drawings shall clearly depict the load balancing chart of each distribution board. Time required for the preparation and approval of shop drawings shall be considered to have been included in the total time allowed for the completion of the work.

As-Built Drawings

Clearly annotated "As-Built" electrical drawings and diagrams shall be maintained upto date on site on completion of the Job. One reproducible and three prints of each drawing shall be submitted to the Engineer alongwith a recommended maintenance schedule chart and manuals/operating instructions for equipment supplied. The Contractor shall also provide complete detailed identifications of MV incoming and LV outgoing circuits, in the form of line drawings, for each pad mounted transformer. The line drawings shall be made on 20 SWG sheet metal work. The line drawings shall be clearly identified with permanent colors. The MV and LV. circuits shall being different colors. The sheet metal work shall be of suitable dimensions so as to be fixed on the inside of the door of the LV compartment of the pad mounted transformers. The line drawing shall be fixed with the help of rivets for permanent installation.

11.0 PRODUCT DELIVERY, STORAGE AND HANDLING

All equipment shall be boxed, crated or otherwise enclosed and protected during shipment, handling, storage and after installation until final acceptance of the equipment. Electrical materials shall be delivered in manufacturer's original cartons or containers with seals intact, as applicable. Large multi-component assemblies shall be delivered in sections that facilitate field handling and installation.

Unless designed for outdoor use, all equipment shall be kept dry, off the ground and covered from exposure to weather. Electrical equipment and equipment having anti-friction or sleeve bearings shall be stored in weather tight storage facilities. Heaters

in equipment shall be connected and operated until the equipment is placed in operation. The Contractor shall prevent corrosion, contamination or deterioration of stored equipment.

Equipment and materials shall be handled in accordance with manufacturer's recommendations. Large or heavy items shall only be lifted from the designated points. Padded slings and hooks shall be used for lifting to prevent damage.

All equipment shall be protected until final acceptance and all factory surfaces must be protected from impact, abrasion, discolouration and other damage. All damaged equipment must be repaired or replaced before final acceptance.

12.0 MANUFACTURER'S INSTRUCTIONS

The Contractor shall supply to the Engineer Three (3) copies of manufacturer's instruction manuals in properly bound form for installation, testing commissioning, operation and maintenance of the specified equipment including manuals of spare parts and tools of the equipment. One copy of the documents shall be submitted in original. The installation instructions shall be submitted four (4) weeks prior to commencement of installation of each equipment, and operation & maintenance instruction at least two (2) weeks before the time of commissioning. If the contractor fails to provide the documents the Engineer shall withhold issuance of requisite certificates and deduct suitable amount from the payments to the Contractor.

13.0 GUARANTEE

In addition to the Contractor guarantee and liabilities for satisfactory operation of the works, wherever advised by Engineer, the Contractor shall also furnish written guarantee of the manufacturer or supplier with respect to satisfactory performance, of each equipment. Guarantee shall be given for replacement and repair of part or whole of the equipment that may be found defective in material or workmanship. The guarantee shall as a minimum cover the duration of Maintenance Period as defined in the Conditions of Contract. This guarantee shall not relieve the Contractor of his obligations and he will be fully responsible for the repair or replacement of any defective material in time, so as not to cause any undue delay in carrying out the repairs and/or replacements.

14.0 INSTALLATION INSTRUCTIONS

The Contractor shall furnish all labor, materials, tools and equipment required to install, connect, test and commission all electrical equipment specified herein, whether or not such equipment is furnished by him or by others.

For all equipment to be installed by the Contractor, the Contractor shall supply and install all erection materials such as foundation bolts, washers, nuts, etc. as required and without any additional costs.

The Contractor shall set out the works himself as per Specifications and Drawings and shall properly position the equipment on specified foundation/location. In general, the manufacturer's instructions for installation shall be followed.

Any defect or faulty operation of equipment due to the Contractor not following the manufacturer's instructions shall be corrected and repaired by the Contractor at his own cost as per these specification and to the satisfaction of Engineer.

For any deviation from the working drawings that are deemed necessary by the Contractor due to site conditions, he shall submit the details and obtain the Engineer's approval before starting such works.

15.0 PRESHIPMENT INSPECTION AND TESTING

15.1 General

All equipments and materials covered in scope of this contract are subject to pre-shipment inspection & testing at the manufacturer’s factory/works. The Contractor, in coordination with the manufacturers of relevant materials shall arrange for the pre-shipment inspection & testing by the Engineer at the manufacturer’s factory/works. The Contractor shall make all necessary arrangements and cater for all expenses in this regard for the traveling, boarding and lodging of the Engineer plus daily allowance @ Rs. 500 per day per person within Pakistan and US $ 100 per day per person outside Pakistan, for the pre-shipment inspection and to witness the tests at the manufacturer’s factory/works.

15.2 Pre-shipment Factory Tests

15.2.1 MV & LV Switchgear, Generators, Transformers, Maintenance-Bypass Switch & Communication Systems Equipment

All type and routine tests on all equipment, materials and switchgear shall be performed at the manufacturer's works in the presence of the Engineer or his Representative. Type tests may be waived off in case test certificates, certified by an approved standard laboratory of international repute, approved by the Engineer, are submitted. But merely producing the type test certificates shall not relieve the Contractor and the manufacturer to carry out the required tests.

The Contractor shall obtain from the manufacturer and submit to the Engineer for approval, the complete details of tests to be performed describing the procedures, test observations and expected results.

The Contractor shall ensure availability of all tools, instruments, test equipments, materials, etc., and all qualified personnel required for the testing, setting and adjustment of all equipments and materials including putting the same into operation.

All tests shall be made with proper regard for the protection of the personnel and equipment and the Contractor shall be responsible for adequate protection of all personnel and equipment during such tests. The cost of any damages or rectification work due to any accident during the tests shall be the sole responsibility of Contractor.

The Contractor shall record all test values of the tests made by him on all equipment. Four (4) copies of all test data and results certified by the Engineer shall be given to the Engineer for record purposes. These shall also include details of testing method, testing equipment, diagrams, etc.

The Contractor shall inform the Engineer about the place, date and time of test, of each equipment at least, two (2) weeks in advance. The witnessing of test by the Engineer or his representative shall not absolve the Contractor from his responsibility for the proper functioning of the equipment, and for furnishing the guarantees referred to in clause 8.0. All test results shall be supplied in quadruplicate.

15.2.2 Insulation Resistance Test

Insulation resistance test shall be made on all electrical equipment by using a meggar of 500 volts for circuits upto 250 volts and meggar of 1000 volt for circuits between 250 and 500 volts. The Engineer shall advise the exact testing voltages. The insulation resistance values of cables, switchgear, etc., shall be as per BSS, IEC, ICEA and Pakistan Electricity Rules.

15.3 Field Tests

15.3.1 General

Upon completion of the installation, the Contractor shall perform field tests on all equipment, materials and systems. All tests shall be conducted in the presence of the Engineer for the purpose of demonstrating equipment and systems compliance with Specifications. The Contractor shall submit for Engineer's approval complete details of tests to be performed describing the procedure test observations and expected results.

The Contractor shall furnish all tools, instruments, test equipment, materials, etc., and all qualified personnel required for the testing, setting and adjustment of all electrical equipment and material including putting the same into operation.

All tests shall be made with proper regard for the protection of the personnel and equipment and the Contractor shall be responsible for adequate protection of all personnel and equipment during such tests. The cost of any damages or rectification work due to any accident during the tests shall be the sole responsibility of Contractor.

The Contractor shall record all test values of the tests made by him on all equipment. Four (4) copies of all test data and results certified by the Engineer shall be given to the Engineer for record purposes. These shall also include details of testing method, testing equipment, diagrams, etc.

The witnessing of any tests by the Engineer does not relieve the Contractor of his guarantees for materials, equipment and workmanship, or as any other obligations of contract.

15.3.2 Insulation Resistance Test

Before making connections at the ends of each cable run or joint between cables, the insulation resistance test of each cable section shall be made. Each conductor of a multicore cable shall be tested individually with each of the other conductor of the group and also with earth. If insulation resistance test readings are found to be less than the specified minimum in any conductor, the entire cable shall be replaced and tests repeated on new cable. If cable joint is provided, then each cable section shall be tested, and joint made only after the tests have been made satisfactorily. Finally the completed cable length including the joints shall be tested.

All switchgear shall be given an insulation resistance test after installation, but before any wiring is connected. Insulation tests shall be made between open contacts of circuit breakers, switches and between each phase and earth.

If the insulation resistance of the circuit under test is less than the specified value, the cause of the low reading shall be determined and removed. Corrective measures shall include dry out procedure by means of heaters, if equipment is found to contain moisture. Where corrective measures are carried out, the insulation resistance readings shall be taken after the correction has been made and repeated twice at 12 hours interval. The maximum range for each reading in the three successive tests shall not exceed 20% of the average value. After all tests have been made, the equipment shall be reconnected as required.

15.3.3 Earth Resistance Test

The Contractor shall make Earth resistance tests on the earthing system, separating and reconnecting each earth connection.

If it is indicated that soil treatment or other corrective measures are required to lower the ground resistance values, the Engineer will determine the extent of such corrective measures.

The electrical resistance of the ECC together with the resistance of the earthing leads measured from the connection with earth electrode to any other position in the complete installation shall not exceed one ohm.

Earth resistance test shall be performed as per Electrical Inspector's requirements. Where more than one earth electrodes are installed, the earth resistance test of each electrode shall be measured.

The complete lightning protection system shall be tested for continuity and earth resistance. The combined earth resistance at any point in the lightning protection system shall not exceed ten (10) ohms.

15.4 Completed Tests

After any equipment has been tested, checked for operation, etc., and is accepted by the Engineer, the Contractor shall be responsible for the proper protection of that equipment so that subsequent testing of other equipment do not cause any damage to the already tested equipment.

16.0 ASSOCIATED CIVIL WORKS

The cost of all civil works which are associated with any BOQ item are deemed to have been included in the respective items of Bill of Quantities unless specifically stated otherwise. The civil works shall include excavation, backfilling of earth, complication of the earth, foundation pads, grouting, chiseling, making openings, etc. Such works will also include repair of any damage to civil works caused by the Contractor during electrical installation.

17.0 EXPENSES TO BE BORNE BY THE CONTRACTOR

All expenses regarding travelling, boarding, lodging and witnessing of tests by the Engineer or his representative and/or the owner or his representative including costs for carrying out the required tests shall be borne by the Contractor and are deemed to have been included in the tender bid.

18.0 TEST CERTIFICATES TO BE FURNISHED BY THE CONTRACTOR

After all field tests have been carried at site, the Contractor shall furnish test certificates for the following equipments and materials as supplied and installed by the contractor;

- Lighting fixtures
- MV & LV Switch Boards & Distribution Boards
- MV & LV Power cables
- Diesel Generator Sets
- Power Transformer (11/0.415kV)
- Earthing system
- Pole & lighting luminaries
- Telephone system
- Satellite and Master Antenna TV system
- Public Address and Sound system
- Fire Detection & Alarm system

19.0 PAYMENT

No separate payment shall be made for work involved within the scope of this section, unless specifically mentioned in the respective items of Bill of Quantities.

1.0 ELECTRIC WORKS

1.1 DESCRIPTION

The work under this Contract consists of supplying, storage at site, installing, testing and commissioning of all materials and services comprising poles, lighting fixtures, lighting control panels, distribution transformers, cables, earthing, conduits and pipes etc., as specified herein, shown on the Drawings and given in the Bill of Quantities. Small items which are not expressly specified but which are necessary for completion of work shall be supplied by the Contractor without extra cost. The supply connection for lights etc. shall be obtained from the nearby WAPDA source. The work shall be complete in every respect for satisfactory operation as per specifications and standards give hereinafter.

The Contractor shall co-ordinate with the Engineer at site with respect to other services for exact location and position of all electrical equipments.

1.2 GENERAL

The location of the lighting fittings, poles, distribution boards, lighting control panels, distribution transformers and cables etc. are tentatively shown on the drawings. The Contractor shall ensure the exact position and location of poles and cable routes etc. in coordination with other services as per site requirement. The Contractor shall be responsible for proper light distribution on the road/underpass surface from the proposed luminaires and other equipment after installation and commissioning. He shall be fully responsible during maintenance period of the works.

The road/underpass lighting work shall be installed as per requirements of BS-5489 or other similar international standards. The Contractor shall also comply with the regulations of Pakistan Electricity Act and requirements of Water and Power Development Authority (WAPDA), wherever applicable.

The quality of equipment shall be of the best grade for each type, even though such quality may not be stated specifically in the specifications. All materials and products shall be new and manufactured by well known firms. Furthermore, these shall be sound and uniform in quality, size, shape, colour and texture and free from cracks, wrapage or other defects.

Component parts of each electrical system or piece of equipment shall be the latest standard product of a single manufacturer unless otherwise specified and provided sub-components, manufactured by different manufacturers are of specified standards design and dimensions and interchangeability is possible and shall normally have been satisfactory in service for at least two years.

The design criteria for road lighting are based on the following parameters;

Luminance (L) cd/m^2	1~1.5 cd/m^2
Overall Uniformity (Uo) (Uo = L min./L avg.)	0.4
Uniformity of Each lane (UI) (UI = L min./L max.)	0.5 – 0.7
Threshold increment not exceeding	≤ 10

Road surface characteristics as per IEC classification is type R2 with qo = 0.07.

The contractor shall be responsible and confirm in writing that his selection of equipment will ensure on the road surfaces luminance level and uniformities equal or better than those defined in the lighting design criteria.

Within six (6) weeks after award of the contract, the contractor shall submit the technical details of the luminaries and other equipment and having obtained conditional approval thereof submit in duplicate, full detail of the calculated results for the level and uniformity of luminance and illumination on all road surface .These detail should be submitted in the format as described in the relevant IEC publication and after initial approval by the engineer.

1.3 APPLICABLE REGULATIONS AND STANDARDS/CODES

The latest edition of the following standards & codes shall be applicable for the materials within the scope of this work.

IEC - International Electro-technical Commission

IEEE - Institute of Electrical and Electronics Engineers U.S.A. (IEEE Wiring Regulation UK).

BSS - British Standard Specifications

VDE - Verband Deutscher Electro-technical (Association of German Electrical Engineers)

NEMA- National Electrical Manufacturers Association, U.S.A.

PSI - Pakistan Standards Institution

CIE - Commission Electro-technique International

1.4 TESTING

1.4.1 Factory Tests

a. General

All type and routine tests on switchgear and all other equipment shall be performed at the manufacturer's works in the presence of the Engineer or his representative. Type tests may be waived off in case test certificates as certified by an approved standard laboratory of international repute are provided by the Contractor and approved by the Engineer. Submission or merely producing the type test certificates shall not relieve the Contractor to carry out the required standard/routine tests.

The Contractor shall arrange at his own cost factory visit(s) for pre-shipment inspection/testing for all major electrical equipment offered. Airfare to and from inspector's home town (two persons), boarding, lodging and transport shall be Contractor's, responsibility and all costs in this respect shall also be borne by the contractor.

In addition, for all pre-shipment inspections carried abroad, the Contractor shall provide (for two persons) daily allowance @ 200 US$ per day for out of pocket expenses, at per diem rate per person currently recommended by Chamber of Commerce and Industry for foreign travelers on business visa. The number of days shall be actual days spent in travel from and to the home town of the concerned inspector but not less than five (5) days. The 200 US$ per day per person in cash shall be provided before start of travel from hometown.

For all pre-shipment inspections carried out within Pakistan, the Contractor shall provide (for two persons) daily allowance of Rs. 2,000 for out of pocket expenses, at per diem rate per person. The amount shall be provided in cash before start of travel from hometown for the entire duration of the visit.

The Contractor shall inform the Engineer about the date and time of test of each equipment at least two weeks in advance. The witnessing of test by the Engineer or his representative shall not absolve the Contractor from his responsibility for the proper functioning of the equipment, and for furnishing the guarantees. All test results shall be supplied in triplicate.

b. Insulation Resistance Test

Insulation resistance test shall be made on all Electrical

equipment by using a meggar of 500 volts for circuits upto 250 volts and 1000 volts for circuits between 250 and 500 volts.

The insulation resistance values of cables, switchgear, etc., shall be as per BSS, IEC and Pakistan Electricity Rules.

1.4.2 Field Tests

a. General

Upon completion of the installation, the Contractor shall perform field tests on all equipment, materials and systems. All tests shall be conducted in the presence of the Engineer for the purpose of demonstrating equipment or system compliance with Specifications. The Contractor shall submit for Engineer's approval complete details of tests to be performed describing the procedure, test observations and expected results.

The Contractor shall furnish all tools, instruments, test equipment, materials etc. and all qualified personnel required for the testing, setting and adjustment of all Electrical equipment and material including putting the same into operation.

All tests shall be made with proper regard for the protection of the personnel and equipment and the Contractor shall be responsible for adequate protection of all personnel and equipment during such tests.

The Contractor shall record all test values of the tests made by him on all equipment. Three (3) copies of all test data and results certified by the Engineer shall be given to the Engineer for record purposes. These shall also include details of testing method, testing equipment, diagrams etc.

b. Earth Resistance Test

Earth resistance test shall be made by the Contractor on the earthing system, separating and reconnecting each earth connection.

If it is indicated that soil treatment or other corrective measures are required to lower the ground resistance values, the Engineer will determine the extent of such corrective measures.

The Electrical resistance of the ECC together with the resistance of the earthing leads measured from the connection with earth electrode to any other position in the complete installation shall not exceed five ohm.

Earth resistance test shall be performed as per Electrical Inspector's requirements. Where more than one earth electrodes are installed, the earth resistance test of each electrode shall be measured by means of resistance bridge instrument.

c. Switchgear Test

Each circuit breaker shall be operated electrically and mechanically. All interlocks and control circuits shall be checked for proper connections in accordance with the wiring diagrams furnished by the manufacturer.

The Contractor shall properly identify the phases of all switchgear and cables for connections to give proper phase sequence.

Trip circuits shall be checked for correct operation and rating of equipment served. The correct size and function of fuses disconnect switches, number of interlocks, indicating lights, alarms and remote control devices shall be in accordance with approved manufacturer drawings. Name plates shall be checked for proper designation of equipment served.

2.0 POLES FOR ROAD LIGHTING

2.1 SCOPE OF WORK

The work under this section consists of designing, manufacturing, supplying, installation testing and commissioning of the street lighting poles and accessories as specified herein, or as shown on the Tender Drawings and given in the Bill of Quantities.

The Contractor shall discuss the electrical layout with the Engineer and coordinate at site with other services for exact location and position of the electrical poles.

The poles with accessories shall also comply with the General Specifications for Electrical Works Section-8001 and with other relevant provisions of the Tender Documents.

2.2 APPLICABLE STANDARDS/CODES

The latest editions of the following standards/codes shall be applicable to the material specified within the scope of this Section:

ASTM A36	-	Steel for Pole and Base Plate
ASTM A307	-	Anchor Bolts

BS EN ISO 1461 - Galvanization

ASTM A123 & A385 - Galvanization

2.3 CONSTRUCTION OF POLES

The galvanized steel poles shall be of mild steel as shown on drawing from base plate to lantern connection, well proportioned and neatly finished. The height of the pole from the centre line of the spigot for lantern connection to the ground line and out-reach of each arm from the vertical centre line of the pole to the tip of the spigot for lantern attachment shall be as shown on Drawing. Approval of the Engineer shall be obtained before ordering the poles for manufacturing.

The pole (vertical portion) alongwith base plate shall preferably be in one piece. But if manufacturing in one length is not possible, it can be in two or three pieces with force fit lap joint.

The steel poles after fabrication shall be galvanized by hot dip process (inside and outside) as per applicable standards -Hot Dip Galvanized Coatings on Iron and Steel Articles'. The poles shall be prepared before galvanizing by removing grease, burs and slag etc. so that zinc coating is adherent, dense, smooth, continuous and uniform. The Contractor shall ensure before placing of order that the firm has adequate facility for hot dip galvanizing process as per standard practice. The steel used in the manufacture of poles shall be made by open hearth or electric furnace process.

The straight portion of the pole shall be truly vertical and no deviation more than 100 mm in the entire length shall be accepted.

Other tolerances shall be as follows:

-	Outside diameter	=	+/- 1%
-	Wall thickness	=	+/- 10%
-	Overall length of pole	=	+/- 0.5%
-	Weight	=	- 0.3% + not limited.

The pole and the bracket shall be so designed that when subjected to wind at a velocity of 160 km/hour on the full projected area of pole, bracket and the lantern a factor of safety of 3 on minimum tensile strength of the material shall be obtained. In addition, the temporary horizontal deflections at the lantern position shall not exceed 1/40 of the length of the pole above ground at aforementioned wind velocity.

The poles shall have a base compartment, designed to accommodate a loop-in services cutout for 4 core PVC/SWA/PVC cables of given sizes. A 8 mm stainless steel stud complete with nut and washers shall be provided in the base compartment of the pole for earthing purpose.

The edges of the door opening on the pole shall be reinforced with a 10 mm thick M.S. square bar to reinstate the strength of pole at this location. The opening cover shall consist of weather proof hinged door. The door shall be provided with a heavy duty non-rusting lock.

Flag brackets shall be fitted to poles if shown on the drawing and shall be as approved by the Engineer.

2.4 INSTALLATION

Lighting poles shall be handled/transported and erected in such a way so as to avoid any damages. Any damage to pole or galvanizing shall be made good to the satisfaction of the Engineer.

The lighting poles shall be stored clear of soil, ground water or other rust producing materials. The fixing of poles shall be carried out in accordance with manufacturer's instructions and good engineering practice.

The poles shall be erected in a true vertical position.

Where lighting poles are to be installed in the vicinity of overhead power lines, the Contractor shall inform the Engineer and act as directed. He shall maintain clearances as per WAPDA requirements from the power lines.

The Contractor shall number all the poles with high quality paint using stencil for 50 mm high lettering. The numbering shall be at 1200 mm from the bottom of pole towards the road. The numbering shall be in a manner as directed by the Engineer.

Earth backfill around pole foundation shall be done in 150 mm thick layers and shall be well ramed and compacted to provide full lateral support.

2.4.1 Data to be submitted

Before manufacturing, the Contractor shall submit for approval of the Engineer, the shop drawing of the pole anchor bolts, base plate and pole bracket together with details of the base compartment, cover and the means adopted for making it waterproof and tamperproof. Design calculation sheets for the poles from manufacturer shall also be submitted by the contractor to show that poles/foundations are safe for all specified stresses.

2.5 TESTS

2.5.1 General

The poles shall be tested and the results recorded for each test by the manufacturer in the presence of an authorized representative of the Owner or Engineer as stated below.

2.5.2 Inspection

Prior to inspection, checklist shall be submitted pertaining to fabrication of each pole lot duly filled in by the manufacturer.

The material, weight and dimensions of poles as specified shall be certified by the manufacturer. The poles shall be inspected and in case being found below the limits of tolerance as aforementioned, shall be rejected.

2.5.3 Sample Test

Sample of poles shall be selected at random basis from each lot of high masts and poles and shall be checked in accordance with the project specific requirements, BoQ, relevant construction drawings and applicable manufacturing standards. Factory routine test certificates shall be submitted by the manufacturer for each type of high masts/poles.

2.5.4 Galvanizing

Weight, uniformity of coating and other requirements shall be strictly inspected in accordance with applicable standards.

2.5.5 Service Cutouts

Each pole shall be provided with a waterproof and dust tight loop-in-service cutout accommodated in the base compartment of the pole.

The junction box shall comprise two (2) 2A MCB, for double arm poles and one (1) 2A MCB in accordance with IEC 60947 for single arm poles, a solid neutral link and an earthing terminal. It shall incorporate arrangements for looping "IN" and "OUT" for 4 core up to 25 mm^2 PVC/SWA/PVC cable having copper/aluminium conductor. The earth terminals, nuts and washers shall be adequately sized to take the earth continuity conductors with tight connections.

Dimensional drawings and details of the junction cutout box of pole shall be submitted for approval to the Engineer.

2.6 MEASUREMENT AND PAYMENT

2.6.1 Measurement

Measurement shall be made for the number of poles including all accessories and foundation block acceptably supplied and installed by the Contractor as shown on the drawing.

2.6.2 Payment

Payment shall be made for the number of units measured, as provided above, at the contract unit price each, and shall constitute full compensation for supplying, installing, connecting, testing and commissioning of each pole including junction cutout box.

The galvanized steel poles shall be of mild steel as shown on drawing from base plate to lantern connection, well proportioned and neatly finished. The height of the pole from the centre line of the spigot for lantern connection to the ground line and out-reach of each arm from the vertical centre line of the pole to the tip of the spigot for lantern attachment shall be as shown on Drawing. Approval of the Engineer shall be obtained before ordering the poles for manufacturing.

3.0 LUMINARIES

3.1 Description of Scope of Contract

Manufacturing, supply, installation, testing and commissioning of Light Emitting Diode (LED) Road Lighting Fixtures of make/model of Philips, GE or equivalent, conforming to the international standards, suitable for ME 1, ME 2 and ME 3 roads, with built-in flexibility in the optical system for each of the wattage groups as specified:

3.2 Major Contract Components

The major contract components are the lighting design calculations for project specific requirements, design & manufacturing, type testing (or test reports from independent laboratories on similar fixtures), factory acceptance testing, supply/transportation to site, installation at site, site acceptance testing & commissioning and maintenance & local support during Four (04) years warranty period of LED Road Lighting Fixtures after defect liability period of one year and the associated equipment/hardware thereof.

3.2.1 Lighting Installation Period

The installation period may vary as per project specific requirements. However, the delivery schedules are defined in the Tender Documents.

3.2.2 Specifications

3.3 General Requirements

3.3.1 Housing

The fixture shall have a full die cast aluminum housing providing adequate rigidity, strength and heat dissipation. Bidder to provide the manufacturing standard details.

The housing shall have integrated driver and LED lamp compartments for better heat dissipation and convenience in maintenance at the site,

and shall feature multilayer optic with highly reflective components to increase light output.

The optical LED compartment shall have thermally hardened (Tempered) glass cover and high quality silicon gaskets. The glass shall be extra-white for maximum light transmission. The glass cover shall be tightly secured with the housing.

The bidders/supplier/manufacturer shall submit the samples of each wattage/type/model of the fixture being offered along with its submittal.

3.3.2 Optics

The fixtures for the project shall have flexible optical systems for the wattage range in the respective group.

The fixture shall use high efficiency (greater than or equal to 90%) LED and optics system.

The Light Output Ratio (LOR) shall not be less than 85%.

The fixture shall offer composite system efficiency above 110 lumen/Watt (tolerance of +/-5%).

The lens system design and high efficiency LED shall facilitate maximum spacing between the road lighting poles and coverage of wider roads.

The multilayer optics design shall ensure adequate luminance and illuminance uniformity in the unlikely event of an individual LED failure.

The fixture shall offer choice of narrow, medium and wide beam light distribution.

The optical lens system shall feature long life with no discoloration (UV protection), highest possible light transmission and having high reflectivity for maximum light output.

3.3.3 Surge Protection

The lighting fixture shall have surge protection to protect the electronic driver and LED system. Minimum surge protection rating shall be 10 kV.

SPD should comply to IEC 61347-2-11 and should be listed in Luminaire IEC 60598-2-3

3.3.4 IP Protection / Impact Resistance

The complete fixture including lamp and gear compartments shall have minimum ingress protection class IP66 for Road Lights and IP65 for Flood/tunnel Lights for long reliable performance and minimal maintenance requirement and an Impact Resistance of IK08 or above(Road Lights) and IK07 or above(Flood/tunnel Lights). No chemical glue shall to be used as that may cause breakdown of water-proof and dust-proof seal. All Synthetic material shall be 100% UV stable and scratch resistant.

3.3.5 Design of Fixture w.r.t Maintenance

Both the driver and LED compartments shall be designed to be easily accessible for maintenance. Whatever method of i.e clamps/screws for securing/assembling of fixture is used, it is to be ensured that the fixtures are designed in a manner so that frequent opening/closing at site during maintenance does not compromise its ingress protection (IP) rating and the various components like terminal blocks, LED drivers etc. are not dislocated from their designated position.

Gaskets are to be properly secured in special groves made for the same and must not be fixed to the body by any adhesive material.

The components inside the gear compartment like LED drivers, terminal blocks etc. must be easily detachable by using plug and play connectors/terminals to ensure ease of replacement at site and to be secured in the body of the fixture making special mounting arrangements so that the same are not dislodged/dislocated from their designated position.

3.3.6 Mounting

The mounting of the fixture shall be in axial orientation through suitable sized sidearm. The means for attaching the luminaire or external part to its support shall be appropriate to the weight of the luminaire or external part.

3.3.7 Future Compatibility

The fixture shall be fully compatible with future LED upgrades when they become available. It shall have a modular design to upgrade / replace with new LED modules or LED drivers at site conveniently with minimum effort. All electronic components/ drivers shall be mounted in a manner so that they are easily accessible and replaceable during maintenance. Lamp compartment shall have an easy access for opening and closing at site.

3.4 LED Driver/Electronic Control Gear for LED Modules

The LED driver shall be designed to operate large array of high powered LEDs through current controlled output. The driver shall be suitable for 230V, +10%, -15%, 50Hz, single phase mains AC supply.

The LED driver shall have an efficiency of at least 90%.

The LED driver shall have energy saving/dimming options. So, that the driver can be easily programmed at site in a manner that different output wattages are available from the same fixture as per requirements. In the late night mode the fixture can thus be operated at various reduced wattages as per traffic conditions to have an energy efficient use.

The LED driver shall be of Philips, Meanwell, GE, Schwabe or Lightech Make or equivalent (duly type tested as specified and in full conformance to the technical requirements/specifications).

The driver shall have Power Factor (PF) >0.90 at maximum load.

3.5 LEDs

The LED chip shall be Philips Lumiled, Cree, Nichia or Osram make or equivalent (duly type tested as specified and in full conformance to the technical requirements/specifications).
The LEDs shall:

- Be designed for lumen maintenance of L70 or 70% at the end of useful life at ambient temperature of 35 ºC.
- Have a useful life of 50,000 burning hours at 50 ºC.
- Have a minimum color rendering index (Ra) of 70 (+10/-10) and a color temperature above 5000K.
- Have a color consistency within 7 SDCM (standard deviation of color matching) as defined by MacAdam.

The bidder shall submit the exact details w.r.t the model number, binning efficacy, CRI/CCT, LM 21 calculations of LED chip/wafer being used in the fixtures manufactured by them.

3.6 Thermal Management

Managing thermal properties in LED fixtures is most critical to ensure optimum performance of LEDs and reliability of the system.

The housing under the circuit board shall be specially designed to ensure perfect contact between the board and the fixture housing for efficient heat dissipation.

PCBs used shall maximize the heat transfer process and to offer reinforced electrical insulation via dielectric layer. The PCB shall be mounted on the housing using a highly efficient thermal interface material. Use of Silicon glue is not acceptable. The PCB used shall be from a reputed PCB manufacturer

offering fully traceability of the product along with its serial number/identification numbers to ensure quality of the product.

The housing shall have additional ribs and shall also have adequate surface area to ensure fast heat dissipation.

3.7 Photometric

Fixtures shall have Illumination Engineering Society (IES) Type II or III distribution pattern, with short or medium longitudinal distribution.

LM-80 LED and photometric test reports and IES files from a third party testing Laboratory/authenticated source shall be available.

Photo Biological Safety:

Ensure luminaries comply with Photo biological Safety of lamps and lamp systems in accordance with the requirements of BS EN 62471:2008 or ANSI/IESNA RP-27. 3-0.

Provide proof of testing and compliance to the standards along with certification provided to prove the fixture is classed as “Exempt” or Risk one. (The main target is to show up passed for blue rays toxic effect on retina)

Required Lighting Levels:

Unless otherwise mentioned, LED street lighting suppliers shall follow CIE115, including M1, M2, M3, M4 lighting levels as per applications and given parameters.

A maintenance factor of 0.75 shall be used on all lighting calculations, provided that the supplier need to submit lighting calculations at MF of 1 represents the day one measurements shall be submitted along with 0.75 calculations.

3.8 Warranties & Maintenance

The complete fixture including all accessories shall have at least four (04) years warranty, after one year of Defect Liability Period (DLP), against any manufacturing defects and failures.

The LED manufacturer /authorized agent/assembler shall not only be responsible for 5 years of warranty but also during the warranty period maintenance of the fixtures including free of cost replacements of any/all defective components/parts against manufacturing defects with the genuine products/components through the manufacturer/authorized agents under the supervision of the contractor/ maintenance agency.

The involvement of the manufacturer/authorized agent for maintenance/ replacement of components is considered important because the warranty of the manufacturer becomes void if genuine product/manufacturer recommended methodology/components installation is not followed. In addition to this it is also necessary that genuine branded products those offered at the time of supply with the fixtures are provided for the 5 years of warranty / component replacement period.

Undertaking in this regard shall be submitted by the contractor as well as manufacturer/authorized agent/assembler to the Client.

Further, if required, the manufacturer/authorized agent/assembler through contractor shall provide the proof of genuineness from the manufacturer for various components provided/installed in the fixtures after fulfilling the technical requirements

The road light supplier/manufacturer shall be bound to make on site measurements to the Client's representatives wherever, applicable (i.e., where a dedicated & proper lighting network has been designed) if required, by the client for cd/m^2 (Luminance) on annual basis to ensure the compliance of the desired output light levels in accordance with CIE 140 with Luminance meter. In this manner the light output depreciation and useful life of the LEDs (50,000 burning hours) shall be compared accordingly. In case, the lighting output depreciation is not within the limits prescribed by the standard as well as any other non compliance/mal-operation of any component is noted, the contractor/ road lighting manufacturer shall be responsible for replacement of any/all component free of cost during the warranty period. The undertaking in this regard shall be submitted through the contractor on manufacturer's letter head to the Client.

An undertaking shall be submitted by the contractor/supplier on manufacturer's letter head clearly confirming that the submitted reports are original and test values/results mentioned in the reports are authenticated.

Contractor/supplier/manufacturer shall confirm that the LED chip/wafers, drivers, SPDs used are genuine and shall furnish the undertaking of LED chip/wafer, drivers & SPDs manufacturers on its letter head where applicable for use of LED chips/wafers, driver & SPDs in the fabrication/manufacturing of LED light fixture.

The Contractor shall have an active team in consultation with the Client responsible to check the non operational lights on daily basis and shall rectify within two (02) days on self response basis (pertaining to his scope only) during DLP and uptil warranty after DLP, otherwise the penalty @ of PKR 200 per day of delay for each non-operational light will be charged from the Contractor. In case the fault is not on his part he will promptly notify the same to the concerned authority.

3.9 Applicable Standards and Codes

The fixtures shall conform to the following latest standards and codes. It shall be the mandatory requirement that the bidder shall submit detailed type test reports from certified international testing agency / laboratory / body to establish its conformance to the specified international standard.

- IEC 60598-1
- IEC 60598-2-3 (Road & Tunnel Lights)
- IEC 60598-2-5 (Flood Lights)
- LM-79 for the luminaries being offered (Model/Wattage specific)
- LM-80 for LED chip being used
- LM-82-12 (Model/Wattage specific)
- IEC 62471 (For the complete fixtures being offered as well as for the LED Chips)
- EN 55015 : 2006 and 2007 – Limits and methods of measurement of radio disturbance characteristics of electrical lighting
- EN 61547 : 1995 / +A1 : 2000 – Equipment for general lighting purpose EMC immunity requirements
- EN 61000-3-2 : 2006 – Limitation of harmonic current emission
- EN 61000-3-3 : 2008 – Limitation of voltage fluctuation and flicker
- EN 62493- Assessment of lighting equipment related to human exposure to electromagnetic field (environmental friendly)
- Thermal management test (UL 1598) (Model/Wattage specific)
- IP Degrees of protection provided by enclosures (IP Code)
- Degrees of protection provided by enclosures for electrical equipment against external mechanical impacts (IK code)

The LED driver shall conform to following latest standards and codes:

- EN61347-1: Lamp control gear general and safety requirements
- EN61347-2-13: particular requirements for DC or AC supplied electronic control gear for LED modules
- EN62384: DC or AC supplied electronic control gear for LED modules performance requirements
- Technical and descriptive data and drawings.

3.10 Technical and Descriptive Data and Drawings

Technical and descriptive data and drawings to be submitted shall include but not be limited to the following:

- Technical data of fixtures and driver
- IES photometric file(absolute photometric data)
- LM-79 test report for each of the fixture type/wattage being offered.
- LM-80 test report of LED used
- LM-82-12 (test report) of the fixture type/wattage being offered.
- Thermal management test report (UL 1598) of the fixture type/wattage being offered.
- EN 62493- Test report
- IK rating test report

- Lumen depreciation test report at 1000, 2000, 3000, & 6000 burning hrs.
- 3rd Party IEC 60598 test reports.
- Vibration test report
- EMC test report
- Salt spray test report
- Photo- biological safety test report
- Customer testimonials
- Factory ISO certificate
- Reports of other type tests stipulated in the respective standards/codes
- Country of origin, Manufacturing works/ factory details, premises & QA & QC procedures, in-house testing procedures, routine testing procedures/protocols with traceability mechanism on light fixtures being manufactured and testing equipment details w.r.t make/model & calibration available at premises shall be provided.

Contractor/Supplier shall be bound to furnish (if required) the original test reports for onward confirmation/verification/authentication of the relevant parts/results/calculations of the test reports as required from the testing Laboratory.

Supplier/manufacturer shall be bound to arrange for the third party testing of the LED lights from approved accredited laboratory by third party of international repute prior to placement of order.

3.11 International Independent Laboratories

For the specified requirements of type tests and type test reports by an independent authority/independent laboratory(specific to their status/approval for performance of specific test(s) on the fixtures as defined in the project), the following laboratories shall be considered as independent laboratories:

- DEKRA (KEMA) Labs, Holland.
- CESI Labs, Italy.
- CRIEPI Labs, Japan.
- Any other laboratory accredited by EA (European Co-Operation for Accreditation) or a member thereof.
- Any other laboratory accredited by ILAC (International Laboratory Accreditation Cooperation) or a member thereof.
- Any other laboratory accredited by IAF (International Accreditation Forum) or a member thereof.
- Any other laboratory accredited by STL (Short-Circuit Testing Liaison) or a member thereof.

4.0 CONDUITS AND PIPES

4.1 DESCRIPTION

When cables cross road, paved area or other services, they shall be laid in protective pipes of required size. The pipe ends after installation of cable shall

be plugged to make them watertight by means of bituminized hesian or equivalent material.

Conduits/ pipes/ ducts for electrical cables shall be properly sealed with the water proofing material "Plastic Polyurethane Foam" as per relevant ASTM standard to avoid rain water entry to the conduits. The contractor shall also provide the technical data of the sealant material before the execution of the work.

4.2 GENERAL

The extent of works shown on the drawing does not indicate the exact position of conduits and pipes. The Contractor shall ensure exact location and route of conduit and pipes in coordination with other services drawings, as per site requirements and as directed by the Engineer.

4.3 APPLICABLE STANDARD/CODES

Latest editions of the following standards / codes shall be applicable for the materials in scope of this Section:

BS 6099	-	PVC conduits and accessories.
BS 3595	-	PVC pipes & accessories.
BS 4346	-	Cement Solvent for jointing

4.4 MATERIAL

4.4.1 PVC Conduits and Accessories

The heavy gauge PVC conduits and accessories conforming to BS6099 shall be generally used. The PVC conduits and accessories of light gauge may be used on the project with the concurrence of the Engineer.

The PVC bends, sockets, elbows, couplings, etc. shall conform to the same specifications as for the conduits. The PVC bends shall have enlarged ends to receive conduit without any reduction in the internal diameter at joint. Manufactured smooth bends shall be used where conduit changes direction. Bending of conduits by heating or otherwise will not be allowed in any situation. The use of sharp 90-degree bends and tees will not be allowed for concealed wiring.

The round PVC junction boxes for ceiling light or fan points shall have minimum dimensions of 63-mm diameter and depth. The junction boxes for wall light points shall have minimum dimensions of 63-mm diameter and 38 mm deep. Round junction boxes shall be provided with one piece PVC cover plate fixed to the box by means of brass screws.

4.4.2 PVC Pipe and Accessories

The PVC pipe shall be rigid. All pipes shall be minimum Class D, unless otherwise stated on drawings or bill of quantities. The buried PVC pipe should be able to withstand the external load acting upon it by continuous movement of heavy duty vehicles such as trucks. Cranes, forklift, etc. Where pipe change direction, manufactured smooth bends shall be used. Bending of pipes by heating or otherwise will be allowed in special cases only. Bending of pipes by heating shall be carried out by first filling the pipe with sand inside and then immediately removing the sand. The use of sharp 90-degree bends and tees will not be allowed. The bends shall conform to same specifications as given for PVC conduits. for joining of pipe all precautions and procedures recommended by manufacturer shall be followed.

4.5 INSTALLATION

4.5.1 Concealed Conduits

Where concealed conduit system as stated on drawings, the conduit shall be installed concealed in roof, wall, column, etc. Conduits shall be laid underfloor only where specifically stated.

When concealed the conduit shall have a minimum of 32-mm cover of concrete measured from the top of conduit to finished surface. In the reinforced cement concrete (RCC) work the conduit shall be laid before pouring of Concrete. Under no circumstances shall chases be made in the RCC structure for concealing conduit and Accessories after pouring of concrete. The conduit shall be supported on top of bottom reinforcement of slab. All outlet boxes to be firmly supported and installed such that they finish flush with the soffit of slab or beam.

Where conduits have to be concealed an cement concrete (CC) work after concreting or in block masonry chase shall be made with appropriate tools and shall not be made deeper than required. The conduit shall then be fixed firmly in the recess and covered with cement concrete mixture. The work of cutting in the cement concrete work or block masonry work shall be coordinated with the civil work. The Contractor shall obtain approval from the Engineer before starting chasing and cutting.

The termination of conduits at or near the equipment switchboard as shown diagrammatically on the drawings. The exact locations of the termination shall be coordinated with the equipment/switchboard to be installed. Any extension of conduit to suit the site condition shall be made without any extra cost. Conduit ends pointing upwards or downwards shall be properly plugged in order to prevent the entry of

foreign materials. All openings through which concrete may leak shall be carefully plugged and boxes shall be suitably protected against falling with concrete. At all terminations of conduit sharp edges of conduit ends shall be prevented to avoid the cutting or damaging of wire or cables during pulling through the conduits.

Under floor conduit shall be installed at a minimum depth of 2 inches from the finished floor level or as shown on the drawings. The conduits shall be installed empty before finishing of floor or in RCC work with a 18 SWG steel wire drawn through the conduit for pulling cable. No conduits shall be laid under floor in bathroom.

The entire conduit system shall be installed and checked before wiring as carried out. Any obstruction found shall be cleared before the installation of cable. Pull boxes and adaptable boxes shall be provided an conduit runs wherever required to facilitate pulling operation. The drawings are diagrammatic and do not indicate the position and spacing of pull boxes or adaptable boxes. However, these shall meet the following requirements.

- Pull boxes
- For straight runs the spacing shall not be more than 180 feet
- For runs with one 90degree bend the spacing shall not be more than 90feet
- For runs with two 90degree bends the spacing shall not be more than 40feet
- Adaptable boxes
- For conduit upto 1-inch dia. the boxes shall be 2 inch in depth
- For conduit upto 1-1/2 inch dia. the boxes shall be 2-1/2 inch in depth
- For conduit upto 2-inch dia. the boxes shall be 3-1/2 inch in depth

The rectangular inspection boxes or pull boxes shall be 18 SWG heavy gauge sheet steel of suitable design to receive conduits. The box shall be painted inside and outside with black enamel paint over a base coat of red oxide primer paint. The minimum length of inspection box shall not be less than four times the cable manufacturer's recommended Bending radius of the cable. All concealed type pull boxes shall have a white plastic sheet of appropriate size fixed to the box by means of galvanized screws.

Adaptable boxes shall be 18 SWG sheet steel and painted and finished

to the same quality as the Lighting distribution boards.

Wherever the conduit lengths cross the expansion joint either along the columns or slab suitable arrangement shall be provided so that when the conduit lengths in the expansion joint are stressed the conduit shall not crack or break.

4.5.2. PVC Pipe

Rigid PVC pipes shall be installed under roads and paved areas, at crossing with other services and at cable entering building as shown on the drawings. The depth of the pipe shall vary according to the conditions at site, and approval of Engineer shall be obtained prior to installation. In general the pipes shall be installed underground at the following depths measured from the top of the pipe:

a)	Under roads and paved surface	900 mm below the finished surface
b)	When crossing other services for the crossing length	250-mm vertical clearance 500 mm horizontal clearance with CC protective cover.

The trench of required dimensions shall be excavated and the bottom of trench cleaned and leveled. A Four-inch thick bed of fine sand shall be provided over which the PVC pipes installed after proper alignment. Where two or more pipes are installed in the same trench the clearance between pipes shall not be less than Two inches. After laying of pipe the trench shall be backfilled with clean-screened earth in layer of Four inches. Each layer shall be properly compacted.

Where underground cables enter connection terminal boxes the PVC pipe shall be installed on surface by means of PVC clamps at a maximum interval of Eighteen inches.

After installation, the ends of the pipe shall be plugged with material impervious to water and chemicals. All joints shall be sealed adequately to prevent entry of foreign elements.

The installation of pipes shall be completed in all respects including its fixing at terminations, before cabling work is started. All sharp edges and burrs shall be removed by using reamer or any approved device. The pipe shall be thorough cleaned of dirt and dust from inside. the pipes shall be installed in proper co-ordination with other works.

4.6 MEASUREMENT AND PAYMENT

4.6.1 General

The Contractor's bid amount against each Bill of Quantities item as given below shall include supplying, installation and completion for all work specified herein and as shown on the Tender drawing related to the item.

4.6.2 PVC Conduits

4.6.2.1 Measurement

Measurement shall be made for the number of running feet or running metres of conduits acceptably supplied and installed by the Contractor as a complete unit.

4.6.2.2 Payment

Payment shall be made for the total numbers of units measured, as provided above, at the Contract unit price each. The payment shall constitute full compensation for supplying, installing and completion of the laying of the conduits including jointing materials and accessories. The complete work wherever applicable shall include cutting/ chasing of civil work, for concealed conduit system, excavation and backfilling of ground for underground pipes painting, plugging, bitumen coating, etc., as applicable for each type of work.

4.6.3 PVC Pipes

4.6.3.1 Measurement

Measurement shall be made for the number of running feet or running metres of pipes acceptably supplied and installed by the Contractor as a complete unit.

4.6.3.2 Payment

Payment shall be made for the total numbers of units measured, as provided above, at the Contract unit price each. The payment shall constitute full compensation for supplying, installing and completion of the laying of the PVC pipes including jointing materials and accessories.

5.0 LT CABLES

5.1 DESCRIPTION

The cable manufacturer shall be certification holder of ISO-9002 and shall be approved by the Engineer. The cables for road lighting shall be PVC insulated and PVC sheathed, 600/1000 Volt grade, designed, manufactured and tested in accordance with IEC-60502 or other equivalent international standards.

For lighting system the cables shall be single or multicore as required with stranded copper or aluminum conductors and polyvinyl chloride heat and moisture-resistant insulation of the thickness listed in IEC or British Standard.

The route of the cables shall be as shown on the drawing. Any change in route required due to site conditions shall be made in relation with other service layout and with the approval of the Engineer.

5.2 MATERIAL REQUIREMENTS

The cable shall be suitable for operation at conductor temperature upto 70° C under normal conditions.

Conductors shall be of high purity electrolytic annealed copper or aluminum wires and shall conform to the requirement of the following BS or equivalent standard.

If armouring is required it shall consist of galvanized steel wires complying with BS 1442 and shall provide conductivity not less than 50% of the phase conductor.

BS 6746:	-	PVC insulation and sheath of electric cables
BS 6360:	-	Copper or Aluminum conductors in insulated cables and cords
IEC 60228:	-	Conductors of insulated cables

5.2.1 Cable Sizes

The sizes of LT copper conductor cables shall be as shown on the drawings. Care shall be taken so that voltage drop at the far end of the cable does not exceed 5% of the nominal voltage. Cables manufactured by the reputed firms shall be used, provided they fulfill all the requirements of the specifications.

5.2.2 Phase Identification

All cables shall have phase identification colour on the insulation of each core. The colour code of three phase circuits shall be red, yellow and blue for phase conductors and black for neutral conductor. From pole junction box upto lantern green or green and yellow striped PVC insulated wire shall be used as earth continuity conductor (ECC).

For all cables, to be supplied and installed, the Contractor shall submit complete technical data, including conductor material, insulation material, current carrying capacity, Voltage grade, weight for 100

metres etc. and all such data shall be supported by test certificates, current and temperature rise curves etc. for approval of Engineer.

5.2.3 Cable Accessories

All accessories shall be provided without additional cost for the complete cabling and wiring system. These shall include but not be limited to items such as clamps, fixing channels, connectors, cable joints (where necessary and as approved by the Engineer), clips, lugs, tapes, solders, identification tags, bushes & glands etc.

5.2.4 DATA TO BE SUBMITTED

The Contractor shall submit the following for approval of the Engineer before execution:

- Manufacturer
- Country of Origin
- Catalogue with indication of equipment proposed
- Detailed Specification
- Construction drawings

Compliance of the following shall be required:

1) In–process testing and tests after manufacturing (each size/type) to be supplied, as per national and international standards (as applicable) specified particularly for the project for which the cable will be ordered, including but not limited to:

   a) Single / Multi-core Cable Manufacturing as per applicable BS or IEC standards schedule of testing.
   b) Tests on completed cables in accordance with BS standard 6004 & BS 6346 or equivalent IEC standard / codes.

2) Routine tests shall be carried out from independent laboratory in the presence of Client / Consultant representatives. Review/approval of these test reports shall be carried out by the Client/Consultants.
3) In advance availability of sources / supporting documents with regard to material sources vis-à-vis imported Copper (in accordance with the mandatory requirements of imported copper laid down in the market input rates of material, Finance Department, Government of the Punjab), PVC used in the manufacturing of the cables ordered for a particular project including sales tax invoices from the respective material source and reconciliation quantity of the material procured with the

manufactured cables. The import documents of material should consist of the following:

- Bill of exchange.
- Commercial invoice.
- Packing list.
- Beneficiary certificate.
- Test report of Material (Copper Rod).
- Shipment advice.
- Bill of lading.
- The vendor from which imported copper is purchased should be approved / registered with LME

4) Certificate of Registration from the client shall be submitted.
5) Cable inspection test protocol/procedure shall be furnished.
6) Pre-shipment / delivery inspection shall be carried out at Manufacturing Works of the cable manufacturers.
7) The samples from the cable drums supplied at site shall be taken and collected by the contractor in the presence of Client/consultant representatives for testing of same from UET or PCSIR Lahore in line with applicable standards / codes and test report of the same shall be submitted accordingly.

5.3 CONSTRUCTION REQUIREMENTS

Power supply to the poles at the road crossing shall be with PVC insulated PVC sheathed cable passing through pipe as specified and as shown on the drawings. Individual pole connections shall be by means of the power supply cable looping between poles. The cable from lighting control box shall enter first lighting unit at its three phase and neutral service cut-out and then similarly looped to the next. The luminaries on each pole shall be connected alternately to each of the three phases.

Cable routes shall consist of trenches or 100 mm PVC pipe as suitable or as shown on the drawings. The cable if laid in trench shall be at least 500 mm below the general ground and 750 mm below road (class-1) level, with sand cushion around cable and a layer of 230 mm wide bricks over sand along the entire route of cable. The bricks shall be laid in such a way to provide equal margin of cover on both sides of the cable.

Slack shall be left in cables for which purpose the cut lengths of cables shall allow about 3% more in the measured length between terminations (Engineer will verify the lengths of cables). At junction boxes, ample slack shall be left to prevent straining of cable joints due to settlement of cable trench.

For underpass luminaries PVC insulated, PVC sheathed, SWA cable shall be pulled through already laid/buried PVC pipes in underpass slabs. The pulling of cables through pipes shall be started only after the conduit (PVC) system is completely installed and all outlet boxes, junction boxes etc. are fixed in position. The cable shall be pulled in PVC pipes with care, preferably without the use of any lubricant. Where necessary, and after approval of Engineer, the cable manufacturers recommended lubricant shall be used. Use of any kind of oil or soap will not be permitted.

The wiring shall be continuous between terminations and looping-in system shall be followed throughout. Any joint in cables shall not be allowed. Slack shall be left in cables for which purpose the cut lengths of cables shall allow about 3% more in the measured length between terminations (Engineer will verify the lengths of cables). At junction boxes, ample slack shall be provided to facilitate repairs in future.

Cables, whether installed in bare ground or in pipes shall not be bent to a radius less than that recommended by the cable manufacturers.

Upon completion of cable installation, the Contractor will be required to undertake testing as approved by the Engineer or the concerned department and shall comply with IEE wiring regulations. The copies of test results shall be supplied to the Engineer.

Conduits/ pipes/ ducts for electrical cables shall be properly sealed with the water proofing material "Plastic Polyurethane Foam" as per relevant ASTM standard to avoid rain water entry to the conduits. The contractor shall also provide the technical data of the sealant material before the execution of the work.

5.4 MEASUREMENT AND PAYMENT

5.4.1 Measurement

Measurement shall be made for the number of running meters for each size and type of cable complete with required accessories acceptably supplied and installed by the Contractor. For 2.5 mm^2 cable from junction box to lighting fitting lamp holder through hollow of pole, it shall be on each cable basis.

5.4.2 Payment

Payment shall be made for the number of running metres of each size of cable measured as provided above, at the contract unit price each and shall constitute full compensation for supplying, installing, connecting and commissioning, of the cables. Payment for 2.5 mm^2 cable from junction box to lighting fitting lamp holder shall be lumpsum on each cable basis.

6.0 LIGHTING CONTROL PANEL

6.1 DESCRIPTION

The lighting control/distribution panel shall be of 14 SWG sheet steel fabricated, cubical type, totally enclosed, dust tight and vermin proof. These shall be complete in all respects with material and accessories, factory assembled, tested and finished all according to the specifications and to the normal requirements. The panel with all components and accessories shall be suitable for front operation and shall;

- be provided with adequate clearance from live parts so that flashovers cannot be caused by switching, vermins, pests etc.
- have all components rated for insulation class of 600 Volt minimum.
- have the components mounted so as to facilitate ease of maintenance from the front.
- be suitable for mounting on concrete foundation.

The lighting control panel shall be complete with detachable steel base frame for embedding in concrete foundation on site.

6.2 MATERIAL REQUIREMENTS

The road lighting control box shall be of 14 SWG, G.I. sheet and equipped with the following:

- One-set of three phase, neutral and earth busbars of rating as specified (site rating).
- One incoming moulded-case circuit breaker, breaking capacity & rating as specified.
- Outgoing circuit breakers, breaking capacity & rating as specified.
- Magnetic contactors as per rating specified.
- Photo-electric cell switches dust and water proof type and as per BS 5972 or WAPDA Specifications P-102 with upto date amendments.

One photo electric cell unit shall be provided to switch ON/OFF every contactor for control of lights. Photo-electric unit shall include a delay device to prevent the switching of lamps during transient changes in voltage. Each lighting circuit shall be equipped with Auto/Manual selector switch and ON/OFF push buttons for maintenance purpose without interference with the photo cell and the whole to be enclosed in the dust and vermin proof case. Since the lighting control panel is installed on road side, therefore its outer

cover shall be plain, without electrical components. A brass batten holder with ON/OFF switch and 60 watt incandescent lamp shall be provided at suitable location in the panel to facilitate maintenance during night time. Doors with hinges shall be provided so as to give maximum access for cabling and maintenance and shall be fitted with lock. Three sets of keys shall be supplied along with road lighting control box.

All necessary interconnecting wiring within the control panel shall be carried out in the factory.

Cable glands and lugs shall be provided. Three sets for incoming outgoing 4-Core up to 35 mm^2 Copper conductor PVC/SWA/PVC cables.

A suitable earthing terminal shall be provided inside the box.

Crimping type lugs for incoming and outgoing copper cables shall be provided.

6.2.1 Moulded Case Circuit Breakers

Moulded Case Circuit Breakers shall be provided for each distribution feed circuit. The circuit breakers shall be in accordance with IEC 60947-2. The three phase fault level shall be in accordance with the circuit requirements. The I_{cu} of all MCCBs shall be equal to 100% of I_{cs}. All MCCBs shall be capable of operating at 50 ^oC.

Each circuit breaker shall have integral thermal overload and magnetic type short-circuit trip devices. The thermal release shall provide inverse time overload tripping and the magnetic release shall provide instantaneous tripping or short time delay tripping where necessary, to achieve discrimination with downstream protective devices during short circuit conditions.

6.2.2 Magnetic Contractors

The contactors shall be triple pole, 400 V continuous duty type. The main contacts shall be silver tipped, but type with double break per pole. Each contactor shall be provided with 230 V AC single phase operating coil, and minimum two normally open and two normally closed auxiliary contacts wired upto terminals. But if more number of working auxiliary contacts are required then, these shall be provided according to the system requirements.

6.2.3 Indicating Lamps

Indicating lamps shall be suitable for flush mounting, complete with base and shall have rosettes of suitable colour.

6.2.4 Line-up Terminals

Line-up terminals wherever provided for control & power circuits shall be suitable for voltage and size of conductors as indicated on drawing.

The line-up terminals for controls shall be suitable for channel mounting. All necessary accessories such as end-plates, fixing clips, transparent label holder caps and label sheets with marking shall be provided.

6.2.5 Data to be Submitted

The Contractor shall submit the following for approval of the Engineer before execution;

- Manufacturer
- Country of Origin
- Catalogue with indication of equipment proposed
- Detailed Specification
- Construction drawings
- General arrangement and proposed foundation details.
- Details of materials used for weather and dust proofing.

6.3 CONSTRUCTION REQUIREMENTS

The road lighting control panel box shall be installed near transformer at location shown on the drawing. The Contractor shall ensure coordination with the civil contractor to avoid damage to the completed works. The Contractor shall provide foundation bolts and grout them in cement concrete with the approval of the Engineer. All installation material required for the satisfactory erection, such as bolts, nuts, washers, supporting steel etc. shall be provided and installed by the Contractor. The panel shall be installed upright and in level and shall be firmly and rigidly fixed on the concrete supports. Panel shall be erected as per manufacturer's instructions and as approved by the Engineer.

Loose parts dispatched by the manufacturer, shall be installed and connected as per assembly drawing. Any safety locking of metres, relays etc. provided by the manufacturer, for safe transport shall be released only after the panel is installed in position. The Lighting Control Panel shall be tested and commissioned in the presence of the Engineer.

Panel openings for cables shall be properly sealed with the water proof material “Plastic Polyurethane Foam” as per relevant ASTM standard to avoid rain water/animal entry to the panel. The contractor shall also provide the technical data of the sealant material before the execution of the work.

6.4 MEASUREMENT AND PAYMENT

6.4.1 Measurement

Measurement shall be made for each panel complete with all components and accessories as given in bill of quantities acceptably supplied and installed by the Contractor as completed job.

6.4.2 Payment

Payment shall be made for the number of panels measured as provided above at the contract unit price each and shall constitute full compensation for supplying, installing, connecting, testing and commissioning of panels including bolts, supporting steel base, nuts, washers, tapes and earthing etc.

7.0 EARTHING

7.1 DESCRIPTION

Earthing system as shown on the drawing shall be installed by the Contractor. The earthing system shall give earth resistance, including the resistance of soil, earth leads and ECC, equal to or less than one ohm.

7.2 MATERIAL REQUIREMENTS

7.2.1 Earthing by Earth Rods

The earth rod shall be of steel and shall be protected against rusting by a thick exterior layer of copper (not less than 0.33 millimeter), permanently molted or electrolytically deposited on a high strength steel core which shall provide rigidity for easy driving without bending. The earth rod shall have nominal dia of 16 mm with chamfered head of 2x45 mm (chamfer). The overall length of the rod shall be 3000 +5 mm.

7.2.2 Earthing Lead

The copper conductor used for earth wire shall conform to the latest revision of IEC 228, IEC 228A. The size and number of individual conductor shall be as specified in the applicable standards.

7.2.3 Earth Continuity Conductor

Earth continuity conductor (ECC) shall be hard drawn bare copper wire, or single core PVC insulated copper conductor cable of given size. The earth continuity conductor shall be connected at one end to the earth rod through switch clamp/eye bolts as shown in the drawings at the other end to the relevant equipment to be protected as mentioned in the specification, BOQ and shown on drawing.

The specifications for single core PVC insulated cables used as ECC shall be same as those in relevant sections of technical specifications.

7.2.4 Data to be Submitted

The Contractor shall submit the following for approval of the Engineer before execution;

- Manufacturer
- Country of Origin
- Catalogue with indication of equipment proposed
- Detailed Specification
- Construction drawings

7.3 CONSTRUCTION REQUIREMENTS

7.3.1 General

For earthing of equipment proper size copper or brass thimbles or lugs shall be used to which the copper wire shall be connected by copper brazing. The soldering of copper wire at joints or terminations shall not be allowed. All tee-off connections shall be by copper brazing using suitable socket and clamps. After brazing, the jointed surface shall be protected by oxide inhibiting compound of low electrical resistance. For connections to metallic body, the surface shall be thoroughly cleaned before bolting the lug or socket.

The earth continuity conductor shall, in general, run in cable trench or in conduits/pipes. Where laid along underground cables, these shall be laid directly underground in unpaved areas and in pipe under paved areas.

7.3.2 Earth Continuity Conductor

The body of all lighting control panels shall be connected to earth by specified size of ECC. All other metal work shall also be connected to earth by suitable size of ECC so that earth resistance is less than five ohm.

At joints or terminations, the ECC shall be connected using proper accessories. No connection shall be made by twisting of earth conductors.

7.3.3 Earth Resistance Test

Earth resistance tests shall be done on the earthing system by separating and reconnecting conductor. The resistance of earthing leads in the installation shall not exceed one ohm.

Earth resistance test shall be performed as per Electrical Inspector's requirements.

7.4 MEASUREMENT AND PAYMENT

7.4.1 Measurement

For earth continuity conductors (ECC) measurement shall be made for each size of copper wires on per running meter basis acceptably supplied and installed by the Contractor.

7.4.2 Payment

Payment for copper rod type earth point shall be made for each point and provided as above at the Contract Unit price each and shall constitute full compensation for supplying, installing, connecting and testing including earth rod, excavation, backfilling, civil work for inspection chamber, etc. as shown on the drawings. Payment of earth continuity conductors (ECC) shall be made for the number of running meters measured at the Contract unit price and shall constitute full compensation for supplying, installing & connecting including all installation accessories.

SECTION – 17: SCADA AND TELECOM WORKS

1.0 CCTV SYSTEM

The scope of works shall include the design, supply, installation, testing and commissioning of following systems:

1) IP based Video Surveillance System (CCTV System)
2) Communication Service Cabling Network Infrastructure for CCTV system

1.1 IP BASED VIDEO SURVEILLANCE SYSTEM (CCTV SYSTEM)

1.1.1 SCOPE OF WORK

The scope of work shall include the design, supply, installation, testing and commissioning of IP based video surveillance system complete with associated electrical and communication wiring works, control equipment, Network Video Recorders (NVRs), mounting brackets and accessories. The Contractor shall be responsible for providing complete turnkey system solution including auxiliary equipment for best quality of service, and all such equipment with accessories shall be deemed to be included in the scope of Contractor and no extra payment shall be made to the Contractor for these. The system shall include but not limited to NVRs Outdoor Fixed type cameras, LED screens, wiring, termination, electrical boxes, and all other necessary material for a complete operating system. The contractor shall have to visit the site to take physical dimensions of hoist way, pits overhead and machine room to verify their horizontal / vertical lengths etc. before submission of proposals. The bidders may raise the queries for any clarification, missing information or ambiguity if any, within one week after issuance of tender documents. Any work to be carried out by the owner / main contractor, should be mentioned clearly along with the bid, otherwise no claim against extra work shall be acceptable. Specification, Drawings and BOQ etc. should be read carefully to comply with specified loads, serving landings and other general and special safety features. Any deviation from specification / BOQ should be mentioned well in time before submission of bid.

The CCTV System works are to be performed; the requirements given in the Technical Specification shall be fulfilled. The Contractor shall be responsible and provide the following:

- Monitoring and control of CCTV equipment in different areas.
- All the Major equipment e.g. Cameras, NVR, Poe+ Managed Switch, Client Workstation, and Storage backup device shall be provided from the same manufacturer.
- CCTV Surveillance System to remotely control, Open Standard, and transmit information regarding status of each camera from the Site to Control station.
- Video Display Unit (VDU) at the Control station located at Superintendent office.
- Provide the necessary hardware and software for above System.
- All software packages shall be provided in original installation media along with their licenses.

- Preparing an Engineering Design Report covering at least the following subsystems:

  1) Detailed Drawings for the CCTV Camera Surveillance System showing all Coverage areas of the project.
  2) Schematics and interconnection diagrams of complete CCTV system showing CCTV surveillance system components including cameras and camera controllers and other elements to monitor and control the processes outlined above.
  3) The exact quantities and types of hardware and software required.
  4) Technical details of the hardware and software of the complete systems.
  5) Cable and conduit schedules and routing plan.
  6) Details of any civil works required.
  7) Detailed description of the data acquisition software, user configurable functions and software features to be provided.
  8) Complete details, brochures and pictures of the proposed area.
  9) Installation, testing and commissioning procedures and methodology.

- Procure, transport and deliver equipment and hardware to site, after approval of the above report(s) by the Engineer.
- Design, Install, test and commission of CCTV surveillance system in accordance with the procedures given in the engineering design report. No payment shall be made without approval of equipment.
- Provide training to the Employer's personnel.
  Bidder shall submit with his bid the following Documents/Data for all system equipment including fixed camera, NVR, Network Data Switch, SFP module:
- Brochures and data sheets of each equipment
- Block diagram of CCTV system including OFC showing interconnectivity of all CCTV equipment including connection of cameras, NVR, Data Switches and LED Video display unit with LAN.
- Detail of Cabinets.
- Field of view showing coverage area of each camera.
- Test standards and design.
- Backup calculations showing that Hard Disks shall be able to record data of all cameras for a period of one Month.
- End user certificates.
- International Standards Reports/Certificates

1.1.2 STANDARDS

All equipment shall be of imported origin. Equipment design and manufacturing shall be only from Europe, USA and/or from the list of mentioned brands at the end of these specifications. Materials/Equipment shall be designed, manufactured, tested and installed according to the BS/IEC/ISO/ITU/EN/CE Recommendations. The latest edition and amendments shall apply in all cases. As a minimum, following shall be applied:

a. EN 55022:2010 Information technology equipment– Radio disturbance characteristics– Limits and methods of measurement.

b. EN 60950-1:2006/A11:2009/A1:2010/A12:2011/A2:2013 Information Technology equipment – Safety – Part 1: General requirements.
c. EN 55032:2015 Electromagnetic compatibility of multimedia equipment – Emission requirements.
d. IK 10, BS EN 62262:2002: Degrees of protection provided by enclosures for electrical equipment against external mechanical impacts (IK code)
e. BS EN 61000-3-3:2013: Electromagnetic compatibility (EMC). Limits. Limitation of voltage changes, voltage fluctuations and flicker in public low-voltage supply systems.
f. EN 55024:2010+A1:2015: Information technology equipment. Immunity characteristics. Limits and methods of measurement
g. EN 61000-3-2:2014: Electromagnetic compatibility (EMC). Limits. Limits for harmonic current emissions.

1.1.3 GENERAL SPECIFICATIONS

- Proposed CCTV system shall be an open standard based integrated system with IP network centric functional and management architecture aimed at providing high-speed manual / automatic operation for best performance.
- System shall use video signals from various types of outdoor CMOS color cameras installed at boundary wall and entry/exit gates, process them for viewing on workstations/monitors at Control station and simultaneously record all the cameras after compression using H.264/H.265 or better standard.
- System shall have combination of CMOS Color Video Cameras with individual IP address with Fixed Lens, Network Video Recorders (NVR/CAMERA), Storage for recording, Application software, Color Video Monitors.
- Mouse-Keyboard, software based Video Matrix Switcher, workstation for System Administration / Management / Maintenance etc.
- Network Video Recorder shall offer both video stream management and video stream storage management. Recording frame rate & resolution in respect of individual channel shall be programmable.
- System should ensure that once recorded, the video cannot be altered; ensuring the audit trail is intact for evidential purposes.
- System shall provide sufficient storage of all the camera recordings for a period of one month or more @ 30 FPS, at H.265, H.264, MPEG or better quality using necessary compression techniques for all cameras (extended capacity of cameras i.e. present capacity + 25 %).
- System shall use a combination of IP enabled fixed cameras. The video shall be compressed using H.265, H.264 / MPEG-4 or better standard and streamed over the IP network.
- The recording resolution and frame rate for each camera shall be user programmable.
- The Area under surveillance shall be monitored and controlled from control station through workstations.
- All the Major equipment e.g. Cameras, NVR, PoE+ Managed Switch, Client Workstation, and Storage backup device shall be provided from same manufacturer.
- Cameras shall be installed on poles/walls as per requirement. Poles of 5m shall be installed.

1.1.4 SYSTEM REQUIREMENTS

- Fixed focus IP cameras shall be 5MP resolution with Motorized lens
- Outdoor camera housing shall be of IP 66 or better rating. These must be integrated by the camera manufacturer.
- System must provide built-in facility of watermarking or Digital certificate to ensure tamperproof recording so that these can be used as evidence at a later date, if so desired.
- All camera recordings shall have Camera ID & location/area of recording as well as date/time stamp. Camera ID, Location/Area of recording & date/time shall be programmable by the system administrator with User ID & Password.
- Facility of camera recording in real-time mode (30 FPS)/15/12.5/10 or lower FPS as well as in any desired combination must be available in the system.
- System to have facility of additional camera installation beyond the originally planned capacity.
- In order to optimize the memory, while recording, video shall be compressed using H.265, H.264 or better standard and streamed over the IP network.
- System shall be triplex i.e. it should provide facility of Viewing, Recording & Replay simultaneously.
- The offered system shall have facility to export the desired portion of clipping (from a desired date/time to another desired date/time) on CD or DVD or USB Storage. Viewing of this recording shall be possible on standard PC using standard software like windows media player etc.
- System shall have provision of WAN connectivity for remote monitoring.

1.1.5 FIELD OF VIEW SHOWING COVERAGE AREA OF EACH CAMERA

The following field of view details shall be provided using professional surveillance softwares:

- Field of View seen by camera and lens, for any sensor size or aspect shape (film or digital).
- Both the dimensional size of the Field of View seen at a specified distance, and also Angle of View (degrees, which is independent of distance) using software.
- Field of view shall use computing dimensional field of view size at some specific distance, like at the subject distance.

1.1.6 WARRANTY

The Contractor shall provide warranty for all equipment for a period of three (03) years through authorized local distributor commencing the hand-over and acceptance date to the Employer. No equipment shall be accepted without warranty certificate from the manufacturer. It shall cover all costs for WARRANTY SERVICE, including parts replacement, labor, prompt field service, pick-up, transportation, and delivery. No extra cost shall be admissible for Warranty services.

1.1.7 FUNCTIONAL / EQUIPMENT DESCRIPTION

1.1.8 IP Based OUTDOOR FIXED BULLET CAMERA

The outdoor fixed camera should have the following features:

Image Sensor

- 5 MPX CMOS sensor 1/2.7”
- Number of Effective Pixels 2592 (H) x 1944 (V)
- Min. Illumination0.017 lx/F1.4 - color mode,0 lx (IR on) - B/W mode
- Electronic Shutter auto/manual: 1/3 s ~ 1/100000 s
- Wide Dynamic Range (WDR) (double scan sensor), 120dB
- Digital Noise Reduction (DNR) 2D, 3D
- Defog Function (F-DNR)
- Highlight Compensation (HLC)
- Back Light Compensation (BLC)

LENS

- Lens Type motor-zoom, f=2.8 ~ 12 mm/F1.4
- Auto-focus zoom trigger, day/night mode trigger

DAY/NIGHT

- Switching Type mechanical IR cut filter
- Switching Mode auto, manual, time

NETWORK

- Stream Resolution 2592 x 1944, 2592 x 1520, 2560 x 1440 (QHD), 2304 x 1296, 1920x 1080 (Full HD)
- Multi streaming Mode
- Video/Audio Compression H.264, H.264+, H.265+, G.711
- Network Protocols Support
- HTTP, TCP/IP, IPv4, IPv4/v6, UDP, HTTPS, Multicast, FTP, DHCP, DDNS,
- NTP, RTSP, SNMP, QoS, IEEE 802.1X, PoE.
- ONVIF Protocol Support Profile S/G

OTHER FUNCTIONS

- Privacy Zones video mask type
- Motion Detection
- Region of interest (ROI)

Video Intelligent Analysis (VIA)

  - tamper,
  - abandoned object,

- object disappearance,
- line cross,
- zone entrance,
- object counting,
- multi loiter,
- face detection,
- Scene Change,
- Video Blurred,
- Video Color Cast

- System Reaction to Alarm Events
- Face Recognition Advance analytic Function
- e-mail with attachment, saving file on FTP server, saving file on SD card

IR LED

- Smart IR Range 50 Meter

INTERFACES

- Audio Input / Output
- Memory Card Slot microSD - capacity up to 128GB

INSTALLATION PARAMETERS

- Degree of Protection IP 67
- Enclosure aluminum, with wall mount bracket in-set
- IK10 impact rating
- Power Supply POE,
- Operating Temperature -30°C ~ 60°
-

1.1.9 Network VIDEO MANAGEMENT AND RECORDING SYSTEM

The Video Surveillance Management platform shall be optimized for applications to view, store, and manage real-time and recorded video in a networked environment. The system shall use an open suite of URL-based programmatic interfaces to communicate with applications. The system shall provide a highly scalable and reliable platform to enable customized, network-based surveillance applications. The Video Surveillance Management platform shall include but not limited to the minimum of the following features/functions/specifications:

- The system shall display any combination of live and recorded camera feeds on multiple workstations simultaneously using an IP network.
- The system shall provide low latency video with high quality images and support H.264, H.264+, H.265, H.265+, MPEG-4, and Motion-JPEG compression schemes simultaneously.
- The system shall provide replication of individual video feeds at different frame rates for multiple users and other system processes.

- The system shall support simultaneous video feeds across multiple locations for centralized and decentralized storage, display, and distribution of video without limitation, but shall minimize load on video servers by streaming only the active video channels.
- The system shall be capable of streaming and recording video at different bit rates and variable frame rates up to full motion.
- The system shall provide the ability to remotely configure the cameras and shall allow configuration data to be imported from a spreadsheet.
- The system shall allow instant replay of video and will permit pausing of live video, forward and backward review of recorded video, and return to live viewing.
- The system shall manage storage of real-time video at any specified frame rate, duration, and physical location on the network.
- The system shall provide flexible archiving capability in terms of frame rate, duration, and location and shall utilize dynamic file allocation to ensure that the full duration of the selected video stream will be recorded, regardless of lighting condition, motion, or scene detail.
- System shall support access to the archived video, to seek to any point in the archive, to set the pre and post time, and to loop that segment of the archive.
- The system shall cater for redundant multi-site video storage. The video feeds coming from the sites must be stored on primary and backup storage.
- The system shall provide a Management Console that shows the status of Memory, Disk Usage, and traffic analysis.
- The system shall provide for integration with other software applications through an open and published Application Programming Interface (API). Such applications shall include, but not be limited to, access control, video analytics, and other alarms and sensor inputs.
- The system shall provide for or have the capability of interoperating with the functional modules providing the capability for multiple web-based display consoles to configure, manage, display, and control video throughout the IP network; multiple options to store video and audio; virtual matrix switching; client PC viewing; and, remote encoding and storage.
- The system shall be capable of (ONVIF) simultaneously supporting 3rd party IP based cameras from a variety of different vendors.

  NVR shall have following features:

  - Supported protocols: ONVIF, RTSP
  - Supports resolution up to 3840 x 2160
  - Recorded stream size: 256 Mb/s in total from all cameras
  - Supports up to 3 monitors simultaneously
  - disk mounting: 8 x S-ATA 3,5 or higher"
  - Operating system: Microsoft Windows 10 IoT
  - Recording and surveillance system: VMS (Video Management System)
  - Integration with Access Control System.

The system shall provide the following administrator functionalities:

- Secure login

- Server, encoder, and camera administration
- Scheduled and event-based video recording
- User and role management
- Fine-grained activity reports and system audit
- Ability to push pre-defined views to any number of digital monitors with Virtual Matrix
- Ability to schedule to operator shifts, event filters, temporary views

The CLIENT STATION running as part of the Video Management System shall provide the following operator functionalities:

- Secure login
- Flexible video displays
- Create instant recordings, "Record Now"
- Client-side video enhancements (adjusting brightness, color, transparency, etc.)
- Instantly swap between live and archive video of the same camera feed
- Archive review and clipping
- Event notifications
- Ability to search archived video based on motion within a predefined window within the video frame
- Synchronize playback of multiple archives

Supported file format types shall include:

- WMV - A standard file format for downloading and playing audio/video data or to stream data on a PC.
- AVI - A standard file format for storing audio/video data on a PC.MP2
- Clip (BWM) - A segment of video extracted from an existing stream-able archive.
- Digitally Signed Clip (BWX) - A segment of video extracted from an existing stream-able archive and signed with a digital signature to verify content has not been tampered with.

1.1.10 FLAT SCREEN

Flat Screen (40" Full HD LED display) shall be installed in superintend room as shown in drawings including all connecting cords and mounting stands.

1.1.11 STANDARD 5M POLE FOR CAMERA

- The standard pole should be 5M high of 225 mm dia at bottom and 100mm at top. The base plate shall be 600mm x 600mm, 20mm thick with 6 Nos. thickeners and junction box including paint.
- The camera poles of 7 meters height with necessary accessories for camera mounting.
- The camera poles shall be made up of Mild steel and (hot dipped) galvanized to 100 microns thick or higher.
- Painting shall be done by means of spray after galvanization as specified by the user at the field.

- Thickness: 6 inches
- There shall not be any joints in the poles.
- Concrete foundation shall be prepared with a mixture of concrete, sand and pebbles in 1:1:2 ratios by the supplier.
- The foundation shall be of Reinforced Concrete. Backfilling should be well compacted. The poles shall be fixed on the concrete platform with suitable bolts and these bolts shall be galvanized of 100 microns thick or higher.
- Suitable 'J' bolts (4 No.s/pole) of size 600 mm shall be embedded in the concrete foundation, which in turn will be used to connect the pole.
- Provision shall be made in the pole to route the cable inside the pole. Suitable PVC conduit shall be placed inside the concrete foundation to route the cables.
- Lightening arrester rod at the top of the poles shall be provided.
- Position of the cameras shall be finalized in consultation with user department during the installation stage.

1.1.12 GALVANIZING

All poles shall be galvanized as described herein. Galvanizing shall be carried out by the hot-dip process. The zinc coating shall be smooth, continuous and uniform. It shall be free from acid spots and shall not scale, blister or be removable by handling or packing. There shall be no impurities in the zinc or additives to the shelter bath, which could have a deleterious effect on the durability of the zinc coating. Before pickling, all welding, drilling, cutting, grinding etc. shall be completed and all grease, paint, varnish, oil, welding slag etc. completely removed. All protuberances, which would affect the life of galvanizing, shall also be removed. Parts shall not be galvanized if their shapes are such that the pickling solution cannot be removed with certainty or if galvanizing would be unsatisfactory or if their mechanical strength would be reduced. Any surfaces in contact with oil shall not be galvanized unless they are subsequently coated with an oil resistant varnish or paint. All welding works shall be carried out before the poles are subjected to galvanizing. It shall be preferable to carry out all welding cutting, machining or working on the poles prior to galvanizing.

1.1.13 STORAGE REQUIREMENTS

- Recording of all the camera streams must be stored for the period of one month.
- The storage media must be SATA drive.
- The supplier/ contractor to confirm the storage requirement as per number of cameras, pixel resolutions, video compression and number of 30 recording days.

1.1.14 SFP MANAGED DISTRIBUTION SWITCH

Features of SFP Managed switch shall be as follows:

- 8 ports SFP slot & 1 port 10/100/1000 Gigabit Optical Fiber Switch
- Auto negotiation function supports UTP ports to auto 10/100/1000M and Full Duplex/Half Duplex.
- The SFP slot supports 1000M and Full Duplex mode.
- Supports flow control and broadcast storm protection.
- Supports VLAN and QoS.

- Supports max 10K bytes frame.

1.1.15 8 Port POE ACCESS SWITCH

Features of 8 port POE access switch shall be as follows:

- 8/16/24*10/100/1000M* RJ45x2*SFP
- comprehensive security protection system to ensure long-term stable operation of the network
- rich QoS strategy and ACL access control function, multi service, efficient integration operation
- Port convergence and spanning tree protocol improve the ability of link redundancy backup
- Provide secure, flexible ways of providing Web, network management, CLI command line, SNMP, etc.
- provide network diagnosis, cable inspection, system logs and other functions, simple maintenance

1.1.16 OPERATOR WORKSTATION

The minimum configuration of the operator workstation shall be as per the following:

- Core i7 Ultra Slim Desktop PC
- 2TB HDD
- DVD Writer
- VDU
- Genuine Latest MS WINDOWS 10 Professional 64 bit pre-installed Operating System and associated software.

1.1.17 12U CABINET STANDALONE RACK

The 12U Data cabinet shall have minimum the following Features;

- Power Coated 3 No. Cooling Fans, Cable Manager
- Glass front door without vented hole
- Steel rear doors without vented hole
- Front and rear doors with elegant lock
- Front and rear door are free solder reinforcement structure
- 1 No. PDU 230VAC - 1 No, Cable Channel 100mm
- Earthing Strips 150mm H - 1 No,
- Door Lock - 1 No, Front Metal Band - 1 No. In the rack there must be maintained 1U = 1.75 inches' space.
- 6A, 220V socket link with UPS line
- Minimum Thickness: 2.00mm, mounting angle 1.5mm
- Earthing Bolts
- Degree of Protection: IP 42

1.1.18 27U CABINET STANDALONE RACK

The 27U Data cabinet shall have minimum the following Features

- Power Coated, 4 No. Cooling Fans, Cable Manager
- Glass front door without vented hole
- Steel rear doors without vented hole
- Front and rear doors with elegant lock
- Front and rear door are free solder reinforcement structure
- 2 No., PDU 230VAC
- Earthing Strips 150mm H - 1 No,
- Door Lock - 1 No
- 6A, 220V socket link with UPS line
- Minimum Thickness: 2.00mm, mounting angle 1.5mm
- Degree of Protection: IP 42

1.1.19 A4 COLOR LASER PRINTER

A heavy duty A4 size Color laser printer shall also be provided as per the below specifications:

- Print speed of 30PPM Black, 30PPM Color
- Print Resolution minimum 1200 x 1200 dpi
- Connectivity shall be USB 3.0 and Ethernet 10/100
- Duty cycle at least 8000pages per month
- Auto Duplex printing capability
- Paper trays for A4 paper; 250 sheets
- Low noise design for operation in the control room (noise level Equal/less than 45 dB (A).
- Temperature (operating) 5 - 45 ° C
- Relative humidity (operating) 15 - 85 % RH

2.0 GENERAL REQUIREMENTS FOR CCTV SYSTEMS

2.1 CODES & STANDARDS

The systems, installations and works shall be manufactured and executed in accordance with technical specifications, following the state of the art and the best techniques in use.

All equipment shall be designed, manufactured and tested generally in accordance with the latest revision of the standards laid down by the following institutions or other approved institutions, except where specifically directed otherwise:

Latest version of following codes and standards shall be applicable.

IEEE 802.1	VLAN, Rapid Spanning Tree protocol, Bridges identity-Based Network Services.
IEEE 802.1Q	Protocol for virtual LANs (VLAN) of network.

IEEE 802.3	Ethernet
ISO/IEC 11801-1	Information technology – Generic cabling for customer premises.
ISO/IEC/TR3 8802-1	Information technology – Telecommunication and information exchange between systems – local and metropolitan area networks – Specific requirements – Part 1 overview of Local Area Network Standard
EN 50173	Information technology – Generic cabling systems
EN 50174-1	Information technology – Cabling installation, Specification and quality assurance
EN 50174-2	Information technology – Cabling installation,
IEC 61000 – 3-2013	Limitation of voltage changes, voltage fluctuations & flicker in public low voltage supply systems for equipment with rated current equal to and less than 16 A per phase and not subject to connections
Dust and rain	IP 66 / 67 / 68 for outdoor cameras. Resistance
Salt mist	According to IEC 68-2-11 (for outdoor cameras)

The standards listed, as well as all other applicable codes and standards shall be used as "minimum" design standards.

2.2 CABLING STANDARDS

All Copper / Optical fiber cabling, components, connecting hardware, installation and testing shall be in accordance with the latest revision of the following standards:

ISO/IEC 11801: Information technology – Generic cabling for customer premises

ISO/IEC/TR3 8802-1: Information technology — Telecommunications and information exchange between systems — Local and metropolitan area networks — Specific requirements

ISO/IEC/8802-3: Part 3: Carrier sense multiple access with collision detection (CSMA/CD) access method and physical layer specifications

ISO/IEC 61935-1: Specification for the testing of balanced and coaxial information technology cabling – Part 1: Installed balanced cabling as specified in ISO/IEC 11801 and related standards

IEC 60364-1: Low-voltage electrical installations – Part 1: Fundamental principles, assessment of general characteristics, definitions

IEC 60950: Information technology equipment – Safety – Part 1: General requirements

EN50173: Information technology. Generic cabling systems. Office spaces

EN50174-1: Information technology. Cabling installation. Installation specification and quality assurance

EN50174-2: Information technology. Cabling installation. Installation planning and practices inside buildings

ANSI/TIA/EIA-568 – 568B: Commercial Building Telecommunications Cabling Standard

ANSI/TIA/EIA – 569: Commercial Building Standard for Telecommunications Pathways and Spaces

TIA/EIA TSB-72: Centralized Optical Fiber Cabling

TIA/EIA TSB-75: additional horizontal cabling practices for open offices

BICSI Telecommunication Method Manual: Telecommunications Distribution Methods Manual

IEEE 802.3: Ethernet Working

2.3 COMMUNICATION CABLES

All STP and fiber optic cables shall conform to ANSI/TIA/EIA-568-B Commercial Building Telecommunications Cabling Standard and ISO/IEC 11801 CLASS EDITION 2: 2002 CLASS E, AS/NZS 3080:2003 CLASS E(International) Generic Cabling for Customer Premises standard.

2.4 OPTICAL FIBER CABLE (OFC) NETWORK INFRASTRUCTURE

2.4.1 OFC CIVIL ROUTE DESIGN

OFC Civil route design will be in AutoCAD format, and should include:

- The construct route of this project.
- The civil work type, e.g. ducts, attachment, etc.
- The location where the work is to be performed.
- Legend showing the symbols used on the plans and the color-coding used to mark the plan.
- Identify the proposed cable installation method on each plan sheet such as hand, machine trenching, or directional bore, attachments. G.I pipe. Etc.
- Soil conditions.
- Surface conditions e.g. concrete pavement, asphalt, tuff tiles. Etc.
- Each 40 HDPE pipe shall accommodate one cable which should be pulled as per designed route.
- Coordination should be documented between the OFC to ensure that single points / paths of failure within the overall design have been identified

2.4.2 OFC SINGLE LINE DIAGRAM (SLD)

The OFC SLD should include:

- Sites/Pole name and ID
- Cable ID (Link ID)
- The HH number and location where has joint closure
- ODF rack fiber termination sequence
- The OFC cable type and cores
- Total OFC length between each two core sites
- The OFC length between each two adjacent joint
- The joint closures/ODF number and its location (coordinates)
- The splicing sequence of fiber in joints
- The link loss budget calculated at 1310nm and 1550nm for single mode fiber cable links.
- Indicate the length and type of cable proposed for installation on each page

2.4.3 OFC LINK LOSS BUDGET CALCULATION

All components such as additional connectors, and splices along with cable attenuation, should be taken into account in calculating the loss. The maximum length of any optical path between two fiber optic repeaters must be calculated separately, and depends on the total loss in all components used in the path, including Optic Fiber Cable, optical connectors, and splices.

Required parameters to be included in the link losses calculation:

Link losses	dB (Maximum loss)
Cable loss (for standard G.652-D SMF,@1310nm)	0.4dB/km
Cable loss (for standard G.652-D SMF,@1550nm)	0.3dB/km
Splice loss (for standard SMF)	0.1dB
Connectors loss	0.5dB

2.4.4 OFC CIVIL WORK

EXCAVATION AND BACKFILLING

Cable installation along boundary wall shall strictly observe the following requirements:

Cable trench depth should reach to 1.5m except obstructed by underground services, pipelines, facilities, big rocks etc. (Employer's approval required on all the obstruction which affecting depth to reach 1.5m).

In order to maintain a smooth bottom of trench to avoid a bumpy pipe shape, the level of the bottom trench should be maintained to a same depth level in the section between two adjacent hand holes.

Excavation and backfilling duration should be less or equal to 3 days. Excavation notification to the other utilities operators should be done at least 5 days before commencement.

The area around the handhole shall be compacted. Upon final acceptance of the conduit/duct system all handholes shall be free of debris.
Trenches should be backfilled to the original state and backfill shall be strong enough to support any kind of stresses.

The following operations shall be carried out after excavating the trench:

Remove spoils from the sides of the excavation (Spoil must be transported to authorized disposal sites in accordance with local authority requirements.)

Remove adjacent paving materials which were damaged as a result of excavation.

HANDHOLE

Hand hole shall be covered by a lid which is water penetration protected on which the size and the depth of the Hand hole are written.

Handhole lids shall be labeled with text: "OFC-M" and the size. OFC-H/H Means Optical Fiber Cable –Hand hole

Hand hole should be located outside of sidewalks and roadways if there is enough space for installation. In case there is no enough space outside and the man/hand hole installed on footway/road way edge, the top should level to ground surface.

Hand hole must be located a minimum of 2 meters off the edge of pedestrian way, and 3m from the off of the roadway if there is no space reserved for pedestrian way. In case of unavailability of the required clearance distance due to the soil or terrain condition; the request for shorter clearance shall be accompanied by pit test result approved by an engineer in charge of infrastructure from concerned institutions where the installation work will be conducted.

Hand hole shall not be located in the ditch line.

Hand hole can be pre-cast RCC structure. The Hand hole inner size is W*L*D=0.9M*0.9M*0.9M. For normally routes on the routes handhole will be used. For Pre-cast hand hole, below is the requirement:

- Concrete Ratio =1:1.5:3, target strength >2400 PSI
- Steel Bar=10 mm (min) used every 4 inches horizontally & vertically
- Thickness of Walls=4inches
- Entry holes should be made in advance in four walls
- Slab and cover should be same strength of material, which will be used for covering the hand hole.
- A factory serial number should be graved inside of the wall of hand hole

Pre-cast hand hole can be transported by truck, and crane should be used to load/un-load. The hand hole pit should be leveled at the bottom.

LAYING PIPE

The pipe should be laid straight at the center of the trench. And the pipe should not twist, squeeze or break. Couplers are must when doing the pipe junction work.

All new duct installations shall be provided on the basis of the number of conduits required for cable installation based on a 40% fill ratio, an additional spare conduit shall be provided on each new route.

Conduits allocated for cable installation as part of the Central Control Room installation shall be sub-ducted to maximize cable installation density and to ensure ease of cable installation without snagging. Sub-duct sizes shall be calculated by the contractor based on the fiber optic design and submitted to the client for approval prior to installation. Approved sub-duct products include any combination of solid wall smooth bore sub-duct and flexible fabric multi-cell product. All conduits shall be provided with a draw rope in preparation for cable installation, the rope shall be replaced whenever a cable is installed. In this project, will not use sub duct, we are using 40mm HDPE pipe multiway will be used as per the design.

WALL ATTACHMENT

When using duct type OFC, cable can be laid by wall attachment with PVC/ Corrugated PVC pipe/Corrugated GI pipe on the building / side wall to reach the site. The clamps should be fixed at every 1m interval. And at the turning point, corrugated PVC pipe is using to keep the bending diameter of OFC.

ENTRY INTO BUILDING

Ducts leading into buildings shall be sealed against the entry of gas, water and vermin.

WARNING TAPE

Visible tape marking shall indicate the Contractor/project name and cable depth. It shall be placed along the trenches 30 cm below ground surface.

A suitable red PVC tape 0.35 mm thick and 100 mm wide shall be placed for indicating the excavators of the presence of optical fiber cable. The translation of “WARNING! O.F. CABLE” in Urdu language and project name “PE-OFC” shall be printed on the tape in black letters 6 cm high and 2 cm wide at each one-meter interval. The color shall be red and tape shall be 200 to 250 meter in continuous length.

ROUTE MARKER

Surface markers to indicate the route of the cables shall be planted by the road sides/boundary wall. These markings shall be placed at intervals of between 100m to 300m.

The marker is made by concrete, its shape is rectangular parallelepiped, its size is 15cm*15cm*80cm. The concrete mix ratio is 1:2:4. The steel bar is grade 40 dia. = 5mm. The steel frame is made by 4 column steel bar and 4vertical rectangle steel.

The top 30cm of marker should be painted with RED painting. And a text of "PE-OFC" should be graved and painted with black color. The marker should be buried in 50cm depth; 30cm should be above the ground. The interval of marker should be 100-300m as per site actual situation.

2.4.5 OFC CABLE WORK

OPTICAL FIBER SPECIFICATION

All fiber optic cores shall be standards compliant ensuring splice compatibility with standards compliant fiber core of the same type from manufacturers. Layer of 5mm thickness Aramid Yarn, shall be provided to cover the complete cable. All Optic Fiber Cables shall meet IEC 60793 and ITU-T G652-D standards.

PARAMETER	REQUIREMENT
Number of fiber	24
Attenuation coefficient at 1310 nm	≤ 0.4 dB/km
Attenuation coefficient at 1550 nm	≤ 0.3 dB/km
Optical discontinuities at 1310 and1550 nm	< 0.1 dB
Chromatic dispersion between 1285and 1330 nm	≤3.5 ps/nm·km
Chromatic dispersion at 1550	≤ 18 ps/nm· km
Cable cutoff wavelength	≤1260 nm

2.4.6 Duct cable

The cables must be circular in cross section and free from pinholes, joints, repairs and other defects. Materials used in the construction of the cable shall not affect the physical or optical properties of the fibers and shall be compatible with each other.

Each fiber core must be distinguishable from other fiber cores by means of color coding ink visible throughout the design life of the cable (as Defined by TIA-598D). When the OFC enter into control station room, the cable will be protected by corrugated G.I pipe.

COLOR CODING OF FIBERS

Fiber Color	Fiber 1	Fiber 2	Fiber 3	Fiber 4	Fiber 5	Fiber 6	Fiber 7	Fiber 8
	Blue	Orange	Green	Brown	Grey	White	Red	Black
	Fiber 9	Fiber10	Fiber11	Fiber12				
	Yellow	Violet	Pink	Aqua				
Tube Color	Tube 1	Tube 2	Tube 3	Tube 4	Tube 5	Tube 6	Tube 7	Tube 8
	Blue	Orange	Green	Brown	Grey	White	Red	Black
	Tube 9	Tube10	Tube11	Tube12				
	Yellow	Violet	Pink	Aqua				

CHARACTERISTICS OF OFC

Characteristics	24 Fiber
Number of Tubes	04
Number of Fiber per Tube	06
Final Cable Dia., mm	12.0 ±5%
Jelly Filled	Yes
Tensile Strength, Newton	3500
Cable Weight, Kg (Approx.) /Km	100
Tube material	PBT
Filler material	Medium density polyethylene
Moisture barrier	Both side polyester coated water swell able tape
CSM type	Fiber Reinforced Plastic
Strength member	CSM
Aramid Yarn	5mm thickness
Outer sheathing material	High Density Polyethylene
Sheath thickness	2-mm +/- 10% average, min. at any point +/- 20%

OFC CABLE LAYING

Any OFC joint shall be housed inside the Man/hand hole.

The pulling of the cable shall be hand assisted at each Hand hole. The cable shall not be crushed or forced around a sharp corner. Sufficient slack shall be left at each end of the cable to allow proper cable termination. In the joint hand hole, 10M slack should be looped on each side. In normal hand hole where no joint, 2M slack should be kept in each hand hole.

All spare ducts shall be installed with a pulling rope when installed. A replacement rope shall be installed whenever a new cable is installed to the duct.

OFC CABLE JOINTING

Check the line sequence of optical fiber, according with A end to joint B end type to do junction.

The junction environment must be clean, the junction part and tool, material also must be clean, to ensure the junction quality and sealing performance of sleeve.

In optical preparing, strictly prohibit using blade to wipe off coat or use fire to make end section. Professional peel tools and un-cut tools should be provided.
For jelly filled type optical cable, it should use special cleanser to wipe off stuff, strictly prohibit using petrol to clean it.

It should accord with installation technique of junction sleeve to denude cable jacket, and not damage other parts of cable.

OFC CABLE TERMINATION IN CABINET

At the end node, the cable need terminate in the cabinet as per the installation manual. The cable should be fixed in the entry. If the cabinet supports un-cut method, the un-cut tubes/fibers should be properly looped.

OFC TAGGING

Every cable shall be individually labeled in every chamber by the Cable Contractor in accordance with the administration scheme identifying origin, destination and unique cable reference.

The cable shall be tagged at each handhole and chamber. The label should be made by white steel material. Its size is not less than10mm*80mm*2mm. And the label text format is "XX- Cable ID SR.NO. /fiber cores" (XX = Project name) should be printed with black ink. The label should have two small holes on both end and will be tied on the cable with cable tie. Each cable's start and end point with ID and cable type will be provided in SLD.

Below is an example format of tagging:

○ **XX-OFC-001 / 24F** ○

ODF FIBER TERMINATION

The cable should be terminated on 24 Port ODF with coupler pigtail and patch cord as per design.

OFC CABLE TESTING

After OFC cable laid and terminated, OTDR testing and OLTS testing should be performed for all the terminated fiber cores. The test should be performed at 1310nm&1150nm in bi-direction. The test result should be recorded in a test report form.

AS-BUILT SITE VISIT

After completion of each section, after installation completion either by trench or trenchless, the Contractor should prepare a site visit with employer in order to check the excavated area status before commencing the following section and each visit should be accompanied by its report. If the work is composed in sections, the permit of following section shall be given by employer after previous section site visit report acceptance. The site visit by the Contractor shall consist with conformance to the engineering plans, codes, guidelines, and general accuracy. It should be made at the completion of each section including the last section of installation works.

The routine on-site inspection/test checklist shall be compiled as support documents for this As-Built site visit. The site visit of the constructed areas shall focus on the following:

- Restoration has been accomplished.
- Permanent markers have been installed immediately beside the cables.
- Road bores, if used, are properly completed and will not collapse a portion of the road.
- Debris and trash have been removed from the site.
- Other instructions specific to the installation have been completed to the drawing's specifications and to the related institutions requirements.

As-Built site visit report shall be countersigned after the As-Built site visit for each section.

In case of unsuccessful installation works, all non-accomplished tasks indicated by site visit team must be handled. It is the responsibility of the Contractor to immediately respond to non-accomplished items and complete those items. In case of noncompliance with these guidelines, the employer may issue an enforcement notice to remedy the failure within a specific period of time.

2.5 CATEGORY 6 CABLES

Cat 6 cables must:

- Be provided by the connecting hardware manufacturer.
- Be 100 ohms 4-pair, Category 6 CM for horizontal and CMR rated for vertical backbone. Cable tested to 250 MHz and exceeds TIA/EIA 568-B Category 6, ISO/IEC 11801 Cable.
- Attenuation and Cross-talk at 100 MHz must be 19.8 dB maximum and 44.3db minimum respectively. Average results not required.
- Attenuation and Cross-talk at 100 MHz must be 32.8 dB maximum and 38.3db minimum respectively. Average results not required.
- Availability of a central cross filler made of PE for improved pair to pair noise isolation.
- Be appropriate for the environment in which it is installed.
- Meet the following mechanical specifications.

    - No. of pairs 4
    - Conductor 23AWG solid copper.
    - Insulation Thickness 0.22mm
    - External sheath Flame Retardant PVC
    - Sheath Color Different for voice and data cables.
    - Sheathed Cable diameter 6.0mm
    - Operational Temperature range -20°C to 60°C
    - Characteristic Impedance 100ohms + 5 ohms
    - Minimum Phase velocity of Propagation 69%
    - Max. Conductor DC Resistance 20oC 73.2 ohms/km
    - Delay Skew < 45 nanoseconds

2.6 HDPE PIPE

- Duct Size: 40mm
- Outer diameter: 40mm + (0.4mm)
- Wall Thickness: 3.5mm (± 0.2mm)
- Standard Lengths of Coils: 125M/250M/1000 M
- The HDPE pipe should be red color
- The HDPE pipe should be printed with text "XX-OFC" and manufacturer name at 1m interval. And the pipe length count number should be printed on the pipe with 1m interval.
- All installed ducts shall be smooth.
- The raw material shall be original.

3.0 DOCUMENTATION/SHOP DRAWINGS

3.1 ENGINEERING DESIGN DOCUMENTATION

Bidder will produce drawings of complete system to be submitted to Engineers for approval, indicating upon each the following;

a) Overall dimensional drawing of system cabinet, console and its accessories.
b) Block diagram of system offered with a brief write-up on operation including hookup arrangement with existing system.
c) Data sheets.
d) Bill of Materials.
e) Typical general arrangement drawings of all system equipment
f) Schematic diagram of each type of station.
g) Mounting details.
h) Cable connection diagram for various type of stations, clearly indicating cable size, number of pairs/cores etc.
i) Total power consumption details.
j) Heat load details of panel equipment's.
k) Technical leaflets on each piece of equipment.

The Systems Design Manual shall contain all relevant information pertaining to the design and operation of the delivered equipment.

a) This is intended to provide Owner with an understanding of the operational and design parameters of the equipment and to resolve System operational problems.
b) This documentation shall typically include the following items, presented in a Systems Design Manual:
c) Equipment design calculations and selection basis.
d) Equipment construction and assembly drawings.
e) Parts list and drawings with manufacturer's identification codes.
f) Systems connection diagrams.
g) Accessories list and drawings with manufacturer's identification codes.
h) Test certificates
i) Compliance certificates
j) Quality Control Plan

k) Hazard & Safety Plan
l) Test procedures
m) Recommended and mandatory spare parts List
n) Tools and tackle & consumable list
o) Operation and maintenance manuals
p) Final version of all drawings and documents furnished with the Bid.
q) Shop Drawings
r) Construction Drawings
s) As-Built Drawings

3.2 APPROVAL OF DRAWINGS AND DATA

The Contractor shall submit detailed drawings of all Extra Low Voltage (ELV) system including Single Line Diagram, Wiring Diagrams, Construction Drawings, Shop Drawings and As-Built Drawings for the Engineer's review and approval.

The manufacturing of equipment shall be started only after the above mentioned drawings and data are approved.

The time required for review and approval shall be considered included in the total time of completion of job.

Three sets of drawings including data of each equipment shall be furnished by the Contractor for the Engineer's approval before commencement of fabrication and manufacturing. The drawings to be supplied by the Contractor shall be as follows:

- Construction Drawings
- Shop Drawings
- As-Built Drawings

3.3 CONSTRUCTION DRAWINGS

The Contractor shall submit the following detailed Construction drawings which include:

A. Construction details of equipment
B. Dimensional plans, elevations and front view.
C. Internal devices/components detail.
D. Incoming and outgoing cable termination positions
E. Detailed Electrical Drawings:

3.4 SHOP DRAWINGS

The Contractor shall submit Shop Drawings which includes the locations, routing, spacing, installation and heights of the equipment etc. which are given on the tender drawings. These drawings depict only the position of various equipment and outlets. All the detailed planning for electrical and communication systems including cable tray/conduit routes etc. shall be carried out well in advance of the actual execution of work, by the Contractor to the satisfaction of the Engineer. For this purpose, the Contractor shall prepare shop drawings and obtain prior approval of the Engineer.

Three prints of each shop drawings shall be submitted for obtaining approval. No piece of work shall be allowed to be executed at site without the availability of these approved shop drawings. These shop drawings shall clearly depict the load balancing chart of each distribution board. Time required for the preparation and approval of shop drawings shall be considered to have been included in the total time allowed for the completion of the work.

The Contractor shall submit three copies of detailed shop drawings, technical data and schedules for review and approval of the Engineer at least sixty (60) working days prior to execution of work and obtain approval. In general, these detailed engineering shop drawings shall include, but not be limited to the following:

- Shop Drawing Layout Plans
- Server Room Layout Drawing with Equipment Layout
- Detail Calculations for each system
- Shop Drawing Riser / Line / Schematic Diagrams
- General Wiring and Cabling Routing Layout Diagrams
- Conduit and Cable Schedule
- Equipment Layout Drawings
- Combined Services Layout Diagrams (Coordinated with other services)
- Tagging schedules
- Foundation and Trench Arrangement Drawings
- Plans, Elevations and Sections
- Technical submittals of Equipment along with sample
- Testing and commissioning time table
- Testing and commissioning protocols
- Dimensional plans, elevations and front view.
- Internal *devices/components detail.*
- Incoming and outgoing cable termination position
- Detailed Electrical Drawings showing

    a. Single-Line diagram
    b. Detailed wiring diagram
    c. All interconnections
    d. Other electrical devices including, instruments and their wiring diagram

These above systems shall be complete in all respect as described in these specifications, drawings and BOQ.

The purpose of having drawings and other data checked and approved by the Engineer is to assist the Contractor in interpreting the technical specifications so as to eliminate mistakes in the equipment (type or design) or material actually installed for the work.

The formal approval given to the Contractor is to be considered as in conformance and in no manner shall be construed so as to relieve the Contractor from any liability or responsibility for proper design, fabrication or compliance with the Contract Documents.

The Engineer will review all drawings, manufacturer's catalogues, design calculations, and make changes as required, in order to assist in the overall job coordination and to ensure conformance to the technical specifications.

Engineer's approval must be obtained before equipment is purchased. The Engineer's approval will be general and shall in no way relieve the Contractor of this responsibility for any work required under the Contract.

One copy of each drawing and descriptive data will be returned to the Contractor generally marked.

- "APPROVED"
- "APPROVED EXCEPT AS NOTED"
- "REVISE AND RESUBMIT"

Each drawing/document, which is noted "REVISE AND RESUBMIT" shall be re-submitted after making corrections to the Engineer for further review/comments. The Contractor shall submit four (4) copies of each revised issue thereof.

Minor corrections/modifications will be necessary in the drawings/documents marked "APPROVED EXCEPT AS NOTED". The Contractor shall incorporate the changes marked but does not necessarily resubmit the drawings/documents for further approval.

The Contractor shall allow 15 days (from date of receipt by Engineer to date of dispatch from Engineer's Office) for Engineer's review of each set of drawings in his consideration of schedule of work and in the time allowed for completion of the Contract.

The Contractor shall be responsible for any discrepancies, errors or omissions in any drawings or other particulars supplied by him whether such drawings or particulars have been reviewed by the Engineer or not.

The symbols used for the simplified representation of communication equipment in drawings must conform to DIN or IEC standards. Three copies of the standards will be provided to the Engineer for his reference and record.

3.5 AS-BUILT DRAWINGS

The Contractor shall submit As-Built Drawings. Clearly annotated "As-Built" drawings and diagrams shall be maintained up to date on site on completion of the Job. One reproducible and three prints of each drawing shall be submitted to the Engineer along with a recommended maintenance schedule chart and manuals/operating instructions for equipment supplied. The Contractor shall also provide complete detailed identifications of all Extra Low Voltage (ELV) system.

The Contractor shall provide four copies of final As-Built Drawings and Warranty Certificates of each equipment to Engineer / Employer. As-built drawings shall consist of minimum following:

- Communication networks layouts showing sized, tiers and number of ducts and handholes, cable routing, positioning of each equipment of each system
- Schematic diagrams for proposed fiber optic networks showing connectivity of all cables.
- Server and communication room / closet layout plans showing all systems
- Layout drawings showing exact location of each device and route of cable.

3.6 CONTRACTOR'S RESPONSIBILITY

All relevant designs and drawings shall be approved by the Engineer prior to commencement of manufacture or construction on site. Approval by the Engineer of any design or drawing shall not relieve the Contractor of responsibility for the correctness of designs and drawings or for the safety, adequacy and suitability of any part of the equipment manufactured or constructed in accordance with that design or drawing.

3.7 DESIGN SUBMISSIONS

The Contractor shall submit Design Submissions/drawings on ISO A4, A3, A2 or A0 size sheets but A0 size drawings shall be reduced to A2 size for submission. Drawings shall also be provided in AutoCAD format. Draughtsman ship shall be to the highest current standards and shall be such as will enable clear microfilm copies to be taken and A2 size reductions of A0 size originals to be read without magnifying aids.

Drawings shall be complete in all respects, accurate numerically and geometrically correct and shall be sufficiently detailed to enable system and equipment erection to proceed without the need for further supporting drawings, details or interpretation. Drawings and calculation sheets which are not easily legible or present difficulty in interpretation will be returned by the Engineer to the Contractor for resubmission. All drawings and calculation sheets shall have title blocks, which shall be correlated one with the other. They shall be numbered in a logical sequence. The first edition submitted for approval shall be Revision 0 (zero) and subsequent revisions shall be referred to a Revision 1, Revision 2, etc. Alternative systems shall be subject to the Engineer's approval. Each revision shall be recorded in a revision block on the drawing and the subject matter of the revision shall be indicated. The revised portions of the drawings and design sheets shall be highlighted.

The Contractor shall maintain drawing reproduction facilities, to the approval of the Engineer in his office for the duration of the Contract.

3.8 DEVIATIONS

Where the Contractor proposes a deviation from the detailed requirements of the Specification he shall make a written application for approval of such deviation to the Engineer and he shall highlight the proposed deviation on the relevant drawings and design sheets of the submission. Except in the case of a deviation specifically approved by the Engineer the Contractor shall be responsible for ensuring the

conformity of the Works with the Specification, notwithstanding any general approval or lack of approval of design submissions by the Engineer.

4.0 WARRANTY

4.1 WARRANTY, TOLERANCES AND REJECTION

The Contractor shall provide warranty for all CCTV equipment through authorized local distributor for a period of three (03) years and at least 25 years Systems Warranty for Fiber Optic cable commencing the hand-over and acceptance date to the Employer. No equipment shall be accepted without warranty certificate from the manufacturer. It shall cover all costs for WARRANTY SERVICE, including parts replacement, labor, prompt field service, pick-up, transportation, and delivery. No extra cost shall be admissible for Warranty services.

The Contractor shall furnish a Certificate of Compliance for each major equipment jointly signed by the Contractor and the manufacturer of the equipment that the equipment conforms to the standards and all other requirements laid down in Contract Specifications and that both the Contractor and the manufacturer assume joint responsibility in respect of performance of the equipment.

During and/or after the installation of equipment, manufacturer's representative for each equipment shall visit the site and shall verify that the equipment has been installed as per manufacturer's instructions and the Certificate of Compliance, jointly signed by the Contractor and the manufacturer shall also cover any amendments/modifications made in the installation by the Contractor with due approval of the manufacturer. All costs in this connection shall be borne by the Contractor.

All equipment and material shall be so designed that the tolerances according to the relevant IEC and other applicable standards and regulations as well as the special requirements for the overall equipment are adhered to, and must demonstrate compliance both at the manufacturer's works and at site. Should the equipment/material fail to meet the warranties after due account has been taken of the specified tolerances, the equipment/material will be made available to the Contractor so as to allow the Contractor to carry out rectification on the equipment/material by modifying or replacing defective or wrongly designed parts or equipment/material as a whole.

If the warranted values are not achieved even after remedial work has been carried out, the Employer may reject the equipment(s) as a whole or that part of the system which is causing the non-fulfillment of the warranty or the completion of system.

If an item of equipment/material has to be rejected because of major deficiencies which are not remediable, then such plant or item shall remain available to the Employer free of charge until such time as a replacement is ready for installation. All costs for such rectification shall be the responsibility of Contractor. Any work which does not impair serviceability and integrity of

equipment/material as a whole shall not be deemed as violating the warranty obligation of Contractor, provided that the Contractor remedies that within 4 weeks. The Contractor shall warranty to complete all work called for, so that equipment and material supplied by him are ready for connection and operation within the given period.

The decision regarding the acceptability or otherwise of the equipment and material offered shall be made by the Employer / Engineer whose decision shall be final.

4.2 DEFECTS LIABILITY PERIOD

The Defects Liability Period is one year (365 days) after the date of taking over of the EPC Works as certified in Taking-Over Certificate but subject to extension.

4.3 USE OF PROVEN TECHNOLOGY

For all Original Equipment Manufacturer (OEM) equipment, the Contractor shall clearly identify the brand of the equipment, the country where the equipment has been manufactured, as well as the local agent in Pakistan who is able to provide local maintenance assistance.

Local agent's reference shall include at least (but not limited to)

- Company name,
- Address in Pakistan,
- Contact persons,
- Phone numbers,
- Valid Email,
- Reference of the company in similar fields.
- Authorized distribution certificate from OEM.

Equipment manufactured in Israel and India is not acceptable. The Contractor shall clearly mention in his bid the origin of the equipment that he is proposing.

The manufacturer shall have a minimum of 5 year's experience in the design and installation of similar types of systems.

4.4 EQUIPMENT LIST

The Contractor shall submit to the Engineer for approval a complete list of materials and equipment to be incorporated in the work. This list shall include at least the manufacturers name, catalogue numbers, dimensions, and other descriptive data as may be required. No consideration will be given to partial lists submitted from time to time.

Approval of material will be based on manufacturer's published data submitted. The approval of the materials and equipment will be tentative subject to submission of complete schematic diagram and shop drawing layouts indicating compliance with the Contract Documents.

4.5 AFTER – SALE SERVICE

After the expiry of the warranty period, the Contractor shall be able to provide maintenance support and any spare part at least during the 10 years following the substantial acceptance of the related equipment/system.

4.6 PAYMENT

Unless specifically stated otherwise, the cost of all design, material, equipment, labour, services, etc. required in accordance with the Contract, which is acceptably designed, supplied, installed, configured, programmed, tested and commissioned as specified and accepted by the Employer, shall be considered to be included in the amounts stated against each item of the BOQ.

For items with specified quantities as given in the BOQ, adjustment shall be made in the amount payable to the Contractor in accordance with the actual quantity of work acceptably completed by the Contractor. The payment shall be made at the unit rates stated in the Schedule of Prices.

No such adjustments shall be made for items specified in 'Lot' and 'Job' units. No separate payment shall be made for the works stated in this section. Their cost deemed to have been included in the BOQ rates of the respective equipment. The rates quoted shall be inclusive of all material, works and services required for completion of each item of work including surveys, investigations, co-ordinations, integration, manufacturer's recommended items and associated civil works etc.

The measurement and payment of items under Schedule of Prices shall be made as under:

ITEMS WITH UNIT OF MEASUREMENT AS NUMBER (NO.)

a) Measurement: Measurement of acceptably completed works of these items will be made on the basis of actual number provided, installed in position, tested, commissioned and trained.

b) Payment: Payment will be made for acceptable measured quantity of respective items on the basis of unit rate per number quoted in the Schedule of Prices. The unit rate shall include all cost of providing and installing associated accessories, installation materials, etc. and shall constitute full compensation for all the works related to these items.

ITEMS WITH UNIT OF MEASUREMENT AS LOT / JOB

a) Measurement: Measurement of acceptably completed works of items stated in the unit of Lot / Job, provided and wherever required installed in position, tested and commissioned.

b) Payment: Payment will be made for acceptable measured quantity of respective items on the basis of lump-sum price per Lot / Job quoted in the

Schedule of Prices and shall constitute full compensation for all the works related to these items.

ITEMS WITH UNIT OF MEASUREMENT AS "RUNNING METER" (RM.)

a) Measurement: Measurement of acceptably complete works of this item will be made on the basis of actual length in meters as measured along the centre line of respective work acceptably provided, installed in position, tested and commissioned. No measurement shall be made of sag in overhead conductors and slack in underground cables.

b) Payment: Payment will be made for acceptable measured quantity of overhead conductor/cable on the basis of unit rate per meter length quoted in the Schedule of Prices. The unit rate shall include all cost of equipment, material and accessories and shall constitute full compensation for all the works related to the above items. No payment shall be made for sag in overhead conductors and slack in underground cables.

ITEM OF EXCAVATION WITH UNIT OF MEASUREMENT AS CUBIC METER (CM)

a) Measurement:Measurement of acceptably complete works of trench excavation will be made on the basis of actual volume in cubic meter of earth material excavated to the line, level & grade as shown on the drawings.

The quantities of excavation shall be measured /calculated on the basis of vertical excavation required for the nominal trench dimensions as shown on the drawings.

b) Payment: Payment will be made for acceptable measured quantity of excavation for service line trenches on the basis of unit rate per cubic meter quoted in the Bills of Quantities & shall/constitute full compensation for all the works related to the item.

ITEM OF BACKFILLING WITH UNIT OF MEASUREMENT AS CUBIC METER (CM)

a) Measurement: Measurement of acceptably completed works of backfill/fills for trenches will be made on the basis of actual volume in cubic meter including the volume of sand bedding, protective tile cover, warning tape and above ground cable markers of compacted backfill/fill provided and placed in position in accordance with the lines, levels and grade of the existing ground level.

b) Payment: Payment will be made for acceptable measured quantities of backfill/fills for trenches on the basis of unit rate per cubic meter quoted in the bills of Quantities including the cost of sand bedding, protective tile cover and warning tape and above ground cable markers.

5.0 SAMPLES

On the request by the Engineer, the Contractor shall supply a short (five meter) sample of any or all of the CCTV equipment and cables proposed, and samples of terminals, glands, clamps, etc.

5.1 DAMAGE DURING INSTALLATION

Any damage to cables or accessories during installation shall be made good by the Contractor at his expense and to the satisfaction of the Engineer.

5.2 COUNTRY OF ORIGIN AND STANDARDS

The country of origin/manufacturing and assembling of all systems equipment shall be only from following:

- USA
- Europe
- Japan

Equipment manufactured in Israel and India shall not be acceptable. The Bidder shall clearly mention in his bid the origin of the equipment that he is offering. In case any minor subassembly or part assembly is from any country other than that mentioned above, the bidder shall disclose this information with his bid. In case the equipment offered by the Bidder is found unacceptable by the Employer, the Bidder shall substitute the equipment found unacceptable by equipment from other acceptable leading manufacturer at no additional cost to the Employer. No major electronic component of hardware shall be locally built or customized.

Equipment design and manufacturing shall be only from Europe, USA and/or from the list of mentioned brands at the end of these specifications. Materials/Equipment shall be designed, manufactured, tested and installed according to the BS/IEC/ISO/ITU/EN/CE Recommendations. The latest edition and amendments shall apply in all cases.

5.3 DEGREE OF PROTECTION PROVIDED BY ENCLOSURE FOR EQUIPMENT

All probes, terminal boxes, kiosks, cabinets and equipment enclosures shall have degrees of protection provided by enclosure according to IEC 529 as follows:

- Outdoor IP 66 (minimum). For sensitive IP 68 shall be provided.
- Indoor IP 51 (minimum).
- Condensation.

Any equipment enclosure such as cabinets, kiosks, mechanism boxes, etc. within which condensation could occur and affect the performance of equipment shall be provided with an anti-condensation space heater. They shall be automatically controlled by a humidistat, the operating range of which shall be adjustable. It shall

be possible to switch the heater on and off manually. A space heater test circuit shall be installed in each enclosure with a test push button and associated lamp. A switch for the purpose of isolating the power supply to the heater circuit shall be provided at each enclosure. These circuits shall operate at 230 V AC.

All enclosures shall be designed to minimize condensation, with provision for ventilation and drainage as appropriate.

5.4 SUPPORT STRUCTURES FOR EQUIPMENT

All support structures for equipment shall be designed to suit the service conditions specified, the loads imposed on them, and any appropriate electrical clearance requirements.

All outdoor structures shall be hot-dip galvanized. Steel structures for indoor use shall be hot-dip galvanized if specified in the technical sections of the Specification.

5.5 LIST OF MANUFACTURERS/SUPPLIERS

While procuring material related with any engineering discipline, the responsibility shall be upon the Contractor for establishing the genuineness of any material/product/item for its make and origin as specified below. The supplier of the items must have authorization certificate from principal/manufacturer for the sale of equipment in Pakistan with installation, testing, commissioning & O&M facilities as required. The equipment /items shall be from following recommended brands or equivalent in conformance to the specified requirement.

In case of non-availability of specified brands mentioned in the technical specifications, the Contractor shall provide certificates from the Authorized Local Distributor in Pakistan confirming that the mentioned brand is not available in Pakistan.

In case if the offered equipment is not available, then the detailed type tests shall be carried out by the Contractor in International Independent test laboratory in the presence of Client and Consultant representatives to establish conformance to specified international codes and standards without extra payment.

S. No.		**Distributor/Suppliers**
IP Based Video Surveillance System		
1	Bosch Germany	Main Office
2	Axis Sweden	Main Office
3	Avigilon Motorolla Canada	Main Office
4	NOVUS Europe Poland	IT Bridge Lahore E-mail : info@itbridge.com.pk 042- 35443273 / 0321-4631931

Network Switches		
1	Cisco	Main office
2	Juniper USA	Main Office
3	Rucks USA	Main Office
HDPE Pipe Conduit & Accessories		
	Beta	Main Office
	Popular	Main Office
	Dadex	Main Office
Steel Conduit & Accessories		
	Hilal Industries	Main Office
	IIL	Main Office
	Jamal	Main Office
	Pioneer	Main Office
STP Cables, Coaxial Cables, Fiber Optic Cable, Computer Networking Cabling, Racks & Accessories.		
	Schneider Electric USA	Main Office
	Panduit USA	Main Office
	i-Connect UK	Netcom Solution (Pvt.) Ltd. 0302-8549090 zia@netcompk.com
Workstation		
	Dell	Main Office
	HP	Main Office
Printer		
	HP	Main Office
	Cannon	Main Office
LED Display Unit		
	Daktronics USA	Quadra Technology Lahore
	Barco USA	Main Office
	Mitsubishi Japan	Main Office

SECTION-18: PLUMBING WORKS

GENERAL

This section involves Specifications of materials, supply, delivery on site, installation, testing and commissioning of the hot and cold water for plumbing and sanitary drainage piping services proposed for the project.

OBJECTIVES

The specifications have been prepared for guidance of the contractor. The contractor shall guarantee the capacity and performance of the equipment will be as specified and the quality of the installation and workmanship will be in accordance with the specifications. The contractor shall be solely responsible for the supply and installation of a complete system and shall guarantee the performance to meet the design intent.

I. PLUMBING WORKS FOR WATER SUPPLY SYSTEM SHALL INCLUDE BUT NOT LIMITED TO THE FOLLOWING:

i) Hot and Cold water system
ii) Water Storage tanks, pipe work, fittings and accessories
iii) All external services of water supply system
iv) Installation of all fittings and fixtures i-e water closets, showers, wash basins and sinks
v) Acoustic treatment and vibration control
vi) Painting and labeling of pipe work and equipment
vii) Provision of all hold down bolts, spigots and struts required to be built in during construction
viii) Testing and commissioning

2) PLUMBING WORKS FOR SEWERAGE AND STORM WATER DRAINAGE SYSTEMS SHALL INCLUDE THE FOLLOWING:

a) Internal and underground sanitary drainage system
b) All external services such as

- Sewerage network

c) Installation of all sanitary wares and fittings including flush tanks, water closets, urinal and bath tubs
d) Acoustic treatment and vibration control
e) Painting and labeling of pipe work and equipment
f) Provision of all hold down bolts, spigots and struts required to be built in during construction
g) Testing and commissioning

1.0 PLUMBING WORKS FOR WATER SUPPLY SYSTEM

1.1. SYSTEM DESCRIPTION

A fully functional system including external loop for building connections, overhead water tanks piping, fittings, valves and other accessories shall be provided.

System shall be provided for the whole block, complete with pumps, tanks, pipe works, controls, conduits, wiring etc. in full compliance with all relevant specifications and requirements.

This shall consist of but not limited to the following:

(a) Cold water supply system

i. Connection from water main loop running near the building, this shall deem to include all necessary valves and fittings. The water tanks shall be complete with the following items;

- High and low level alarms
- Water level indicator
- Vent pipe, overflow, drain off, access manhole, all required valve, etc.

ii. Complete hot and cold water pipe work with taps and relevant sanitary fixtures and fittings at toilets/ kitchens etc. as indicated in the drawings.

iii. Water supply piping from overhead tank to all floors including all accessories as a part of gravity feed system.

1.2. COLD AND HOT WATER PIPES & FITTINGS

- Polyethylene pipes for supply to underground and overhead tanks complying ISO 4427:1996 & DIN 8074, 8075.
- Providing, fixing, jointing and testing Polypropylene Random (PPR) pipes of approved make pressure pipe for cold and hot water as per DIN 8077-8078,PN-20 for pipes and DIN 16962,PN-25 for fittings (polyfusion welded joints) inside building including fittings and specials (sockets, tees, elbows, bends, crosses, reducers, adaptor, plugs and union etc.) supported on walls or suspended from roof slab or run in chases including pipe hangers, supports, cutting and making good the chases and holes, complete in all respects.

1.3. INSTALLATION OF SANITARY APPLIANCES

1.3.1 Bath Tub

The bath tub shall be bound to the earthen system of the building. A separate floor waste shall be installed below the bath tub. Access opening shall be provided to reach the underside of bath for maintenance.

1.3.2 Shower Mixer

Where shower mixer is of concealed type, pipe union shall be provided to allow for connection to shower hose.

1.3.3 Plumbing Fittings and Accessories

The contractor shall supply and fix all plumbing fittings such as water faucets, shower fittings, mixing valves, etc, in accordance with manufacturer's instructions and connect to piping system. The contractor shall supply all fixing materials such as screws, rawal plugs, union, collars, compression fittings, etc. as required.

1.3.4 Water Service Connection

The Licensed Plumber shall apply and make all necessary arrangements/inspections with the Local Authorities for the water connection.

1.3.5 Piping Materials

All piping materials shall be of type/brands stated in the list of approved fittings and pipes for water service installation.

1.3.6 Piping Joints

Pipe joints for the various pipes shall be as follows.

PPR-C Piping	Heat Fusion Welding as per manufacturer's recommendations.

1.3.7 Testing of Mains

All cold and hot water supply pipe work shall be subjected to a hydrostatic pressure test of 12 bar or 1-1/2 items the maximum working pressure, whichever is higher. The test period shall be two (2) hours during which no leakage is allowed.

1.3.8 Sterilization of Main

After the pipe work has been tested and approved, it shall be sterilized with a solution of chloride of lime before it is coupled.

1.3.9 Valves

All valves shall be suitable for the working pressure involved but not less than one (1) MPa.

i. Isolation Valves (Gate Valve)

Up to 50mm: Bronze gate conforming to BS 5154 series 'B', non-rising stem, solid wedge disc, inside screw, union bonnet; female threaded (BS 21) connection; fitted with enameled metal and hand wheel valves for working pressure above 16 bars shall be conforming to BS 5154 PN 32 series B.

65mm and above : Cast iron body conforming to BS 5150, bolted bonnet; solid wedge disc and bronze trim; inside screw, non-rising stem, flange connection (PN 16), fitted with cast iron and hand wheel valves for working pressure above 16 bars to PN 25 shall be of Class 300 cast steel wedge gate valve with flanges.

ii. Check Valve

Check valve shall comply with the requirements of BSS 5153: 1974 or equivalent. The valve shall be of swing type and shall be of quick acting single door type.

(Swing check valve conforming to BS 5154 series 'B' bronze with removable hinge pin and screwed cap, suitable for operation in either horizontal or vertical position. Threaded (BS-21) connection for 50mm and smaller. Flanged (PN 16) connection for valves above 50mm. for valves above 16 bar working pressure. It shall be of class 300 cast carbon steel swing check valve with PN 25 flanges)

iii. Ball (Float) Valves

Equilibrium type conforming to BS 1212:Part 1. foam plastic ball float with stainless steel rod and double lock nuts or copper ball float complete with brass rod. The valve shall be made of cast iron or bronze body and suitable for minimum working pressure of PN 16. Screwed joints shall be provided for up to 65mm diameter and flanged joints for 80mm diameter and above. Locking device to be provided, so that the valve can only be opened when the water level drop to a pre-determined level.

iv. Pressure Relief Valves

Each pressure relief valve shall be of the fully enclosed type and fitted with hand easing gear.

Each pressure relief valve in a pressure reducing station shall give a flow capacity equal to that of the pressure reducing valve.

Pressure relief valves in locations other than reducing station shall have a flow capacity equal to that of the pressure reducing valve.

Pressure relief valves in locations other than reducing stations shall have flow capacities equal to that of the associated equipment.

v. Strainers

Strainers shall be installed on all system and equipment susceptible to damage from dirt, grit or foreign matter including, but not limited to pumps, control valves and where required.

Strainer shall be Y –pattern bucket type, not less than full line size. Unit shall be constructed of cast iron or copper alloy body with perforated stainless steel screen. The total perforation area shall not be less than twice the cross sectional area of the pump suction pipe. Strainer with working pressure above 16 bars shall be of cast steel type.

Size up to 50mm, screwed connection shall be used or flanged joints (PN 16) shall be used. For 65mm and above, flanged joints shall be used up to PN 25. For valves with working pressure above 16 bars, drain cocks shall be provided.

a) Size 15 – 50mm

Y –type strainers with screwed cover, 18/8 stainless steel screen, 26 swg with 0.8mm perforation. Ends screwed BS 21 taper thread.

Service Rating: $10^{o}C$ to $100^{o}C$
10.5 bar $186^{o}C$ at steam.

b) Size 65 – 150mm

Y –type single basket strainer. 20 mesh stainless steel screen, cover. Size 200mm and above

Bucker type strainers, 40 mesh stainless steel screen, bolted cover.

1.3.10 Schedule of Valves

The contractor shall supply and install all valves to all fixtures as specified below

a) WC Pan

25mm ball valve with suitable 25mm union piece for connection to flush valve or 12mm union piece for connection to cistern.

b) Basin/sink

Ball valve of size to suit distribution pipe for multi-basin arrangement and 12mm ball valve for single-basin arrangement.

c) Kitchen

Ball valve of size to suit each branch pipe.

1.3.11 Tap

a) All taps for the garden, plants and in each plant rooms shall be of the brass type.

b) Using otherwise mentioned all taps for sinks in kitchen, utilities rooms shall be of chrome plated type.

1.3.12 Pressure Gauges

The maximum scale value of the gauge shall be about 150% of the anticipated maximum operating pressure. It shall be graduated both in imperial units (psi) and metric units (Kpa).

Provisions shall be provided to enable each pressure gauge to be easily removed without interruption to the installation.

1.3.13 Connector (Pipe Line Vibration Eliminator)

Flexible connectors shall be provided to prevent vibration from all rotating equipment. Flexible connectors shall be located as close to the rotating equipment as practical.

1.3.14 Water Level Controllers

Water level controllers shall be provided and fitted in all water tanks for monitoring the water levels in the water tanks and give the appropriate control/warning signals for the system. Water level controllers shall be of the floatless type using water-proof sensing electrodes with controller containing the switching circuits and control relays, suitable for conductive liquids like water and dilute acidic fluid. It shall be used to automatically operate sequential

pump sets and give low and high level alarms. However, provisions shall also be provided for manual override to enable manual operation of pump sets.

Sensing electrodes and the controller shall be suitable for operation temperature of up to 55°C.

2.0 PIPE WORK AND FITTINGS

The word 'pipe work' or 'piping' shall mean all pipes, drains, tubes, pipe fittings, valves including hangers, brackets, anchors, expansion devices, sleeves, and all accessories connected thereto for the complete piping installation.

Pipelines accessories such as gauges, meters, control devices, etc, shall have the same working pressure rating as the associated pipe work.

All pipes and fittings supplied shall conform to relevant codes as specified in these specifications.

2.1 PIPE SUPPORTS

Pipe hangers shall be provided at the following maximum spacing and/or as per manufacture's recommendations.

Pipe Dia	**Hanger Rod Dia**	**PPR-C Max Spacing**	**uPVC Pipe (Type-B) Max Spacing**
mm	Mm	m	m
20	6	0.70	0.8
25	6	0.80	0.85
32	10	0.90	0.90
40	10	1.05	1.07
50	10	1.15	1.15
63	12	1.30	1.30

Horizontal pipe work shall be supported by adjustable flat iron of clevis type hangers hung by hot rolled steel rods of the following diameters and spacing, and as per recommendations of pipe manufactures.

NORMAL PIPE (mm)	**DISTANGE BETWEEN SUPPORTS** (m)	**DIAMETER OF ROD** (mm)
25	1.8	10
32	2.4	10
40	2.7	10
50	2.7	10
63	3.0	12
110	3.0	16
160	3.6	18

2.2 PIPE SLEEVES

Pipe sleeves shall be provided and installed by the Contractor for casting in where pipes penetrate the concrete structure.

The minimum clearance between the pipe and pipe sleeve shall not be less than 25mm.

Sleeves through fire rated partitions or walls or floors shall be of galvanized wrought iron pipe. The annular space of pipe sleeves shall be tightly packed with approved fire-rated material.

Where sleeves occur in finished spaces, solid close fitted chrome plated steel plates secured by screws shall be provided.

2.3 PIPE WORK INSTALLATION

All pipe work shall be installed to meet structural, architectural, and functional conditions and shall not interfere with the work of other trades.

All pipe work shall be installed and supported so that it is free from excessive stresses due to weight from its contents plus its own dead weight, dynamic forces due to liquid movement, and expansion and contraction due to change in temperature.

Pipe work connected to the pumps shall be separately supported so as not to impose any load on the pump casings.

3.0 SANITARY AND WASTE WATER DRAINAGE SYSTEMS

The sanitary and waste water drainage systems shall be as follows.

3.1 SOIL AND WASTE PIPES

- Unplasticised polyvinyl chloride (uPVC) pipes conforming to BS-4514/5255 (above ground) and BS-4660 (underground) (Soil, Waste, and vents).

  FITTINGS

  There are two types of fittings available as per ISO 3633:

  1. uPVC fittings with Solvent Cement (SC) socket joint conforming to ISO 3633:1991.

  2. uPVC fittings with rubber ring socket joint conforming to DIN 19560, which is compatible with ISO 3633/PS 3214.

- RCC pipes complying with ASTM Designation C-76-91 for "Wall B" as required and shown on the Drawings (Soil and waste)

3.2 RUBBER RINGS

The rubber rings may either be Synthetic or natural conforming to PS 1915:1987 & ISO 4633/1983 (E).UPVC pipes shall be used for domestic installation inside the buildings for soil and waste discharge, ventilation and drainage of rain water.

The material shall consist substantially of poly-vinyl chloride (PVC) to which may be added only those additives that are needed to facilitate the manufacture of pipes and fittings having good mechanical strength and opacity.

The pipes and fittings shall be tested mechanically and physically in accordance with the relevant Standards as and when directed by the Engineer, before and during installation.

3.3 SCHEDULE OF MATERIALS AND EQUIPMENT

The following schedule consists of the relevant materials and equipment necessary for the completion of all sanitary and plumbing works.

3.3.1 Soil and Waste Pipes

Unplasticised Polyvinyle Chloride (uPVC) pipe will be used for soil and waste pipes.

3.3.2 Storm Water Drainage Pipes

Unplasticised Polyvinyle Chloride (uPVC) pipe will be used for soil and waste pipes.

3.3.3 Floor Traps, Gully Traps, Concrete Sump, Inspection Chamber Covers & Electric Heaters

Every waste sanitary appliance shall be provided with a waste filling trap for connection to the waste pipe. The waste pipe shall connect to the floor trap above the water seal of the trap.

Where a group of 3 or more wash basins are connected in series, loop venting is required. However, the loop venting shall be terminated separately to the atmosphere. The minimum diameter of loop venting pipe shall be 25mm.

Criteria for Minimum Internal Diameter of Waste Pipe for each type of Sanitary Appliance

Type of Appliance	Minimum Internal Diameter of Waste Pipe
	mm
Wash Basin	32

Sink (Single or double bowl)	40
Laboratory sink	40
Long bath/Shower Tray	40
Foot Bath	40
Wash Tub	50
Wash Trough/Custom-Made Sink	50
Drinking Fountain	50

Minimum number of waste sanitary appliance allowed on each diameter of common waste pipe for waste sanitary appliances connected in series

Type of waste sanitary appliances connected in series	**Maximum number of waste sanitary appliances allowed on common waste pipes**
Wash basin	3
Sink (Single or double bowl)	2
Laboratory Sink	2
Drinking Fountain	12
Wash Trough/Custom-Made Sink	2
Wash Tub	2

i. Floor Traps

Floor trap shall be of uPVC or of other anti-corrosive material, compatible with the material of pipe. They shall have minimum water seal of 40 mm and shall be provided with removable metal strainers. The traps shall be of self-clearing type. The open area of the strainer shall be greater than the cross section area of the drain line to which it connects. Floor traps shall be well set in position so that there is no leakage at the joint between trap and the floor. Floor traps can also be made of Cast Iron body and frame.

ii. Cleanouts

Cleanout shall be of the same nominal size as that of the pipe on which it is installed. Cast Iron Cleanout shall consist of tapped heavy duty cast iron ferrule caulked into cast iron fitting and heavy duty brass tapered even plug. UPVC cleanout shall consist of either two 45° bends or one long radius bend both with an removable end cap and other necessary fittings/material for complete installation in floor Cleanouts shall be turned up through floors by long sweep fittings, wherever the space so permits. Top finish of cleanout shall be flush with the floor by means of finished metal plate secured in position and screwed firmly to the plug. Cleanout shall be so installed that there is a clearance of at least 300 mm for pipes less than 75 mm diameter and at least 457 mm for pipes of 75 mm and larger diameter, for the purpose of Roding.

iii. Roof Drains

Roof drains shall be of bitumen coated cast iron/ brass or uPVC or of other anti-corrosive material, compatible with the material of pipe. They shall have strainers extending at least 15 mm above the roof surface immediately adjacent to them, when installed on flat part. Bottom of strainer shall be flush with the roof surface, when installed on vertical part. Strainer shall have an available inlet area, above roof level, of not less than 1-1/2 times the area of the down-pipe to which the drain is connected.

The connection between roof and roof drain shall be made watertight by the use of proper flashing material.

Minimum size of the rain water pipe will be 3 inch for roof area upto 548 Sft. For larger roof area, number of roof drainage pipes and sizes may be more.

iv. Gully Trap

Gully trap shall be of castiron with specified size outlet. The inlet shall be provided with cast iron, medium duty grating. The open area of the grating shall be at least 1-1/2 times the area of the outlet. The trap shall be of P-Type with a minimum water seal of 50 mm.

v. Electric Water Heaters

Water heater shall be of automatic storage type eclectically operated, including all necessary fittings for complete installation & operation. The heater shall be of best quality, as approved by the Engineer.

The working and test pressure of the heater shall be 6 bar and 10 bar respectively and shall deliver water at 150 degree °F. Storage capacity of water heater shall be capable to meet the peak demand. Minimum heating capacity of the water heater shall be 12 liter/minute.

Heater shall be provided with following accessories.

- Thermostatic control
- Temperature & pressure relief valve High limit Control.

3.3.4 Pipe Joints

i. Jointing materials

For unplasticized PVC pipes, all joints shall be solvent weld/push fit joints made in accordance with manufacturer's recommendations and to the approval of the Engineer. Joints shall be made with proper pipe fittings and heating of pipes for jointing will not be permitted.

Joints between unplasticized PVC pipes and cast iron pipes shall be made with an approved jointing ring.

ii. Weld joints on upvc pipe works

Unplasticized PVC pipe work shall be solvent or push fit ring jointed as recommended by the manufacturers or as detailed elsewhere in this Specification.

Where solvent welding is used, particular attention must be paid to prepare an abrasive paper and spirit cleaner must be used. When applying solvent, heat shall be avoided in order to prevent the cement drying before the chemical bond between the two surfaces is completed. Mating surfaces shall be turned for even spread of the solvent. Excessive cement shall be wiped off quickly.

3.4 UNDERGROUND DRAINING SYSTEM

The work includes the design, supply and installation of the whole of the entire underground sanitary drainage system including inspection chamber, concrete sumps, gully traps, grease interceptors, drain lines, all frames and covers, excavation. Concreting, backfilling, reinstatement of existing ground surfaces, and connections to the last manhole including all internal components of inspection chambers and sumps.

3.5 INSTALLATION

3.5.1 Excavation

All excavation shall be carried out as necessary for the construction of the works. Excavation for pipe trenches shall not be less than 600mm wider than the diameter of the pipes and the ground near beds shall be carefully graded.

All excavation shall be kept free from water at all times by pumping or temporary drainage. In the event of the excavations being made deeper than required level, it shall be filled to the proper level with lean concrete.

3.5.2 Backfilling

All concrete shall be thoroughly set before refilling is commenced. In backfilling of the excavation, only selected hard dry material free from lumps exceeding 75mm in size and from stones shall be used in the initial refilling and shall be carefully placed next to the permanent work and well packed and well rammed in layers of 150mm. The remainder of the excavations shall be filled in with the excavated material, in layers of not more than 300mm deep. Each layer shall be thoroughly rammed

before the next layer is placed. Surplus soil shall be piled on top of the filling to the extent of possible subsidence. All refilled trenches shall be maintained to the satisfaction of the Engineer.

3.5.3 Pipeline Setting Out

Excavation for trenches shall be to straight lines and gradients required for the pipes and beds as specified. The trench bottom shall be of sufficient width to allow adequate working space for pipe laying and jointing but beyond these requirements, the width must be kept to a minimum.

3.5.4 Concreting Works

All Concreting works shall comply with specification of concrete given for Structural works.

All drain lines passing under buildings and driveways are to be surrounded with concrete which shall be carried up from the bed in a square section with a minimum of 150mm thickness over the barrel of the pipes. Traps and gullies shall be properly bedded on and shall be surrounded with concrete.

3.5.5 Installation of Sanitary Appliances

a) Water Closet

Joints between unplasticized PVC pipes and fixtures shall be made with approved rubber seal ring joints. The water closets shall be firmly bedded in cement mortar. Every pedestal water closet pan shall be secured to the floor using stainless steel or non-ferrous screws. The joining of the outlet of the water closet pan to the branch drain-line or discharge pipe shall be made by an approved type pan collar. The flushing cistern for European Water closet shall be coupled.

b) Flushing Cisterns

Flushing cisterns for Indian/Asian water closet shall be firmly fixed to the wall by means of either bolts and nuts or brackets. The flush pipe connecting a flushing cistern to a water closet shall be fixed as straight as possible and shall not be less than 32mm in diameter if the bottom of the cistern is fixed 1.5m or more above the top of the water closet. The flush pipe shall not be less than 38mm in diameter if the bottom of the cistern is fixed less than 1.5m above the top of the water closet. Flush pipes from the cistern to a squat pan shall be securely fixed to the wall. The Contractor shall apply a 12mm chromium plated stopcock for each flushing cistern.

c) Waste Sanitary Appliances

Every waste sanitary appliance which is suspended shall be fixed to the wall by means of brackets which are built or screwed into the wall. Every floor mounted waste sanitary appliance shall be provided with pedestal, foot and leg. Any sink and wash basin may be mounted on a cabinet or mounted on wall. All fixing screwed shall be corrosion resistant. All joints between any waste sanitary appliance and the abutting wall shall be water-tight.

d) Plumbing Fittings and Accessories

The contractor shall supply and fix all plumbing fittings such as water faucets, shower fittings, mixing valves, etc, in accordance with manufacturer's instructions and connect to piping system. The contractor shall supply all fixing materials such as screws, rawl plugs, union, collars, compression fittings, etc. as required.

3.6 MATERIALS AND MANUFACTURERS

3.6.1 WATER SUPPLY SYSTEM

i. COLD AND HOT WATER PIPES & FITTINGS

Material

- Polyethylene (P.E) pipes for supply to underground and overhead tanks.
- Polypropylene Random Copolymer (PPRC) for water supply to toilets/kitchens.

Manufacturers

- Dadex
- Tetra Plast
- Beta Pipes
- MAF Pipes

ii. VALVES

Valves up to 50mm diameter shall have bronze bodies and trim with screwed connections. Valves greater than 50mm diameter and above shall have cast iron or cast steel bodies, bronze trim with flanged connections.

Manufacturer:

- Kitz Valves
- SCON Valves

- Niko Valves
- KSB Pumps Company Limited

iii. PUMPS AND VALVES

- Bronze bodies and trim, screwed connection up to 50mm dia.
- Cast iron or cast steel bodies, bronze trim, flanged connections for greater than 50mm dia.
- Non-slam type check valves at discharge side of water supply pumps.
- Submersible centrifugal pump sets for water supply from underground to overhead tank.

iv. Manufacturer of Pumps:

- KSB Pumps Company Limited
- Grundfos (HMA) Pumps

3.6.2 SEWERAGE SYSTEM

i. SOIL AND WASTE PIPES & FITTINGS

Material

- UnplasticizedPolyvinyle chloride (uPVC) soil and waste pipes.

Manufacturers

- Dadex
- Tetra Plast
- Beta Pipes
- MAF Pipes

ii. FLOOR TRAPS, CLEANOUTS, ROOF DRAINS GULLY TRAPS AND ELECTRIC WATER HEATER/GEYSERS

a. Floor Traps

Material

Floor trap shall be of uPVC or of other anti-corrosive material, compatible with the material of pipe.

b. Cleanouts

Material

Cleanout shall be of the same nominal size as that of the pipe on which it is installed. uPVC cleanout shall consist

of either two 45° bends or one long radius bend both with a removable end cap and other necessary fittings/material

c. Roof Drains

Material

Roof drains shall be of bitumen coated cast iron/ brass or uPVC or of other anti-corrosive material, compatible with the material of pipe.

d. Gully Trap

Material

Gully trap shall be of cast iron with specified size outlet. The inlet shall be provided with cast iron, medium duty grating.

Manufacturers

- Dadex
- Tetra Plast
- Beta Pipes
- MAF Pipes

e. Electric Water Heater/Geysers:

Material

Inner tank shall be extra heavy gauge anti-rust G.I. sheet metal to hold maximum inside water pressure. As insulation, imported genuine glass wool shall be used to maintain the desired temperature that controls the liting up of the burner. The outer body shall be made of requisite gauge M.S. sheet shaped into reinforced circumference. Flow and delivery pipes shall be of high quality G.I. pipes fabricated with heavy gauge anti-rust baffle plate. Special anti-rust-baked primer-heavy coated stoved enamel paint with high gloss automotive shine shall be used on sheet metal.

Manufacturers

- Asia Geysers
- Canon Geysers
- Embassodar

SECTION – 19: EXCAVATION, TRENCHING AND BACKFILLING

1.1 SCOPE

The work covered by this section of the Technical Specifications consists of furnishing all plant, labour, equipment, appliances, and the materials for performing all operations in connection with excavation, trenching and back-filling for water supply, sewerage, storm drainage and structures including all incidental works necessary for excavation to the required depth and dimensions in accordance with the applicable drawings, or as directed by the Engineer. The work shall be carried out in complete conformity with the specifications, set forth hereunder.

1.2 SETTING OUT

The Contractor shall set out the works in accordance with the dimensions, lines and levels shown on the Drawings. Where no precise positions or levels are shown on the drawings, the works shall be set out by the Contractor to the positions and levels determined by the Engineer's Representative as the work proceeds.

1.3 CLEARING AND GRUBBING

The site of all excavations shall be cleared of all shrubs, plants, bushes, large roots, rubbish and other objectionable materials. All such materials shall be removed from site of work or otherwise disposed of at no extra cost in a manner satisfactory to the Engineer. All trees and shrubs that are designated by the Engineer to remain shall be adequately protected and preserved in an approved manner.

1.4 EXCAVATION

1.4.1 General

All excavation of whatever substance encountered shall be performed to the depths indicated or as otherwise specified. During excavation, material suitable for back-filling shall be stockpiled in an orderly manner at a sufficient distance from the banks of the excavation to avoid overloading and to prevent sides from caving. All excavated material unsuitable for backfill shall be removed and placed at a location approved by the Engineer. Grading shall be done as may be necessary to prevent surface water from flowing into the trenches or other excavations, and any water accumulated therein shall be removed by pumping or by other approved methods. Unless otherwise indicated or approved by the Engineer, excavation shall be open cut. For Contract purposes hereunder the earth excavation work has been classified into two categories, earth excavation in trenches and earth excavation for structures.

1.4.2 Earth Excavation in Trenches

Unless otherwise directed or permitted by the Engineer not more than 100 ft of any trench in advance of the end of the pipeline already laid shall be opened at any time. Trenches shall be excavated to the dimensions and depths shown on the drawings or ordered by the Engineer or in such a position or to such dimensions and depths as shall allow for the proper construction of the relevant structure or proper excavation of the relevant operation. Pipe trenches shall be excavated to give a clear width of 6 inches on either side of the pipe. Additional excavation shall be carried out to give ample space for making joints and where necessary, for concrete bedding or surrounding.

The banks of the pipe trench shall be as nearly vertical as practicable. Bell holes and depressions for joints shall be dug after the trench bottom has been prepared. The pipe, except for joints, shall rest on the prepared bottom for its full length. Bell holes and depressions shall be only of such length, depth, and width as required for properly making the particular type of joints. Stones shall be removed to avoid point bearing. Whenever wet or otherwise unstable material that is incapable of properly supporting the pipe as determined by the Engineer is encountered in the bottom of the trench, such material shall be removed to the depth required and the trench backfilled to the proper grade with coarse sand, or other suitable approved granular material. Such replacement of unsuitable material will be paid for at the contract unit price for that item of work as shall be agreed upon, before execution of this work, with the Engineer.

Where the Contractor has excavated to depths in excess of the requirements, from his neglect or from causes within his control, he shall refill and compact the excess excavation with suitable material approved by the Engineer, upto corrected level, at his own expense.

Excavation of appurtenances shall be sufficient to leave at least 12 inches but not more than 24 inches between the outer surface and the embankment or timber that may be used to hold and protect the banks. Any over-depth excavation below such appurtenances that has not been directed by the Engineer, will be considered un-authorized and shall be refilled with compacted sand, gravel or concrete, as directed by the Engineer and at no additional cost to the Employer.

1.4.3 Earth Excavation for Structures

All earth excavation under this contract, which is not included under the classification of "Earth excavation in Trenches" shall be classified and paid for as earth excavation for structures.

The Contractor shall provide adequate timbering or shoring for excavations, should the sides and ends of any excavations give way the Contractor shall, at no

extra cost, remove all disturbed ground. Any excavation carried outside the limits shown on drawings and specified herein as the payment limits, shall not be treated as excavated and shall not be paid for.

When foundation level or base of excavation is reached, the Engineer's representative will inspect the exposed ground and give directions as to what further excavation, if any, he considers necessary. The excavation should be done in such a manner, as to ensure that the work rests on a solid and perfectly clean foundation. If the Contractor allows any portion of such foundations to deteriorate due to exposure, he shall make good the foundation to the satisfaction of the Engineer without extra cost.

1.4.4 Replaced Soil Under Foundations

1.4.4.1 Material

Selected well graded granular material shall be used for filling beneath the structural foundations. This material should meet the requirements of A-2-4 & A-3 (Coarse Sand) as per AASHTO soil classification.

The suitability of the material shall be supported by adequate tests in the laboratory.

1.4.4.2 Equipment and Procedure

Suitable equipment shall be selected by the Contractor on the basis of field trials for compaction. The contractor shall indicate his planning to carry out compaction in his Method Statement for Engineer's approval before undertaking actual compaction. A test section would be required to select the most suitable equipment, layer thickness, moisture content, No. of passes etc.

1.4.4.3 Compaction Standard

The contractor shall place the material to be compacted in layers. Each layer shall be of specified thickness and shall be compacted by the optimum number of passes as explained in above section. Compaction less than 75% of relative density or 95% of Modified Proctor Density shall not be acceptable.

1.4.4.4 Quality Control

Every compacted layer shall be tested for quality of compaction by performing in-situ density tests. Sand replacement method of density measurement shall be used. The evaluation of 75% relative density or 95% Modified Proctor Density shall be based on measurement of

maximum, minimum and maximum Modified Proctor Densities in the laboratory. The frequency of this testing shall be instructed by the Engineer at the site.

1.5 PRECAUTIONARY AND REMEDIAL MEASURES

1.5.1 Protection of Existing Facilities and Structures

The Contractor shall take every necessary precaution not to endanger the safety, occupation or operation of any property, structures, installations or services in the vicinity of his operations and shall observe any restrictions imposed by the Authority concerned and the Engineer to this end. Should any such property, structures, installations or services be endangered or damaged as a result of the Contractor's operations, he shall immediately report any such danger or damage to the Engineer's Representative and any Authority concerned and shall forthwith undertake remedial measures to the satisfaction of the Engineer and the appropriate Authority with out additional cost.

1.5.2 Planking and Strutting

The Contractor shall provide at his own expense to the satisfaction of the Engineer all timbering, poling, shoring, strutting and other approved supports to the sides of all excavations, trenches and all other works in such a way as will be sufficient to secure them from falling and to prevent any movement. All responsibilities connected with this part of the work shall rest with the Contractor.

In removing timbering, shoring and strutting and all other supports from excavation and trenches, special care shall be taken to avoid pressure on fresh concrete or any other work until it is sufficiently safe to resist such pressure.

1.5.3 Dewatering

The Contractor shall build all drains and do ditching, pumping, well pointing, bailing, and all other work necessary to keep the excavation clear of ground water, sewage and storm water during the progress of the work and until the finished work is safe from potential injury. All water pumped or drained from the work shall be disposed of in a manner satisfactory to the Engineer and necessary precautions against flooding shall be taken. The procedure for dewatering of subsoil water from excavation for the purpose of construction of sewer lines and other structures shall be in accordance with the method given below:

- Dewatering of subsoil water from excavations of trenches and excavations for other structures shall be arranged by an adequate process of well-pointing, bailing and/or pumping or by any other suitable method approved by the Engineer on the basis of the method (statement to be

submitted by the Contractor).

- If well-points are used then the following requirements shall be met with. Well-pointing shall consist of bore holes, provided with necessary strainers, blind pipes and pumping machinery, and these shall be of suitable size and depth and shall be located on both sides of the trench and along the periphery of water level to a sufficient depth to keep the excavations clear of subsoil water during the process of construction.

- As a part of the work and at no extra cost, the Contractor shall provide all strainer pipes and other requisite material, and boring tools and plant, etc. for the well pointing and shall also provide pumping equipment as well as operating personnel, power, etc. Dewatering of subsoil water shall be continuous process round the clock during the progress of the work and until the finished work is safe, from potential injury to the complete satisfaction of the Engineer's representative and any interruption in continuous pumping and causing injury to the works done or under construction shall require the Contractor to repair or rebuild the works to the entire satisfaction of the Engineer's representative at no extra cost. No extra payment shall be made to the Contractor for the disposal of storm water and for dewatering in trenches and building structures less then 5 ft. depth.

1.5.4 Maintenance of Excavation

All excavation shall be properly maintained while open and exposed. Sufficient suitable barricades, warning lights, flood lights, reflective signs, and similar items shall be provided by the Contractor. The Contractor shall be responsible for any damage due to his negligence.

1.5.5 Surplus Materials

All surplus materials shall be disposed of at locations approved by the Engineer. The disposal of surplus material shall not interfere with other works and shall not damage or spoil other material. When it is necessary to haul earth or rock material over street or pavement, the Contractor shall prevent such material from falling on the street or pavement.

1.5.6 Cutting Pavement

In cutting or breaking street surfacing, the Contractor shall not use equipment which will damage the adjacent pavement. Existing paved surfaces shall be cut back beyond the edge of trenches to form neat square cuts. The road ballast, brick pavement, and other materials shall be placed on one side and shall be preserved for reinstatement when the trench is filled. Wherever necessary or required for the convenience of the public or individual residents, at street

crossings and at private driveways, the Contractor shall provide suitable temporary bridges which shall be maintained in service until backfilling has been completed. The Contractor shall keep the road crossings manned 24 hours per day. During night time, enough red lights shall be provided to warn the traffic. If detour is necessary, the Contractor shall make proper detour for the traffic and shall install signs 3 ft. x 4 ft. in size indicating the detour.

1.6 TRANSPORTATION OF MATERIAL

All carts, trucks or other vehicles used by the Contractor for transportation of the material shall be suitably constructed or lined not to permit any leakage/spillage of soil while the vehicles are on the move. These would be so loaded and arranged as not to spill on the site and public roads. Whenever any vehicle so used is found leaking/spilling and unsuitable, it shall be immediately withdrawn from the work on notification by the Engineer.

1.7 COMPACTED FILL AND BACKFILL

1.7.1 General

After the completion of water and sewer lines, foundations, walls and other structures below the elevation of the final grade, all voids shall be backfilled with suitable materials, as specified below.

1.7.2 Backfilling for Structures

Backfilling operations for structures shall be performed as part of the Contractor's work under the payment items for earth excavation and at no extra cost to the Owner. It would comprise returning and filling the selected excavated material around foundations, and at back of walls etc., upto finished levels shown on the Drawings or as required in layers not exceeding 6 inches, carefully rammed and consolidated (with addition of water if required) so as to achieve a minimum relative density of 90% of modified proctor test at optimum moisture content. No fill shall be made until the concrete foundations and footings etc., have been inspected and approved by the Engineer. Earth to be used for filling must be free of all the organic impurities, debris or any other foreign matter. Earth which contains more than 1% of salts particularly sulphates, will not be used in filling.

1.7.3 Backfilling of Trenches

The trenches shall not be completely backfilled until all required pressure tests are performed and until the water lines as installed conform to the requirements of specifications. Where in the opinion of the Engineer, damage is likely to result from withdrawing sheeting, shoring; the same shall be left in place and cut off at a level 1 ft. below ground surface. Sheeting left in place shall be paid for at the

approved rate for that item of work. Trenches shall be backfilled to the ground surface with selected excavated material or other material that is suitable for proper compaction. Trenches improperly backfilled shall be reopened to the depth required for proper compaction, then refilled and compacted to the specified density. The surface shall be restored to its original or better condition. Pavement and base course disturbed by trenching operations shall be replaced.

1.7.4 Lower Portion of Trench

Backfill material below and around pipe shall be deposited in 6 inch maximum thickness layers and compacted with suitable hand tampers to 90% of maximum density until there is a cover of not less than 1 ft. over the pipe. The backfill material in this portion of trench shall consist of sandy clay or other approved materials free from stones and lumps.

1.7.5 Remainder of Trench

The remainder of the trench portion above pipe shall be backfilled with material that is free from stones larger than 6 inch in any dimension. Backfill material shall be compacted to achieve a minimum relative density of 90% of modified proctor test at optimum moisture content for cohesive soils and 95 percent of maximum density for others.

1.8 BORROW

In case of insufficiency of excavated material and un-suitability of earth for backfilling, conforming to the above specifications, such material shall be brought from the source approved by the Engineer.

1.9 GRADING

After the completion of all backfilling operations, the Contractor shall grade the work areas to the lines, grades and elevations shown on the drawings or as directed by the Engineer. Finished grading shall not be done until the installation of all utilities or appurtenance. All damage due to settlement shall be repaired by and at the expense of the Contractor.

1.10 TESTING OF SOIL IN PLACE

The Engineer will make tests using the calibrated cone method/core cutter method to determine the density of soil in place. If soil in place fails to meet the specified degree of compaction the areas represented by the failing tests shall be removed, replaced and compacted to the specified density in the manner directed by the Engineer and at no additional cost to the Owner.

1.11 MEASUREMENT AND PAYMENT

Measurement and payment of all items described in this chapter will be paid in

accordance with BOQ items.

SECTION – 20: WATER SUPPLY PIPES, PIPE LAYING AND APPURTENANCES

1.1 SCOPE

The work covered by this Section of the specifications consists of furnishing all plant, labour, equipment, appliances and materials and of performing all operations in connection with water supply lines and appurtenances in strict accordance with this section of the specifications and the applicable Drawings.

1.2 MATERIALS

Material shall conform to the respective specifications and other requirements specified hereinafter and shall be new and unused.

1.2.1 Cast Iron Pipes and Fittings

Cast iron pipes and fittings shall comply with BS 78 for spigot and socket vertically cast pipes, BS 1211 for spigot and socket spun iron pipes and BS 2035 for flanged pipes.

1.2.2 Mild Steel Pipes

The mild steel pipes shall meet the requirements of API Standards 5L, latest edition, and additional requirements of these specifications. These pipe shall be capable of withstand pressure upto 300m. The pipe shall be protected from corrosion by providing cement lining, external relevant coating and cathodic protection to standards.

Types and Quality of Plates and strips

The material shall be from Siemens-martin, electric furnace or basic oxygen steel confirming to API 5L Gr x 52 or ASTM A572 Gr 55.

1.2.3 Galvanized Iron Pipes and Fittings

The galvanized iron pipes shall strictly conform to BS 1387-1967 "medium quality" Specifications for "Steel Tubes and Tubulars suitable for screwing to BS 21 pipe threads". All screwed pipes and sockets shall be of wrought iron have BS 1740. A complete and uniform adherent coating of zinc white will be provided for galvanized iron pipes and fittings.

1.2.4 Unplasticised Polyvinyl Chloride Pipe and Fittings

Unplasticised polyvinyl chloride (uPVC) and fittings as approved by the Engineer shall confirm to BS 3505, pipes shall be class B (6 bars): Pipe and fittings shall not be stored directly exposed to sunlight handled or laid in conditions where ambient temperatures may cause distortion or damage. In

extreme conditions, pipe and fittings may have to be stored under water.

1.2.4.1 Joints for Unplasticised Chloride Pipe

Joints for unplasticised polyvinyl chloride pipe shall be the Z type consisting of a socket with rubber gasket, or approved equal, and assembled in accordance with the pipe manufacture's recommendations.

1.2.5 Fiberglass Reinforced Plastic Pipes (GRP)

Fiberglass Reinforced Plastic Pipes shall conform to ASTM D3754. The pipe shall be supplied in standard nominal diameters (DN). The tolerance on the actual inside diameter shall be +/- 1 % of the nominal pipe ID or 6mm whichever is greater. GRP pipe shall be supplied in the following nominal lengths:

Diameter below 350mm	20 ft
Diameter 350mm and larger	40ft

Pipe joints shall be either of integral bell and spigot with rubber ring gasket or GRP coupling joints with two rubber seals. Joint shall meet the performance of ASTM D4161.

All relevant dimensions of pipes and fittings will be inspected in accordance with ASTM D3754 with AWWA 950.

All pipes shall have thickness suitable to withstand the working pressure as specified in the Bill of Quantities.

1.2.6 High Density Polyethylene Pipes (HDPE) and Fittings

High-density polyethylene pipes (HDPE) and fittings shall conform to ISO 4427/DIN 8074/8075 standards. Material, diameters, wall thickness shall be as indicated in 4427/DIN 8074. Pipe used for distribution main shall be PN-8 (PE-100) whereas pipe used for force main shall be minimum of PN-10 (PE-100) as mentioned in drawings and BOQ. Tests to be performed for pipes shall be Heat reversion, Short term hydrostatic pressure test and Tensile strength and for P.E. compounds shall be Elongation at break, Melt flow rate and Density test.

Warning tape shall be provided for lying over P.E. pipes. It should be single fold, 0.02 inch thick and 2 inch wide, with warning for digging continuously printed in Urdu language. The tape shall be placed one foot above the P.E. pipe.

Bricks on edge shall be placed on the P.E. pipes along its edge after it is laid in order to avoid any damage to the pipe.

1.2.7 Sluice/Gate Valve

Valves shall be wedge gate valves/check valve conforming to British Standard Specification 5163: 1974. Ends of valves shall be suitable for the type of pipe to

which the valves will be connected. The direction of flow should be marked by arrow on the body of the valve.

1.2.8 Check Valve

Check valve shall comply with the requirements of BSS 5153: 1974 or equivalent. The valve shall be of swing type and shall be of quick acting single door type.

1.2.9 Air Relief Valve

These valves are double action air relief valves with bolted bodies and flanges drilling to EN1092-PN 16 also known as BS 4504-DN 2501.

Ends of valves shall be suitable for the type of pipe to which the valves will be connected. The direction of flow should be marked by arrow on the body of the valve.

1.2.10 Fire Hydrants

The material of body metal of the fire hydrant shall conform to BS 1561 (Two way fire hydrant) and shall be of screw down streamline pattern. The body shall be best quality, closed grain, grey cast iron with outlet of copper alloy confirm to BS 1982. The seating valves and other parts shall be of best quality gun metal with Brinell Hardness No. 80. The direction of closing shall be by clockwise rotation and outlet shall have fire hose threads for accommodation of 2 1/2" dia hose connection. Inlet flanges of hydrant shall be suitable for jointing with flanges of hydrant bends and tees. All fire hydrants shall be coated with one coat of primer and two coats of signal red enamel paint approved manufacturer to give a uniform protective coating on cast iron.

1.2.11 Ferrule Assembly

Ferrule assembly shall consist of polyethylene saddle with clamps connected with 25mm polyethylene pipe (PN-10) for single house connections. Ferrule assembly including corporation cock for disconnection of approved quality and all other items related to make complete house connection.

1.2.12 Garden Hydrant

The garden hydrant shall be manufactured as per Drawings. Pipes used shall be of HDPE and G.I (High Quality) and gate valve shall be of cast iron.

1.3 APPROVAL OF MATERIALS AND EQUIPMENT

As soon as practicable but within 30 days after receipt of notice to proceed and before any materials or equipment are purchased, the Contractor shall submit for approval of the Engineer a complete schedule, in triplicate, of materials and equipment to be incorporated in the work, together with the names and addresses of the manufacturers

and their catalogue cuts, diagrams, drawings, and such other descriptive data as may be required by the Engineer. No consideration will be given to partial lists submitted from time to time. Approval of materials and equipment with deviations from the specifications shall not be construed as approval of the deviations unless they are specifically brought to the notice of the Engineer. Laboratory results and certifications, specified or otherwise required, shall be submitted prior to delivery of the material and equipment to site.

1.4 INSTALLATION

1.4.1 Handling

Pipe and accessories shall be handled in such a manner as to ensure their delivery to the trench in sound, un-damaged condition. If any pipe or fitting is damaged, the repair or replacement shall be made by the Contractor at his expenses in a satisfactory manner. No other pipe or material of any kind shall be placed inside of a pipe or fittings. Pipe shall be carried into position and not dragged. The interior of pipe and accessories shall be thoroughly cleaned of foreign matter before being lowered into the trench and shall be kept clean during laying operations by plugging or other approved method. Before installation, the pipe shall be inspected for defects. Material found to be defective before or after laying shall be replaced with sound material without additional expense to the Employer. Rubber gaskets that are not to be installed immediately shall be stored in a cool dark place and protected against the direct rays of the sun.

1.4.2 Cutting of Pipe

This shall be done in a neat and workman-like manner without damage to the pipe. Unless otherwise authorized by the Engineer or recommended by the manufacturer, cutting shall be done with a mechanical cutter of approved type. Wheel cutters shall be used wherever practicable.

1.4.3 Location

Where the location of the water pipe is not clearly defined by dimensions on the Drawings, the water pipe shall be located as directed by the Engineer.

1.4.4 Deflection

Maximum allowable deflections from a straight line or grade, as required by vertical curves, horizontal curves, or offsets will be as recommended by the manufacturer and as approved by the Engineer. If the alignment requires deflections in excess of the specified limitations, special bends or a sufficient number of shorter lengths of pipe shall be furnished to provide angular deflections within the limit setforth, as approved.

1.4.5 Placing and Laying

Pipe and accessories shall be carefully lowered into the trench by means of derrick ropes, belt slings, or other suitable equipment. Under no circumstances shall any of the water line materials be dropped or dumped into the trench. Care shall be taken to avoid

abrasion of the pipe coating. Poles used as levers shall be of wood and shall have broad flat faces to prevent damage to the pipe. Except where necessary in making connections with other lines or authorized by the Engineer, pipe shall be laid with the bells facing in the direction of laying. The full length of each section of pipe shall rest solidly upon the pipe bed, with recesses excavated to accommodate bell coupling and joints. Pipe that has the grade or the joint disturbed after laying shall be taken out and re-laid. Pipe shall not be laid in water shall be kept out of the trench until the materials in the joints have hardened or until caulking or jointing is completed. When work is not in progress, open ends of pipe, fittings, and valves shall be securely closed so that no trench water, earth, or other substances will enter the pipes or fittings. Where any part of a coating or lining is damaged, the repair shall be made by the Contractor at his own expense in a satisfactory manner. D.I pipes shall be installed in accordance with recommendations of the pipe manufacturer. Pipe ends left for future connections shall be provided with valve, plugged or capped, and anchored, as shown or as directed, where connections shall be made by using specials and fittings to suit the actual conditions.

Compacted sand bedding will be used for laying of pipes as shown in drawings.

1.4.6 Jointing

a. The joints shall be in accordance with the recommendations of the manufacturer or as approved by the Engineer.

b. Connections between different types of pipes and accessories shall be made with transition fittings where recommended by the pipe manufacturer.

c. Service connections shall be made as indicated and in accordance with the recommendations of the pipe manufacturer.

1.4.7 Setting out Fire Hydrants and Garden Hydrants

Fire hydrants shall be located and installed, as shown. Hydrants shall be set plumb and in accordance with the manufacturer's instructions.

Valves shall be installed as shown or directed and shall be set plumb. Concrete, concrete pipe, brick, brick ballast used in chambers shall conform to the relevant clause of the Specifications. Where feasible, valves shall be located outside the area of roads and streets. Earth fill shall be carefully tamped around each valve box to the satisfaction of Engineer on all sides of the box, or to the undisturbed trench face if less than 4 ft.

Hydrants and valves shall have the interiors cleaned of all foreign matter before installation. The hydrant or valve shall be inspected in open and closed positions to ensure that all parts are in working condition.

1.4.8 Thrust Blocks

Plugs, caps, tees, bends and fire hydrants shall be provided with concrete thrust blocks. Backing shall be placed between solid ground and the hydrant or fitting to be anchored. The area of bearing shall be as shown on the Drawing. The backing shall be so placed

that fitting joints shall be accessible for repair. The concrete shall be of plain cement concrete P.C.C (1:2:4).

1.5 FLUSHING

The Contractor shall provide facilities for flushing the line. Water for flushing the line shall be arranged by the Contractor. Flushing of line shall be done section by section. For each valved section of pipeline, the Contractor shall make a temporary hose connection between the water pipeline and the pipeline under test. Water shall be pumped into the section flushed. Other arrangements for storing and pumping of water shall be subject to the approval of Engineer. Due precautions shall be taken by the Contractor for the disposal of water. The pipeline shall be flushed by keeping all the branch pipes open. Flushing shall be continued until clean water starts flowing through the other end. Section by section, the entire pipeline shall be flushed at a minimum flushing velocity of 2.5 ft./sec.

1.6 LEAKAGE TEST

Flushing of the pipeline shall be followed by a leakage test. The Contractor shall provide facilities for performing the leakage test. Water and pumping facilities shall be provided by the Contractor. Before the testing of pipeline, the Contractor shall ensure that concrete backing blocks have been provided where necessary. The test shall be performed only after all concrete work in contact with pipe to be tested has set for a minimum of 72 hours. All joints shall be left exposed. Leakage test shall be performed by keeping the end of the pipeline closed by proper plugs blocked to resist 150 per cent of the actual working pressure. While filling the line all valves and openings shall be kept open and water shall be filled in slowly. When the pipeline is completely filled with water and all air expelled, water shall be pumped into the pipeline to a minimum pressure of 150 percent of actual working pressure and the test pressure shall be maintained for at least 30 minutes for each section of 330 feet. Each and every joint shall be inspected for leaks and for all visible leakage; a displacement leakage test shall be performed by the Contractor, for the newly laid pipeline. The pipeline shall be filled with water and all the air from the pipeline shall be expelled. No piping installation will be accepted until the leakage is equal or less than the number of imperial gallons per hour as determined by the formula:

$L = 0.00054 \times N \times D/P$
L = Leakage in Imperial Gallons
N = Number of joints
D = Nominal diameter of pipe in inches
P = Average test pressure (psi) during test

In the event of the pipeline failing the leakage test, the Contractor shall locate and repair the defective pipe, fitting or joint at his expenses. For dewatering the line for repairs the Contractor shall follow the instructions given by the Engineer for disposal of water. After repairs of the line, the Contractor shall retest the line. The line will not be accepted until it passes the leakage test.

1.7 RETESTING AFTER BACKFILL

After the pipe trench has been backfilled, the entire length shall be subjected to a leakage test as a whole unit. The Contractor shall repair the line if it fails to pass the leakage test requirements specified hereinbefore. The test shall be repeated until the pipeline passes the leakage test.

1.8 PIPELINE DISINFECTION

1.8.1 General

The Contractor shall furnish all equipment, labour and material for the proper disinfection of the pipeline. Disinfection shall be accomplished by chlorination after the lines have been successfully tested for leakage but before they have been connected to the main system. Disinfection of the pipelines shall be done in the presence of the Engineer's representative with equipment approved by him.

1.8.2 Chlorination

A chlorine and water mixture shall be supplied by means of a solution feed chlorination device. The chlorine solution shall be applied at one end of the pipeline through a trap, in such a manner that as the pipeline is filled with water, the dosage applied to the water entering the pipe shall be at least 25 ppm or enough to meet the requirements given hereinafter.

1.8.3 Retention Period

Chlorine solution shall be retained in the pipeline for a period of at least 24 hours. After the chlorine treated water has been retained for the required time, the chlorine residual at the pipe extremities and at such other representative points shall be at least 10 parts per million. This procedure shall be repeated until the required residual chlorine concentration is obtained.

1.8.4 Chlorination of Valves

During the process of chlorination of the pipeline, all valves or other appurtenances shall be operated while the pipeline is filled with the heavily chlorinated water.

1.9 FINAL FLUSHING

Following complete disinfection of the pipeline, all treated water shall be thoroughly flushed from the pipeline at its extremities. Treated water and water used for flushing the pipelines shall be disposed off in a manner instructed by the Engineer. Fresh treated water shall be filled in the line and water tested for presence of coliform. The test result should indicate negative coliform presence. If the test indicates any positive coliform, the entire process of disinfection shall be repeated until coliform free samples are obtained.

1.10 WATER SAMPLING AND TESTING

Disinfection of the pipeline and appurtenances shall be the responsibility of the Contractor. The first set of samples will be collected for analysis by the Engineer. Should the sample reveal presence of coliform, the Contractor shall again disinfect the pipeline and appurtenance and shall pay the Owner for sampling and testing for subsequent retests until coliform free samples are obtained. The charges for resampling and retesting shall be paid by the Contractor.

1.11 CLEAN-UP

Upon completion of the installation of the water supply lines, distribution system and appurtenance, all debris and surplus materials resulting from the work will be removed and disposed off in a manner satisfactory to the Engineer.

1.12 INDICATION PLATES

The indication plates shall be installed in accordance with the drawings and as directed by the Engineer.

1.13 WASHOUTS

The design and locations of washouts shall be illustrated on the Drawings and to be approved by the Engineer. Exact positioning shall be determined with regard to topography and to the approval of the Engineer. At least 10 ft. of the washout pipe work, inclusive of the isolating valve, measured from the center line of the pipeline, shall be laid at the same time as the pipeline and suitably capped to prevent ingress of foreign material. The minimum gradient for the washout pipe work shall be 1 in 100.

1.14 AIR VALVES

1.14.1 Double Orifice Air Valves

These shall be designed to meet the following conditions:

i) Expulsion of air during charging of the pipeline

ii) Admit air during emptying of the pipeline to avoid the occurrence of negative pressure

iii) Expulsion of air accumulated at summit points along the pipeline under normal operating conditions

Conditions (i) and (ii) shall be met by the employment of a large orifice capable of handling large volumes of air at high flow rate, and condition (iii) by a small orifice capable of discharging small quantities of air as they accumulate.

The large orifice shall be sealed by a buoyant rigid ball and the chamber housing shall be designed to avoid premature closing of the valve by the air whilst being discharged. The

small orifice shall be sealed by a buoyant ball at all pressures above atmospheric except when air accumulates in the valve chamber.

The nominal pressure shall be PN-10 for air valves on potable water lines and PN-16 for air valves on fire water lines.

1.15 MEASUREMENT AND PAYMENT

Measurement and payment of all items described in this chapter will be paid in accordance with BOQ items.

1.0 SANITARY SEWERAGE

1.1 SCOPE

The work covered by this section of the specifications consists of furnishing all reinforced concrete pipes, plant, labour, equipment, appliances and materials and of performing all operations required for installing and testing the sewer pipes in strict accordance with the specifications of this section and the applicable drawings and subject to the terms and conditions of the contract.

1.2 MATERIALS

1.2.1 Reinforced Cement Pipes

All materials used in the manufacture of reinforced cement concrete pipes for use under this contract shall conform ASTM Designation C-76-91 or latest revision and also with the following specifications.

1.2.1.1 Cement

The Ordinary Portland Cement to be used in the manufacture of reinforced concrete pipes shall conform to the requirement of ASTM's relevant Designation C 150 (latest revision).

1.2.1.2 Aggregates

The coarse/fine aggregate to be used in the manufacture of concrete pipes to be furnished and installed under this contract shall be generally in accordance with the provisions of section of these specifications.

1.2.1.3 Water

Water to be used in the manufacture of pipes shall be approved by the Engineer.

1.2.1.4 Steel Reinforcement

The material shall conform to the specifications contained in relevant Section of these specifications.

1.2.1.5 Stone Ballast

Stone ballast shall have a maximum gauge of 1 1/2 inch and shall be graded down to 3/4 inch and shall not contain more than 10% which will pass through screen made of 1/4 in. diameter

bars spaced at 3/4 in. centre to centre.

1.2.2 Unplasticised Polyvinyl Chloride Pipe and Fittings

Unplasticised polyvinyl chloride (uPVC) and fittings as approved by the Engineer shall confirm to EN 1401, pipes shall be of minimum SN 8 (SDR 34). Pipe and fittings shall not be stored directly exposed to sunlight handled or laid in conditions where ambient temperatures may cause distortion or damage. In extreme conditions, pipe and fittings may have to be stored under water.

1.2.2.1 Joints for Unplasticised Chloride Pipe

Joints for unplasticised polyvinyl chloride pipe shall be the Z type(Rubber Ring/ Push fit Jointing) consisting of a socket with rubber gasket of approved quality, or approved equal, and assembled in accordance with the pipe manufacture's recommendations i.e the cut end of the pipe should be de-burred and the spigot or plain ended fitting should preferably be chamfered.

1.3 CLASSES OF PIPE

The reinforced cement concrete pipes to be furnished and installed under this contract shall be of the strength Class II or specified otherwise on the Drawings.

Following technical criteria shall be adhered to:

Class of Pipe	:	Class IV
Concrete Strength	:	4000 Psi (Cylinder Test)

The design requirements for these classes of reinforced cement concrete pipes shall be as described in ASTM Designation C-76, in drawings for the respective strength classes. Unless otherwise called for in other parts of these Technical Specifications or applicable variation order, all reinforced cement concrete pipes under this contract shall comply with the Wall B design requirements as set forth in said Table 1 to 5 of ASTM Designation C-76-91 or latest revision.

Pipe material having diameter equal to or less than 12" shall be uPVC non pressure pipe for external sewerage system. These pipes shall confirm to EN 1401.

1.4 BASIS OF ACCEPTANCE

Acceptance of reinforced cement concrete pipes will be on the basis of three edge bearing and material tests as per ASTM Designation C-76-91 or latest revision and inspection of manufactured pipes for defects and imperfections. The Contractor shall bear the cost of such tests and pay fees etc., and also pay for the carriage of such samples and all other expenses contingent to tests.

1.5 PIPE DIMENSIONS

The internal diameters and wall thicknesses of reinforced concrete pipes under this contract shall be as set forth in ASTM Designation C-76-91 for "Wall B" pipes as required and shown on the Drawings.

The lengths of reinforced concrete pipes under this contract shall be as required to provide the designated laying length plus any overlap needed for the pipe joint. Pipe shall be of standard length of 8 ft. unless otherwise approved in writing by the Engineer. Only one laying length shall be permitted for each size of reinforced concrete pipe under this contract and pipes not of the approved uniform laying length shall not be used in the work. Each layer of circumferential reinforcement shall be assembled into a rigid case supported by 4 Nos. longitudinal bar of quarter inch diameter.

The strength test requirements in pounds per linear foot of pipe under the three-edge-bearing method shall be either the D-Load (test load expressed in pounds per linear foot per foot of diameter) to produce 0.01 in crack, or D-loads to produce the 0.01 in crack and the ultimate load as specified below, multiplied by the internal diameter of the pipe in ft.

D-Load to produce a 0.01 in crack = 1000 pounds
D-Load to produce the ultimate load = 1500 pounds

Lift holes in the walls of reinforced cement concrete pipes will not be permitted under this contract for the purpose of handling and laying. Other approved lifting methods shall be employed.

1.6 CERTIFIED DRAWINGS AND DATA SHEETS

The Contractor shall submit in triplicate, for approval by the Engineer certified drawings and data sheets as required to provide complete information on all concrete sewer pipes, dimensions, type and dimensions of pipe ends, joint details, proposed concrete design mix for each different strength class of reinforced pipe and any other information needed to demonstrate full compliance with these specifications.

No concrete sewer pipe shall be delivered to the work site until the Engineer has formally approved the certified drawings and data sheets and until all test requirements called for in the respective ASTM Standard Specifications C-76 or latest revision have been met.

1.7 JOINTS FOR CONCRETE PIPE SEWERS

Rubber gasket joints shall be used for either tongue and groove or bell and spigot pipes.

Rubber gasket joints shall be made using specially designed rubber gaskets, made to fit the applicable tongue and groove or bell and spigot pipes and adequately tested under operating conditions. Special care must be taken in the selection and handling of the concrete pipes for use with rubber gasket joints, to ensure that pipe ends shall be smooth and concentric with tolerance which closely conform to the requirements of the manufacturer of the rubber gaskets. The tongue or spigot end of each pipe shall be specially designed to perform groove or offsets to fit the manufacturer's rubber gaskets design.

The rubber gasket joints shall conform to all applicable requirements of the latest revision of ASTM Designation C443, entitled "Joints for Circular Concrete Sewer and Culvert pipe, using Flexible Watertight Rubber Type Gaskets" except that the test pressure need not exceed 10 feet of head at which the complete sewers shall meet the infiltration or ex-filtration limits set forth hereinafter.

The groove end of tongue and groove of pipes shall have at least one line of wire reinforcement of 8 gauge size placed in the centre of the groove.

The rubber gasket shall be installed on the pipe in accordance with the instructions of the gasket manufacturer. In general the gaskets shall be pre-assembled to the pipe at the pipe manufacturing plant. The pipes shall be handled with special care at all times to prevent damage to the pipe ends. A lubricant shall be used for jointing the pipes as recommended by the rubber gasket manufacturer. Care shall be taken to avoid contamination of the gasket and lubricated surfaces with earth or other undesirable material during installation.

For either tongue and groove or bell and spigot pipes, mechanical means shall be used to pull the pipe home for all sizes of 12" or larger diameter in accordance with the recommendations of the rubber gasket manufacturer. Pipes of 8"/9" diameter may be coupled manually using a cross member and bar. Under no circumstances will bars alone be used nor shall any motor driven equipment be used to force the pipe home.

1.8 HOUSE CONNECTIONS

House Connections shall be made through manholes as indicated in the drawings or as directed by the Engineer.

One manhole is provided for two house connection. The outlet of each connection shall be plugged with PCC (1:2:4) at connection with the manhole.

1.9 GULLY GRATING

Gully grating shall be connected with manholes as indicated in the drawings or as directed by the Engineer.

Gully grating shall be provided on the road junctions as mentioned in the drawings by means of a 8" dia uPVC pipe connecting the nearest manhole with

the chamber of size 1'-6"x1'-6". The pipe is laid in such a manner that other services such as water supply and sewerage system are not disturbed or interfered. The work of laying uPVC pipe shall conform to the specifications laid down in the relevant section of this contract. Approved grating shall be fixed at the top.

1.10 INSTALLATION

1.10.1 Handling of Pipes

Concrete sewer pipes shall be handled with special care at all times during the manufacture, while transporting to the site of work, and while installing. Each pipe shall be carefully inspected before being laid and no cracked, broken or defective pipe shall be used in the work. Chipping of the tongue and groove or bell and spigot pipe ends, which in the Engineer's opinion may cause defective joints, shall be sufficient cause for the rejection of any concrete pipe.

1.10.2 Excavation and Backfill

The excavation and backfill for sewer installations shall be as specified in applicable provisions of these technical specifications and will be paid for under separate contract items as classified and as per applicable variation orders.

1.10.3 Types of Bedding

1.10.3.1 Brick Ballast Bedding

The brick ballast shall be clean material of 1 to 1 1/2 inch gauge broken from first class bricks or bats, or from dense over burnt bricks. No under-burnt bricks or bats nor those which have become spongy or porous in the process of burning shall be broken up for brick ballast.

The material shall be evenly spread over the full width of the formation in 4 inches loose layers and compacted with hand or mechanical hammers until the full thickness as shown on the drawings for the particular pipe size has been built up and finished not more than 1/2" below required level. The Contractor shall note that it is essential that the material at the sides of the pipes is adequately compacted. Before the subsequent placing of pipe surrounding material, pipe joints shall be protected. Protection may take the form of a twist of yarn lightly pressed into the annular joints space or other equal protection approved by the Engineer's Representative.

1.10.3.2 Crushed Stone Bedding

Crushed stone bedding shall be from an approved source. It shall be strong, durable, hard and impervious, having crystalline structure. The broken stone shall have sharp edges and clear fractured faces, shall be free from thin elongated or laminated pieces.

The crushed stone shall have a maximum gauge of 1 1/2" and shall be graded down to 3/4". When shifted through a screen made of 1/4" diameter bars spaced 3/4" center to center, it shall yield no more than 10 percent by volume of fine materials.

1.10.3.3 Sand Bedding

Sand bedding shall be from an approved source. The sand used will be free from clay and any other granular material.

Sand shall be compacted before laying of pipes.

1.10.4 Laying of Sewers

Neither any sewer pipe nor the bedding shall be laid or placed till the alignment of the sewer and its levels and gradients have been carefully checked and tested with the trench excavation and found correct.

Each length of sewer pipe shall be checked for cracks and defects before placing in the line. Defects which in the opinion of the Engineer indicate imperfect placing, shall make, the pipe liable to rejection. Each pipe shall be placed carefully to line and grade and in close contact with adjoining pipe. These specifications require rejection of the work if the sewer invert varies as much 1/2 inch from the proper elevation. As shown on Drawings, the bottom of the trench must be shaped to fit the pipe barrel, with holes left for the bells. If excavation has been carried below the correct grade, refilling must be done with satisfactory materials as approved by the Engineer at no extra cost. The concrete pipe joints shall be of the type specified above and shall be made in accordance with the aforesaid specifications.

When laying is not in progress, the open pipe shall be closed with a tapered wooden plug to keep out foreign matter.

1.11 TESTING OF SEWER LINES

1.11.1 General

All sewer built under this contract shall be tested for infiltration or ex-filtration as specified below. The tests shall be made at times selected or approved by the Engineer. Sections of the completed sewer shall be isolated and measurements of the infiltration or ex-filtration shall be made by approved method. The contractor shall furnish all labour,

material and equipment required for making the tests with no extra compensation over and above the agreed contract prices for the laying of sewer lines.

1.11.2 Infiltration Tests

The sewers which are constructed with the ground water level above the invert level of the pipe shall be tested for infiltration after the sewers have been installed and backfilling has been substantially completed. The tests and measurement shall be performed by the Contractor in the presence of and in a manner approved by the Engineer. The duration of the tests shall be only long enough to establish the true rate of infiltration. The amount of leakage over a 24 hour period will then be calculated from the result of the measured true rate of infiltration.

1.11.3 Ex-filtration Tests

The sewers which are constructed with the ground water level below the invert level of the pipe shall be tested for ex-filtration by isolating a section of sewers between manholes by means of approved temporary type of water tight bulk heads. The method of testing for ex-filtration shall be generally as follows:

1. After isolation of sewer section, it shall be filled with water to a level which is 3' above the crown of the pipe at the higher end of the isolated section under test. The level will not be more than 6 ft. above the invert level of the sewer pipe at its lower end.

2. The duration of the ex-filtration test shall be one hour after the filling with water has been completed.

3. Determination of the amount of ex-filtration shall be made by measuring the total loss of volume of water in the manholes.

4. The amount of ex-filtration over a 24 hour period will then be calculated from the measured loss of volume during the test observation period.

1.11.4 Allowable Infiltration or Ex-filtration

The calculated amount of infiltration or ex-filtration over a 24 hour period shall not exceed 500 gallons per inch of pipe diameter per mile of sewer which rate shall be applied to the actual sewer size and length tested to determine the allowable infiltration or ex-filtration over the 24 hour period.

If the measured infiltration or ex-filtration exceeds the specified

allowable limit, then the Contractor shall locate the points of leakage and make necessary repairs so as to reduce the leakage to less than the permissible maximum stated above.

1.11.5 Cleaning of Sewer Lines

The contractor shall clean all the sewer lines at no extra cost with the method approved by the site Engineer prior to handing it over to the Owner.

1.12 MEASUREMENT AND PAYMENTS

Measurement and payment of all items described in this chapter will be paid in accordance with BOQ items.

SECTION - 22: CONSTRUCTION OF MANHOLES

1.1 SCOPE

The work consists of constructing manholes for sewerage at positions shown on the plans or where otherwise directed by the Engineer, and in accordance with the detailed drawings supplied from time to time, complete in all respects. The Contractor shall furnish all plant, labour equipment and materials in performing all operations in connection with the construction of manholes.

The various items of work involved in the construction of manholes shall be carried out strictly in accordance with respective technical specifications laid down for the item of work in these tender documents.

1.2 MATERIALS

Reinforced cement concrete (RCC) shall meet the specified requirements of the relevant sections of the specifications. Mild Steel frame shall conform to the specifications as per B.S. 449. Manhole steps shall be of malleable Cast Iron.

1.3 CONSTRUCTION REQUIREMENTS

Manholes shall be constructed with RCC built on P.C.C (1:2:4) concrete (1000 psi). The cover slab shall be of R.C.C 1:2:4 (reinforced cement concrete) 3000 psi, fitted with MS frame which shall have reinforced cement concrete cover as shown in the plans. Reinforcement and concrete shall conform to the requirements of Section "CONCRETE". The outside and inside of the walls shall be plastered (1/2 inch thick) with 1:3 cement sand mortar and two coats of hot PB-4 bitumen shall be applied outside. At the bottom of manholes for sewers, a proper channel as per Drawings, shall be constructed in the whole length of the manhole along the centre line of the sewers, to lead the sewage from one sewer to the other. Malleable Cast Iron steps shall be installed at 12 inches interval inside the manhole during the construction of the manhole walls. Cutting holes into the wall for the steps after construction will not be permitted. Top rung shall be 18 inches below the manhole cover and the lowest not more than 12 inches above the benching (floor).

Depth of manhole shall be from invert level of sewer to the top of manhole.

1.3.1 Drop Manhole

The Contractor shall construct drop manholes wherever shown in the drawings or ordered by Engineer's representative. The Contractor shall make the drop connection as shown on the drawings or ordered by the Engineer's Representative.

1.4 MEASUREMENT AND PAYMENT

Measurement and payment of all items described in this chapter will be paid in accordance with BOQ items.

Drawings
Attached as Annexure-B

PROGRAM MANAGEMENT UNIT PICIIP (LG&CD DEPARTMENT)

PUNJAB INTERMEDIATE CITIES IMPROVEMENT INVESTMENTPROGRAM (PICIIP)

MISCELLANEOUS CIVIL WORKS FOR PARKING SHEDS
FOR SOLID WASTE MACHINERY IN SAHIWAL AND SIALKOT CITY

ANNEXURE-B
TENDER DRAWINGS

DECEMBER, 2021

NATIONAL ENGINEERING SERVICES PAKISTAN (PVT) LIMITED
NESPAK H□□se, 1□C, Bl□□□□N, M□del T□□ □ E□□e□si□□, L□h□re□□4□00, P□□is□□□
PAB□□□2 42 □□0□0000 F□□□□2 42 □□2□1□40
E□□ □il□e□he□ □es□□□.□□□.□□ We□si□e□□ □ □.□es□□□.□□□.□□

Clearance Code 3976/11/D/19/(21) Rev. No. 1

PROGRAM MANAGEMENT UNIT, PUNJAB INTERMEDIATE CITIES IMPROVEMENT INVESTMENT PROGRAM (PICIIP), LOCAL GOVERNMENT AND COMMUNITY DEVELOPMENT (LG & CD) DEPARTMENT, PUNJAB)

CONSULTING SERVICES FOR ENGINEERING, PROCUREMENT
AND CONSTRUCTION MANAGEMENT (EPCM) CONSULTANT.
PACKAGE NO. PICIIP-CONS 2

PARKING SHEDS & ALLIED STRUCTURES AT SAHIWAL & SIALKOT (CITY)

LIST OF DRAWINGS

SR. NO.	DRAWING NO.	TITLE
		FAREED TOWN, SAHIWAL
		Architectural & Structural Works
01	3976/033/TD/G001	Covered Parking Shed At Fareed Town, Sahiwal General Notes
02	3976/033/TD/3G01	Covered Parking Shed at Fareed Town, Sahiwal Boundary Wall (Foundation & Sections)
03	3976/033/TD/2G01	Covered Parking Sheds at Fareed Town, Sahiwal Office Building - Foundation Plan & Sections (Concrete Outline & Reinforcement)
04	3976/033/TD/2G02	Covered Parking Sheds at Fareed Town, Sahiwal Office Building - Roof Slab Plan & Sections (Concrete Outline & Reinforcement)
05	3976/033/TD/1G01	Covered Parking Shed at Fareed Town, Sahiwal Storm Drain Concrete Outline & Reinforcement
06	3976/311/TD/B01a	Parking Sheds & Allied Structures Fareed Town, Sahiwal Layout Plan
07	3976/311/TD/B01	Parking Sheds & Allied Structures Fareed Town, Sahiwal Layout Plan
08	3976/311/TD/B02	Office Building Covered Parking Shed at Fareed Town, Sahiwal (Plan, Elevation & Section)
09	3976/311/TD/B03	Office Building Covered Parking Shed at Fareed Town, Sahiwal Doors & Windows Details
10	3976/311/TD/B04	Parking Sheds & Allied Structures Fareed Town, Sahiwal Plan & Elevation of Main Gate
11	3976/311/TD/B05	Parking Sheds & Allied Structures Fareed Town, Sahiwal Details of Sec. Guard Room & Boundary Wall
		Electrification Works
12	3976/161/TD/5E001	Covered Parking Shed at Fareed Town, Sahiwal Legends, General Notes Lighting Fitting for Schedule and Earth Point Details
13	3976/161/TD/5E002	Covered Parking Shed at Fareed Town, Sahiwal Single Line Diagram
14	3976/161/TD/5E003	Covered Parking Shed at Fareed Town, Sahiwal Office Building Electrification Layout Plan
15	3976/161/TD/5E004	Covered Parking Shed at Fareed Town, Sahiwal Area Lighting Layout Plan
16	3976/161/TD/5E005	Covered Parking Shed at Fareed Town, Sahiwal Guard Room Electrification Layout Plan
17	3976/161/TD/5E006	Covered Parking Shed at Fareed Town, Sahiwal Details of 10M Conical Octagonal Lighting Pole Single Arm
		Scada & Telecom Works
18	3976/166/TD/IS001	Covered Parking Shed at Fareed Town, Sahiwal IP Based Video Surveillance System
19	3976/166/TD/IS002	Covered Parking Shed at Fareed Town, Sahiwal IP Based Video Surveillance System
20	3976/166/TD/IS003	Covered Parking Shed at Fareed Town, Sahiwal Office Building
		Transportation Works
21	3976/102/PC-1/XS01	Covered Parking Shed at Fareed Town, Sahiwal Plan of Typical X-Section
22	3976/102/PC-1/XS02	Covered Parking Shed at Fareed Town, Sahiwal Typical X-Section
		Plumbing Water Supply System & Drainage Works
23	3976/11/TD/4J00	Covered Parking Sheds at Fareed Town, Sahiwal Office Building (Legends & Notes)
24	3976/11/TD/4J01	Covered Parking Sheds at Fareed Town, Sahiwal Office Building Water Supply System
25	3976/11/TD/4J02	Covered Parking Sheds at Fareed Town, Sahiwal Office Building Sewerage System
26	3976/11/TD/4J03	Covered Parking Sheds at Fareed Town, Sahiwal Office Building Septic Tank
27	3976/11/TD/4J04	Covered Parking Sheds at Fareed Town, Sahiwal Office Building Miscellaneous Plumbing Details
28	3976/11/TD/4J05	Covered Parking Sheds at Fareed Town, Sahiwal Office Building Miscellaneous Plumbing Details
29	3976/11/TD/3J00	Covered Parking Sheds at Fareed Town, Sahiwal (Legends & Notes)
30	3976/11/TD/3J01	Covered Parking Sheds at Fareed Town, Sahiwal Storm Water Drainage System (Layout Plan and Levels)
31	3976/11/TD/3J02	Covered Parking Sheds Miscellaneous Details
		MUBARAKPURA CAPITAL ROAD, SIALKOT
		Architectural & Structural Works
32	3976/033/TD/G001	Covered Parking Sheds & Allied Structures Mubarakpura Capital Road, Sialkot General Notes
33	3976/033/TD/3G01	Parking Sheds & Allied Structures at Mubarakpura Capital Road, Sialkot Boundary Wall (Foundation & Sections)
34	3976/033/TD/2G01	Covered Parking Sheds at Mubarakpura Capital Road, Sialkot Office Building Foundation Plan & Section (Concrete Outline & Reinforcement)
35	3976/033/TD/2G02	Covered Parking Sheds at Mubarakpura Capital Road, Sialkot Office Building Roof Slab Plan & Section (Concrete Outline & Reinforcement)
36	3976/033/TD/2G01	Covered Parking Shed Mubarakpura Capital Road, Sialkot Storm Drain Concrete Outline & Reinforcement
37	3976/311/TD/B01a	Parking Sheds & Allied Structures at Mubarakpura Capital Road, Sialkot Topographic Survey
38	3976/311/TD/B01	Parking Sheds & Allied Structures at Mubarakpura Capital Road, Sialkot Layout Plan
39	3976/311/TD/B02	Office Building Covered Parking Shed at Mubarakpura Capital Road, Sialkot (Plan, Elevation & Section)
40	3976/311/TD/B03	Office Building Covered Parking Shed at Mubarakpura Capital Road, Sialkot Doors & Windows Details
41	3976/311/TD/B04	Parking Sheds & Allied Structures at Mubarakpura Capital Road, Sialkot Plan & Elevation of Main Gate
42	3976/311/TD/B05	Parking Sheds & Allied Structures at Mubarakpura Capital Road, Sialkot Details of Sec. Guard Room & Boundary Wall
		Electrification Works
43	3976/161/TD/5E001	Parking Sheds & Allied Structures at Mubarakpura Capital Road, Sialkot Legends, General Notes Lighting Fitting for Schedule and Earth Point Details
44	3976/161/TD/5E002	Parking Sheds & Allied Structures at Mubarakpura Capital Road, Sialkot Office Building Electrification Layout Plan
45	3976/161/TD/5E003	Parking Sheds & Allied Structures at Mubarakpura Capital Road, Sialkot Office Building Electrification Layout Plan
46	3976/161/TD/5E004	Parking Sheds & Allied Structures at Mubarakpura Capital Road, Sialkot Area Lighting Layout Plan
47	3976/161/TD/5E005	Parking Sheds & Allied Structures at Mubarakpura Capital Road, Sialkot Guard Room Electrification Layout Plan
48	3976/161/TD/5E006	Parking Sheds & Allied Structures at Mubarakpura Capital Road, Sialkot Details of 10M Conical Octagonal Lighting Pole Single Arm
		Scada & Telecom Works
49	3976/166/TD/IS001	Covered Parking Shed at Mubarakpura Capital Road, Sialkot Office Building IP Based Video Surveillance System
50	3976/166/TD/IS002	Covered Parking Shed at Mubarakpura Capital Road, Sialkot Office Building IP Based Video Surveillance System
51	3976/166/TD/IS003	Covered Parking Shed at Mubarakpura Capital Road, Sialkot Office Building Office Building
		Transportation Works
52	3976/102/PC-1/XS05	Covered Parking Shed at Mubarakpura Capital Road, Sialkot Plan of Typical X-Section
53	3976/102/PC-1/XS06	Covered Parking Shed at Mubarakpura Capital Road, Sialkot Typical X-Section
		Plumbing Water Supply System & Drainage Works
54	3976/11/TD/4J00	Parking Sheds at Mubarakpura Capital Road, Sialkot Office Building (Legends & Notes)
55	3976/11/TD/4J01	Parking Sheds at Mubarakpura Capital Road, Sialkot Office Building Water supply System
56	3976/11/TD/4J02	Parking Sheds at Mubarakpura Capital Road, Sialkot Office Building Sewerage System
57	3976/11/TD/4J03	Parking Sheds at Mubarakpura Capital Road, Sialkot Office Building Septic Tank
58	3976/11/TD/4J04	Parking Sheds at Mubarakpura Capital Road, Sialkot Office Building Miscellaneous Plumbing Details
59	3976/11/TD/4J05	Parking Sheds at Mubarakpura Capital Road, Sialkot Office Building Miscellaneous Plumbing Details
60	3976/11/TD/3J00	Covered Parking Sheds Storm Water Drainage System (Legends & Notes)
61	3976/11/TD/3J01	Parking Sheds & Allied Structures Mubarakpura Capital Road, Sialkot Storm Water Drainage System (Layout Plan and Levels)
62	3976/11/TD/3J02	Covered Parking Sheds Miscellaneous Details
		ALLAMA IQBAL TOWN, SIALKOT
		Architectural & Structural Works
63	3976/033/TD/G001	Covered Parking Sheds & Allied Structures Allma Iqbal Town, Sialkot General Notes
64	3976/033/TD/3G01	Covered Parking Shed Allama Iqbal Town, Sialkot Storm Drain Concrete Outline & Reinforcement
65	3976/311/TD/B01a	Parking Sheds & Allied Structures Allama Iqbal Town, Sialkot Topographic Survey
66	3976/311/TD/B01	Parking Shed & Allied Structures at Allama Iqbal Town, Sialkot Layout Plan
67	3976/311/TD/B02	Parking Shed & Allied Structures at Allama Iqbal Town, Sialkot Plan & Elevation of Main Gate
68	3976/311/TD/B03	Parking Shed & Allied Structures at Allama Iqbal Town, Sialkot Sec. Guard Room Plan, Elevation, Sections & Details
		Electrification Works
69	3976/161/TD/5E001	Covered Parking Shed Allama Iqbal Town, Sialkot Legends, General Notes Lighting Fitting for Schedule and Earth Point Details
70	3976/161/TD/5E002	Covered Parking Shed at Allama Iqbal Town, Sialkot Single Line Diagram
71	3976/161/TD/5E003	Covered Parking Shed at Allama Iqbal Town, Sialkot Area Lighting Layout Plan
72	3976/161/TD/5E004	Covered Parking Shed at Allama Iqbal Town, Sialkot Guard Room Electrification Layout Plan
73	3976/161/TD/5E005	Covered Parking Shed at Allama Iqbal Town, Sialkot Details of 10M Conical Octagonal Lighting Pole Single Arm
		Transportation Works
74	3976/102/PC-1/XS03	Covered Parking Shed at Allama Iqbal Town, Sialkot Plan of Typical X-Section
75	3976/102/PC-1/XS04	Covered Parking Shed at Allama Iqbal Town, Sialkot Typical X-Section
		Drainage System
76	3976/11/TD/3J02	Covered Parking Sheds at Allama Iqbal Town, Sialkot Storm Water Drainage System (Layout Plan and Levels)

GENERAL NOTES

1. GENERAL

1- ALL LEVELS AND DIMENSIONS ARE IN FEET & INCHES UNLESS OTHERWISE NOTED.
2- ALL STRUCTURAL DRAWINGS SHALL BE READ IN CONJUNCTION WITH ARCHITECTURAL, PLUMBING/SEWERAGE, MECHANICAL, ELECTRICAL AND ANY OTHER RELEVANT DRAWING.
3- NOTES GIVEN ON THIS DRAWING ARE APPLICABLE TO ALL DRAWINGS UNLESS MENTIONED OTHERWISE. NOTES WRITTEN ON A DRAWING, SHALL BE APPLICABLE TO THAT PARTICULAR DRAWING ONLY UNLESS OTHERWISE CROSS-REFERRED.
4- ALL MATERIALS AND WORKMANSHIP SHALL CONFORM TO THE SPECIFICATIONS OF THE CONTRACT DOCUMENTS. IN THE ABSENCE OF ANY SPECIFICATIONS, ALL MATERIALS & WORKMANSHIP SHALL CONFORM TO THE RELEVANT ACI, BRITISH OR PAKISTANI CODES & STANDARDS AND SHALL BE SUBJECTED TO THE APPROVAL OF THE ENGINEER.
5- THE CONTRACTOR SHALL BE RESPONSIBLE FOR THE SAFETY OF THE STRUCTURES DURING CONSTRUCTION. HE SHALL ALSO VERIFY ALL DIMENSIONS AND LEVELS BEFORE EXECUTION OF WORK. ANY DISCREPANCY, ERROR OR OMISSION, IF FOUND, SHALL BE BROUGHT TO THE NOTICE OF THE ENGINEER FOR CORRECTION AND APPROVAL.
6- THE CONTRACTOR SHALL COORDINATE WITH ARCHITECTURAL AND VARIOUS SERVICE DRAWINGS FOR SIZES & LOCATION OF ALL STRUCTURAL MEMBERS, FLOORS, WALLS, OPENINGS, FLOOR FINISHES, PIPES etc.
7- THE CONTRACTOR SHALL BE RESPONSIBLE FOR THE EXECUTION OF DEWATERING SYSTEM WHERE SO REQUIRED DURING CONSTRUCTION.
8- TERMITE CONTROL TREATMENT SHALL BE CARRIED OUT AS PER SPECIFICATIONS.
9- DO NOT SCALE THE DRAWINGS. DIMENSIONS, GIVEN ON THE DRAWINGS, SHALL GOVERN.
10- ALL FABRICATION, PAINTING, ERECTION AND QUALITY CONTROL IS TO BE DONE IN ACCORDANCE WITH THE LATEST APPLICABLE ACI/AISC/BRITISH SPECIFICATIONS.
11- BACK FILLING AROUND FOUNDATIONS & WALLS SHALL BE DONE SIMULTANEOUSLY ON BOTH SIDES TO AVOID ANY LATERAL DISPLACEMENT. BACK FILLING UNDER FLOORS AND AROUND FOUNDATIONS SHALL BE DONE IN LAYERS NOT EXCEEDING 6 in. IN THICKNESS AND COMPACTED UPTO 95% MPD.
12- DEWATERING SHALL BE DONE BY CONTRACTOR IF REQUIRED WITH THE PRIOR APPROVAL OF THE ENGINEER.

2. FOUNDATIONS

1- FOUNDATIONS HAVE BEEN DESIGNED BASED ON NET ALLOWABLE BEARING CAPACITY AS SPECIFIED IN GEO-TECHNICAL INVESTIGATION REPORT.
2- IF SOFT/LOOSE POCKET OF SOIL IS ENCOUNTERED AT FOUNDATION BASE, IT SHOULD BE COMPLETELY REMOVED AND REPLACED WITH SELECT FILL MATERIAL. THE SELECT FILL SHOULD BE A-3 AS PER AASHTO SOIL CLASSIFICATIONS.THE SELECT FILL MATERIAL SHOULD BE REPLACED AND COMPACTED IN LAYERS OF THICKNESS APPROPRIATE TO TYPE AND SIZE OF COMPACTED EQUIPMENT TO AT LEAST 75% AT RELATIVE DENSITY.(95% MODIFIED PROCTOR DENSITY) AS APPROPRIATE. THE ON SITE SOIL AT FOUNDATION EXCAVATION BASE SHOULD BE PROOF ROLLED PRIOR TO THE PLACEMENT OF SELECT FILL.
3- ALL FOUNDATIONS SHALL BE PLACED ON COMPETENT LOAD BEARING STRATA. IF ACCEPTABLE BEARING STRATA IS NOT FOUND AT INDICATED DEPTHS OF FOUNDATION, THE ENGINEER SHALL BE NOTIFIED IN WRITING FOR HIS INSTRUCTIONS. ALL COLUMN FOOTING THAT MAY LIE IN THE FILL AREA SHOULD BE SUPPORTED ON THE NATURAL SOIL UNLESS OTHERWISE SHOWN ON THE DRAWINGS.
4- THE BED OF FOUNDATION SHALL BE THOROUGHLY COMPACTED PRIOR TO LAYING FOUNDATION. ANY LOOSE, WET, SOFT SOIL PATCH SHALL BE REPLACED WITH WELL-COMPACTED SELECTED GRANULAR FILL COMPACTED TO 95% MODIFIED AASHTO DENSITY.
5- THE FOUNDATION BED SOIL SHALL BE PROTECTED FROM INGRESS OF MOISTURE FROM ANY SOURCE BY PROVIDING ADEQUATE SURFACE DRAINAGE SYSTEM AND ENSURING LEAK PROOF JOINTING OF SEWERAGE AND WATER SUPPLY LINES. EXCESSIVE AND UNCONTROLLED WATERING FOR CURING AND COMPACTION OF BACK FILL MATERIAL SHALL BE AVOIDED.
6- ALL FOUNDATIONS SHALL BE PLACED ON COMPETENT LOAD BEARING STRATA. IF ACCEPTABLE BEARING STRATA IS NOT FOUND AT INDICATED DEPTHS OF FOUNDATION, THE ENGINEER SHALL BE NOTIFIED IN WRITING FOR HIS INSTRUCTIONS.
7- THE BED OF FOUNDATION SHALL BE THOROUGHLY COMPACTED PRIOR TO LAYING FOUNDATION. ANY LOOSE, WET, SOFT SOIL PATCH SHALL BE REPLACED WITH WELL-COMPACTED SELECT GRANULAR FILL COMPACTED TO 95% MODIFIED AASHTO DENSITY OR AS RECOMMENDED BY THE GEOTECHNICAL ENGINEER.

3. CONCRETE

3.1 STRENGTH

1- STRUCTURAL DESIGN IS BASED ON THE AMERICAN CONCRETE INSTITUTE CODE OF REINFORCED CONCRETE, ACI 318 AND UNIFORM BUILDING CODE.
2- ALL STRUCTURAL CONCRETE SHALL CONFORM TO AMERICAN CONCRETE INSTITUTE (ACI) REQUIREMENTS.
3- THE MINIMUM COMPRESSIVE CYLINDER STRENGTH AT 28 DAYS FOR VARIOUS STRUCTURES SHALL BE AS GIVEN IN THE FOLLOWING TABLE.

STRUCTURE/STRUCTURAL ELEMENT	MINIMUM COMPRESSIVE CYLINDER STRENGTH AT 28 DAYS (psi)
BLINDING CONCRETE/PLAIN CONCRETE	1500 (1:3:6)
SLABS , BEAMS & ALL OTHER STRUCTURAL ELEMENTS	2500 (1:2:4)
COLUMNS	3000 (1:1.5:3)
WATER RETAINING STRUCTURES	4000 (1:1:2)

3.2 MIX DESIGN

THE MIX DESIGN FOR THE SPECIFIED GRADES OF CONCRETE MEETING ALL REQUIREMENTS OF STRENGTH, WORKABILITY AND DURABILITY, SHALL BE CARRIED OUT BY THE CONTRACTOR AND SUBMITTED TO THE ENGINEER FOR HIS APPROVAL. CHEMICAL ADDITIVES SUCH AS RETARDERS/SUPER PLASTICIZERS MAY BE USED SUBJECT TO THE APPROVAL BY THE ENGINEER.

3.3 AGGREGATE SIZE

MAXIMUM AGGREGATE SIZE SHALL BE AS FOLLOWS UNLESS OTHERWISE APPROVED BY THE ENGINEER.

STRUCTURAL ELEMENT — MAX. AGGREGATE SIZE (inch)

FOUNDATION MATS, RAFTS AND FOOTINGS UP TO 3.0 FT. THICK. ..... 1½"
COLUMNS AND BEAMS ..... 3/4"
WALLS ..... 3/4"
SLABS ..... 3/4"

3.4 CONSTRUCTION JOINTS

1- GENERALLY, THE CONSTRUCTION JOINTS AS INDICATED ON THE DRAWINGS WILL BE FOLLOWED. HOWEVER THE CONTRACTOR MAY USE AN ALTERNATE CONSTRUCTION JOINTS ARRANGEMENT TO SUIT HIS REQUIREMENTS, WITH PRIOR APPROVAL OF THE ENGINEER. FOR THIS PURPOSE, THE CONTRACTOR SHALL SUBMIT HIS PROPOSAL FOR THE APPROVAL OF THE ENGINEER TWO WEEKS IN ADVANCE OF HIS SCHEDULED CONCRETE POURING DATE. ALL CONSTRUCTION JOINTS SHALL BE TREATED AS PER SPECIFICATIONS.
2- CONSTRUCTION JOINTS IN FLOOR SLABS AND BEAMS SHALL BE LOCATED AS SHOWN ON THE DRAWINGS OR AS APPROVED BY THE ENGINEER. HORIZONTAL CONSTRUCTION JOINTS IN RAFTS, SLABS AND BEAMS ARE NOT PERMITTED EXCEPT AS SPECIFICALLY INDICATED ON STRUCTURAL DRAWINGS.
3- SURFACE OF CONCRETE CONSTRUCTION JOINTS SHALL BE ROUGHENED, CLEANED AND LAITANCE REMOVED AS PER SPECIFICATIONS.
4- CONSTRUCTION JOINTS SHALL BE SO MADE AND LOCATED AS NOT TO IMPAIR THE STRENGTH OF THE STRUCTURE. THEY SHALL BE LOCATED AT THE ONE THIRD OF THE SPANS OF SLABS, BEAMS & JOISTS. IN WALLS & COLUMNS SHALL BE AT THE UNDER SIDE OF FLOORS, SLABS OR BEAMS AND AT THE TOP OF FOOTINGS OR FLOOR SLABS.
5- WATERSTOP SHALL BE PROVIDE AT CONSTRUCTION JOINTS WHERE REQUIRED WITH PRIOR APPROVAL OF THE ENGINEER.

3.5 EMBEDDED ITEMS

BEFORE PLACING CONCRETE, IT SHALL BE ENSURED THAT ALL EMBEDDED ITEMS ARE IN POSITION AND SECURELY FASTENED/WELDED IN PLACE ACCORDING TO THE DRAWINGS. EMBEDDED ITEMS SHALL BE FREE OF OIL AND OTHER FOREIGN MATTER SUCH AS LOOSE COATING OF RUST. ALL EMBEDDED ITEMS REQUIRED FOR DOORS AND WINDOWS SHALL BE SUPPLIED AND PLACED IN POSITION BY CIVIL CONTRACTOR. ALL EMBEDDED ITEMS REQUIRED FOR PIPING, ELECTRICAL AND MECHANICAL EQUIPMENTS SHALL BE SUPPLIED BY OTHERS. HOWEVER SUCH ITEMS SHALL BE PLACED AND HELD IN POSITION BY THE CIVIL CONTRACTOR BY HIS OWN SUPPORTING ARRANGEMENT APPROVED BY THE ENGINEER.

3.6 FINISHES

FINISHES OF CONCRETE SURFACES SHALL BE AS PER SPECIFICATIONS.

3.7 CONCRETE POURING

THE CONTRACTOR SHALL SUBMIT CONCRETE POURING SCHEDULE FOR ENGINEER'S APPROVAL. NO CONCRETE SHALL BE PLACED UNTIL WRITTEN PERMISSION IS GIVEN BY THE ENGINEER DURING CONSTRUCTION, STACKING OF CONSTRUCTION MATERIALS, BRICKS etc. SHALL BE AVOIDED ON SLAB PANELS.

4. REINFORCING STEEL

ALL REINFORCING STEEL SHALL BE DEFORMED BARS CONFORMING TO THE LATEST ASTM A615 GRADE 60 HAVING A MINIMUM YIELD STRENGTH OF 60,000 PSI.

4.1 CONCRETE PROTECTION TO REINFORCEMENT

MINIMUM CLEAR CONCRETE COVER TO REINFORCEMENT SHALL BE AS FOLLOWS, UNLESS OTHERWISE SPECIFIED ON THE DRAWINGS.

STRUCTURAL ELEMENT — COVER (inch)

1- FOUNDATION IN CONTACT WITH SOIL & WATER ..... 3"
FOUNDATIONS NOT IN CONTACT WITH SOIL ..... 2"
2- WALLS (INCLUDING RETAINING WALLS)
FACE EXPOSED TO WEATHER OR EARTH ..... 2"
FACE NOT EXPOSED TO WEATHER OR EARTH ..... 1½"
FACE EXPOSED TO WATER ..... 3"
3- SLABS ..... 3/4"
4- COLUMNS AND BEAMS ..... 1½"

4.2 DETAILING OF REINFORCEMENT

ADDITIONAL BARS EQUAL TO 1/2 REINFORCING BARS AREA, INTERRUPTED BY OPENING, SHALL BE PROVIDED AT EACH SIDE OF OPENING AND SHALL EXTEND EQUAL TO SPLICE LENGTH (3'-0" MIN.) BEYOND OPENING. MIN. 2-#5 BARS ON EACH SIDE AND FACE SHALL BE USED. FOR OPENINGS LESS THAN 12"X12", OFFSET THE REINFORCEMENT TO CLEAR OPENING AND NO ADDITIONAL REINFORCEMENT SHALL BE PROVIDED.

A. ACCESSORIES

BAR SUPPORTS, SPACERS AND OTHER ACCESSORIES ARE NOT SHOWN ON THE DRAWINGS. THE RECOMMENDATIONS OF ACI-315 OR OTHER SUPPORTING SYSTEM AS APPROVED BY THE ENGINEER MAY BE USED.

B. STANDARD REINFORCEMENT DETAILS

a) MINIMUM BEND DIAMETERS

THE BEND DETAILS SHALL BE AS SHOWN IN THE TABLE AND FIGURES BELOW.

TABLE (1) – MINIMUM DIAMETER OF BEND

BAR SIZE	MINIMUM DIAMETER OF BEND
#3 Through #5	$4D_b$
#6 Through #8	$6D_b$
#9, #10 and #11	$8D_b$

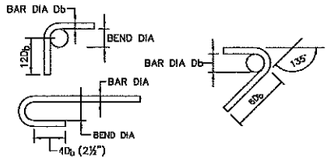

STANDARD HOOKS FOR REINFORCEMENT OTHER THAN STIRRUPS, TIES & HOOPS — STANDARD HOOKS FOR STIRRUPS TIES AND HOOPS

b) DEVELOPMENT LENGTH

UNLESS NOTED OTHERWISE ON THE DRAWINGS, MINIMUM BASIC DEVELOPMENT LENGTH FOR Fy = 60000 PSI (GRADE 60) SHALL BE AS FOLLOWS:

(a) TOP BARS

fc' (psi) \ Bar Size	DEVELOPMENT LENGTH 'inch' (Fy=60000 psi)								
	#3	#4	#5	#6	#7	#8	#9	#10	#11
3000 (1:1.5:3)	21	30	36	42	63	72	81	90	99
4000 (1:1:2)	18	24	33	36	54	63	69	78	84

(b) BOTTOM BARS

fc' (psi) \ Bar Size	DEVELOPMENT LENGTH 'inch' (Fy=60000 psi)								
	#3	#4	#5	#6	#7	#8	#9	#10	#11
3000 (1:1.5:3)	18	21	27	33	48	54	63	59	75
4000 (1:1:2)	15	18	24	30	42	48	54	60	66

c) SPLICE/LAP LENGTH

1- WELDED WIRE FABRIC MESH SHALL BE LAPPED OVER ADJACENT SHEET BY 12 INCH.
2- BARS SHALL BE SPLICED ONLY WHERE INDICATED, OR AT LOCATIONS SPECIFICALLY APPROVED BY THE ENGINEER.
3- THE LAPS SHOULD BE STAGGERED.
4- UNLESS OTHERWISE STATED ON THE DRAWINGS THE FOLLOWING LAP LENGTHS SHALL BE PROVIDED.

(a) TOP BARS

fc' (psi) \ Bar Size	SPLICE/LAP LENGTH 'inch' (Fy=60000 psi)								
	#3	#4	#5	#6	#7	#8	#9	#10	#11
3000 (1:1.5:3)	27	39	48	54	81	93	105	114	129
4000 (1:1:2)	24	33	42	48	72	81	90	102	111

(b) BOTTOM BARS

fc' (psi) \ Bar Size	SPLICE/LAP LENGTH 'inch' (Fy=60000 psi)								
	#3	#4	#5	#6	#7	#8	#9	#10	#11
3000 (1:1.5:3)	21	27	36	42	63	72	81	90	99
4000 (1:1:2)	18	24	30	36	54	63	72	78	84

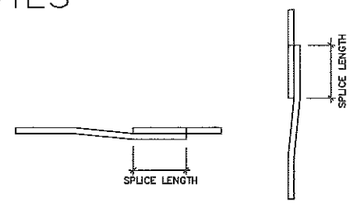

BEAM SPLICE (TYP.) COLUMN SPLICE (TYP.)

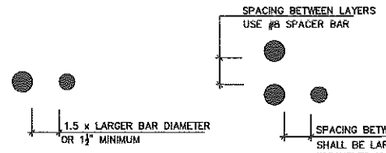

VERTICAL BAR SPACING IN COLUMNS — BAR SPACING IN BEAM

4.3 ALL REINFORCING STEEL SHALL BE ACCURATELY LOCATED IN THE FORMS AND HELD FIRMLY IN PLACE BEFORE & DURING THE PLACEMENT OF CONCRETE, BY MEANS OF WIRE AND SUPPORTS ADEQUATE TO PREVENT DISPLACEMENT DURING THE COURSE OF CONSTRUCTION.
4.4 DISTRIBUTION REINFORCEMENT SHALL BE PROVIDED AS #3@10"c/c UNLESS OTHERWISE SPECIFIED.

5. FORMWORK

1- THE DESIGN AND ENGINEERING OF THE FORMWORK, AS WELL AS ITS CONSTRUCTION IS THE REASONABILITY OF THE CONTRACTOR. THE FORMWORK SHALL BE DESIGNED CONFORMING TO THE REQUIREMENTS OF ACI 301 AND CONTRACT SPECIFICATIONS.
2- THE FORMWORK SHALL HAVE SUFFICIENT STRENGTH TO WITHSTAND THE PRESSURE RESULTING FROM PLACEMENT AND VIBRATION OF CONCRETE AND SHALL HAVE SUFFICIENT RIGIDNESS TO MAINTAIN THE TOLERANCE SPECIFIED IN ACI 301 AND CONTRACT SPECIFICATIONS.

6. SHOP DRAWINGS

1- SHOP DRAWINGS FOR FORMWORK, CONCRETE AND REINFORCEMENT SHOWING ALL FABRICATION DIMENSIONS AND LOCATION SHALL BE PREPARED BY THE CONTRACTOR AND SUBMITTED FOR THE ENGINEER'S APPROVAL.
2- THE CONTRACTOR SHALL ALSO PREPARE BAR BENDING SCHEDULES AND SUBMIT THESE FOR APPROVAL OF THE ENGINEER.
3- IT WILL BE PREFERABLE THAT CUTTING AND BENDING OF REINFORCING STEEL BE CARRIED OUT IN WORKSHOP WITH CUTTING BENDING MACHINE.

7. SHORING AND BRACING

1- SHORE & BRACE ALL PARTS OF THE BUILDING DURING CONSTRUCTION, TO THE EXTENT NECESSARY TO ENSURE COMPLETE SAFETY, STRENGTH & SERVICEABILITY OF ALL STRUCTURAL ELEMENTS UNDER ALL CONDITIONS OF LOADS, WHICH MAY OCCUR DURING CONSTRUCTION. SUCH SHORING & BRACING IS THE CONTRACTOR'S SOLE RESPONSIBILITY AND IS NOT SHOWN ON STRUCTURAL DRAWINGS OR SPECIFIED IN THE PROJECT SPECIFICATIONS.
2- THE CONTRACTOR SHALL BE RESPONSIBLE FOR THE SAFETY AND STABILITY OF THE ADJACENT EXISTING STRUCTURES AND SHALL PROVIDE SHORING AND BRACING DURING EXCAVATION AND CONSTRUCTION, WHEREVER AND WHENEVER REQUIRED TO THE SATISFACTION OF THE ENGINEER.

8. BRICK WORK

1- ALL BRICK WORK SHALL CONFORM TO SPECIFICATIONS GIVEN IN THE CONTRACT DOCUMENT.
2- ALL BRICKS SHALL BE SOUND, HARD, WELL BURNT AND OF UNIFORM SIZE, COLOUR AND TEXTURE. DIMENSIONAL VARIATION IN SIZES SHALL NOT EXCEED 1/8".
3- ALL BRICK WORK SHALL BE ERECTED PLUMB AND TRUE TO LINE AND LEVEL. THE MAXIMUM VARIATION IN ANY STOREY HEIGHT OR ANY LENGTH OF WALL SHALL BE 1/8" IN 10', OR AS SPECIFIED IN THE CONTRACT SPECIFICATIONS.
4- MORTAR USED IN MASONRY CONSTRUCTION SHALL HAVE AN ULTIMATE COMPRESSIVE STRENGTH OF NOT LESS THAN 1800 Psi AND SHALL CONFORM TO ASTM C270. COMPRESSIVE STRENGTH OF MASONRY AT 28 DAYS SHALL NOT BE LESS THAN 1150 Psi.
5- ALL DESIGN, DETAILING, MATERIAL AND WORKMANSHIP SHALL BE IN ACCORDANCE WITH RELEVANT ACI, ASTM, AND UBC CODE AND STANDARDS. TESTING OF COMPRESSIVE STRENGTH OF MASONRY SHALL BE DONE, IF SO DIRECTED
6- BY THE ENGINEER, IN ACCORDANCE WITH ASTM C67 OR PAKISTAN STANDARD-208.
7- THE AVERAGE COMPRESSIVE STRENGTH OF TWELVE HALF BRICKS SHALL BE NOT LESS THAN 2000 psi AND SHALL BE NOT LESS THAN 1800 psi FOR ANY INDIVIDUAL BRICK.
8- BRICK SHALL BE LAID "FROG" UPWARD WITH MORTAR JOINT AND IN ENGLISH AND FLEMISH BOND OR AS DIRECTED BY THE ENGINEER.
9- TESTING OF COMPRESSIVE STRENGTH OF MASONRY SHALL BE DONE, IF SO DIRECTED BY THE ENGINEER, IN ACCORDANCE WITH ASTM C67 OR PAKISTAN STANDARD-208.

9. TOLERANCES AND DIMENSIONS

BEFORE THE FORMWORK IS LAID AT SITE THE CONTRACTOR MUST VERIFY AND CHECK OVERALL DIMENSIONS/ELEVATIONS OF THE STRUCTURE GIVEN IN THE STRUCTURAL DRAWINGS TO SEE IF THE FINISHED DIMENSIONS/ELEVATIONS GIVEN ON THE DRAWINGS TALLY AFTER PROVIDING THE REQUIRED FINISH. THE ENGINEER'S REPRESENTATIVE SHALL VERIFY THE MEASUREMENTS OF STRUCTURAL SIZE AND ELEVATIONS TO BE RECORDED IN THE RELEVANT POUR STEPS. PERMISSION TO PROCEED SHALL NOT BE GRANTED IF DEVIATIONS ARE MORE THAN PERMISSIBLE TOLERANCES, AS STIPULATED IN THE SPECIFICATIONS.

10. LOCAL ADJUSTMENTS

LOCAL ADJUSTMENTS TO ACCOMMODATE FIXTURES/EMBEDMENTS/OPENINGS MAY BE MADE AT SITE, SUBJECT TO THE APPROVAL OF THE ENGINEER, AS LONG AS IT DOES NOT MATERIALLY AFFECT THE DESIGN.

11. STRUCTURAL STEEL

1- ALL STRUCTURAL STEEL SECTIONS SHALL CONFORM TO ASTM A36M OR EQUIVALENT WITH MINIMUM YIELD STRENGTH OF 248 MPa (36,000 psi). ALL ANCHORS, BOLTS, NUTS AND WASHERS SHALL CONFORM TO ASTM A325M. ALL STEEL PLATES, TUBES AND BUILT-UP SECTIONS SHALL CONFORM TO HR 235.
2- ALL WELDS SHALL CONFORM TO THE APPLICABLE PROVISIONS OF A.W.S (AMERICAN WELDING SOCIETY) CODE. ALL WELDING ELECTRODES SHALL CONFORM TO E 70XX.
3- MINIMUM SIZE OF FILLET WELD SHALL BE 7mm EXCEPT OTHERWISE NOTED.
4- ALL STRUCTURAL STEEL SECTIONS SHALL BE GIVEN TWO COATS OF REDOXIDE PAINT. ALL EXPOSED STEEL SURFACES SHALL BE PAINTED WITH APPROVED PAINT AND COLOUR AS DIRECTED BY THE ENGINEER.
5- THE BASE PLATES OF THE COLUMNS SHALL BE LEVELED AND THEN GROUTED WITH APPROVED NON-SHRINK GROUT USING STANDARD APPROVED PROCEDURE.
6- ALL ANCHOR BOLTS SHALL BE HOT DIPPED GALVANIZED.
7- NUTS AND BOLTS FOR CLAMPS SHALL BE SPOT WELDED AFTER TIGHTENING.

TABLE FOR LINTEL REINFORCEMENT

OPENING WIDTH	DEPTH	BOTTOM	TOP	STIRRUPS
3'-0" TO 4'-0"	6"	2#4	2#3	#3@6"
4'-1" TO 6'-0"	9"	3#4	3#3	#3@6"
6'-1" TO 10'-0"	9"	2#6	2#4	#3@5"

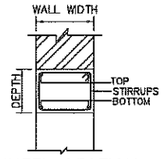

LINTEL SECTION

12- REINFORCEMENT DETAIL AT OPENING IN SLAB/SLEEVES.

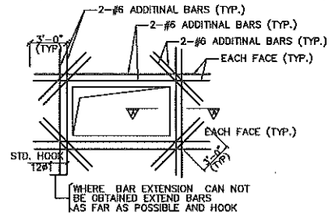

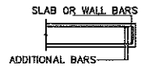

SECTION A-A

NOTES
- FOR OPENING WITH MAXIMUM DIMENSION OVER 5'-0" REFER TO OTHER DETAILS.
- USE THESE DETAILS IF NOT SHOWN IN DESIGN DRAWINGS.

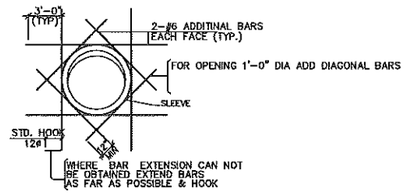

13. SLAB CURTAILMENT PLAN & CORNER REINFORCEMENT END

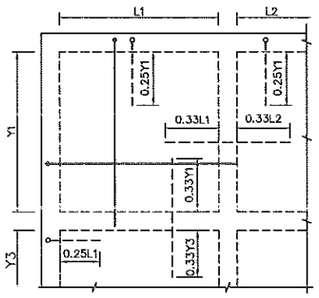

TYPICAL SLAB REINFORCEMENT (CUT OFF POINTS)

NOTE. TOP REINFORCEMENT OF SLAB AT CONTINUOUS EDGE SHALL BE GREATER OF THE ADJACENT SPAN.

TENDER DRAWING

NOT TO BE USED FOR CONSTRUCTION FOR TENDER PURPOSE ONLY

REFERENCE DRAWINGS	REV.NO.	DATE	DESCRIPTION	BY	CKD	APPR

PROGRAM MANAGEMENT UNIT, PUNJAB INTERMEDIATE CITIES IMPROVEMENT INVESTMENT PROGRAM (PICIIP), LOCAL GOVERNMENT AND COMMUNITY DEVELOPMENT (LG & CD) DEPARTMENT, PUNJAB)

CONSULTING SERVICES FOR ENGINEERING, PROCUREMENT AND CONSTRUCTION MANAGEMENT (EPCM) CONSULTANT.

COVERED PARKING SHEDS AT FREED TOWN, SAHIWAL
GENERAL NOTES

NESPAK

DESN. NESPAK	RECOMMENDED	VER./CKD.	APPROVED
DWN. GHULAM M.			
FILE	DATE AUG. 2020	DRAWING NO. 3976/033/TD/G001	REV. 0
CKD.			
SUBM.			

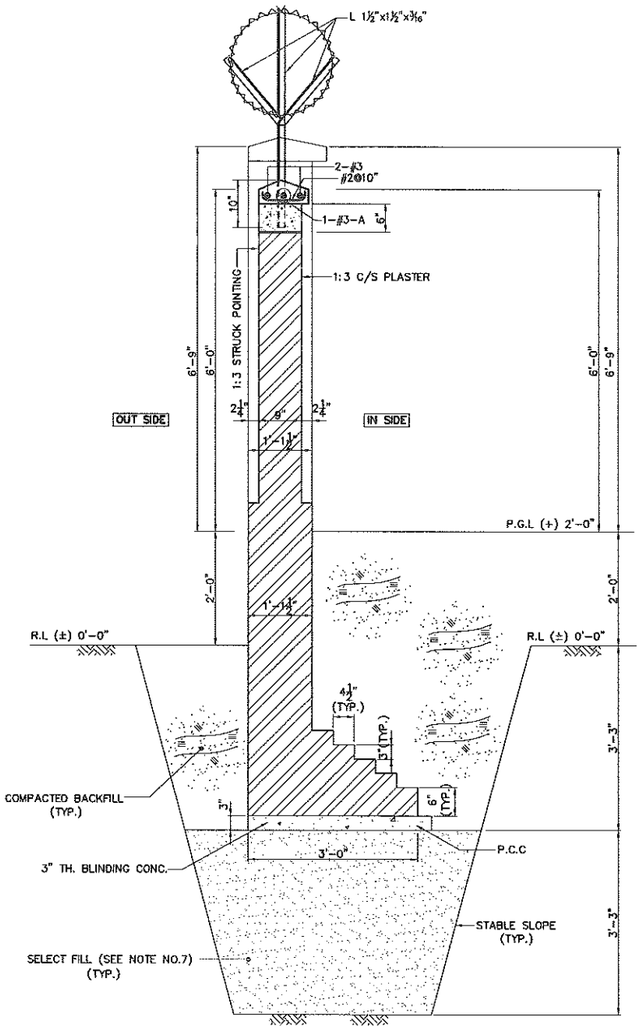

SECTION 1–1
SCALE 3/4"=1'-0"

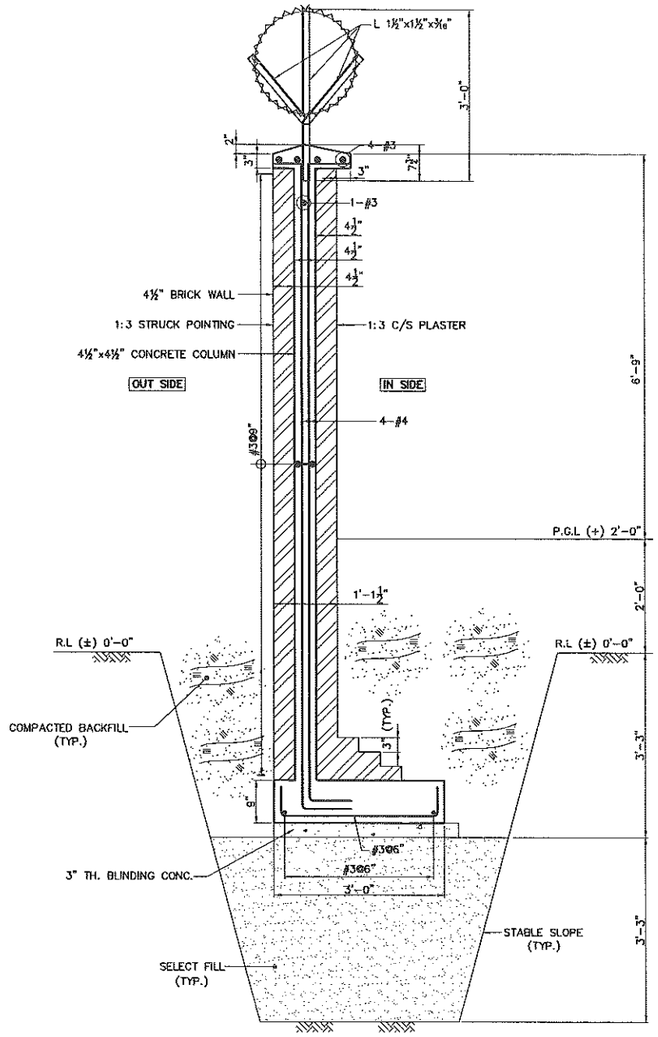

SECTION 2–2
SCALE 3/4"=1'-0"

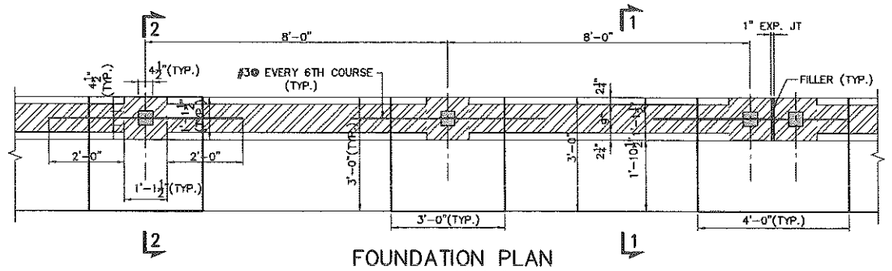

FOUNDATION PLAN
SCALE 1/2"=1'-0"

NOTES:

1. ALL DIMENSIONS ARE IN FEET AND INCHES UNLESS OTHERWISE NOTED.
2. FOR GENERAL NOTES REFER DRAWING NO. 3976/033/TD/G001.
3. BACK FILLING AROUND FOUNDATIONS & WALLS SHALL BE CARRIED OUT SIMULTANEOUSLY ON BOTH SIDES TO AVOID ANY LATERAL DISPLACEMENT. BACK FILLING UNDER FLOORS AND AROUND FOUNDATIONS SHALL BE DONE IN LAYERS NOT EXCEEDING 6 in.
4. THE AREA AROUND THE WALL SHALL BE PROPERLY DRAINED DURING AND AFTER CONSTRUCTION OF THE BOUNDARY WALL.
5. MORTAR USED IN MASONRY CONSTRUCTION (1:3) SHALL HAVE AN ULTIMATE COMPRESSIVE STRENGTH OF NOT LESS THAN 1800 Psi AND SHALL CONFORM TO ASTM C270,COMPRESSIVE STRENGTH OF MASONRY AT 28 DAYS SHALL NOT BE LESS THAN 1150 Psi.
6. EXPANSION JOINT IN BOUNDARY WALLS SHALL BE FURNISHED AFTER EVERY 10 PANELS INTERVAL IN STRAIGHT WALL.
7. THE SELECT FILL SHOULD BE A–3 AS PER AASHTO SOIL CLASSIFICATIONS.THE SELECT FILL MATERIAL SHOULD BE REPLACED AND COMPACTED IN LAYERS OF THICKNESS APPROPRIATE TO TYPE AND SIZE OF COMPACTED EQUIPMENT TO AT LEAST 75% AT RELATIVE DENSITY OR 95% MODIFIED PROCTOR DRY DENSITY, AS APPROPRIATE. THE ON SITE SOIL AT FOUNDATION EXCAVATION BASE SHOULD BE PROOF ROLLED PRIOR TO THE PLACEMENT OF SELECT FILL/FOUNDATION.

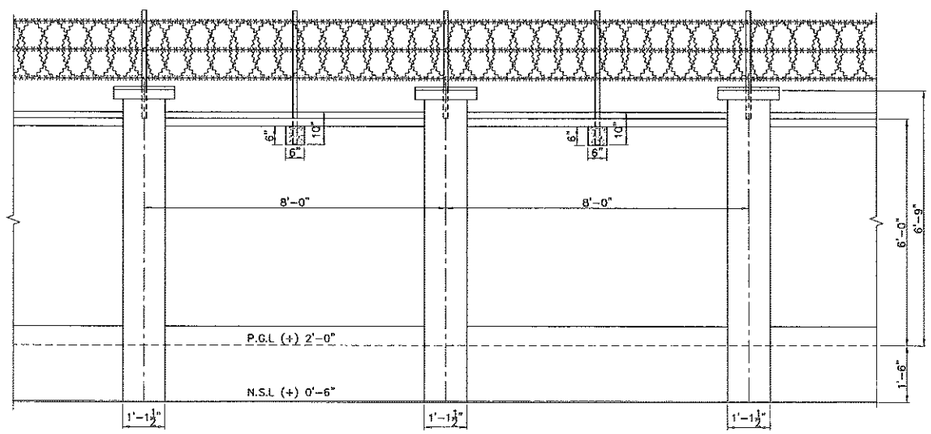

TYPICAL WALL ELEVATION
SCALE 1/2"=1'-0"

NOT TO BE USED FOR CONSTRUCTION
FOR TENDER PURPOSE ONLY

SCALE 0 1 2 3 4 5 FEET
SCALE 3/8"=1'-0"
UNLESS OTHERWISE NOTED

PROGRAM MANAGEMENT UNIT, PUNJAB INTERMEDIATE CITIES IMPROVEMENT INVESTMENT PROGRAM (PICIIP), LOCAL GOVERNMENT AND COMMUNITY DEVELOPMENT (LG & CD) DEPARTMENT, PUNJAB)

CONSULTING SERVICES FOR ENGINEERING, PROCUREMENT AND CONSTRUCTION MANAGEMENT (EPCM) CONSULTANT

COVERED PARKING SHED AT FREED TOWN, SAHIWAL
BOUNDARY WALL (FOUNDATION & SECTIONS)

NESPAK

REFERENCE DRAWINGS	REV.NO	DATE	DESCRIPTION	BY	CKD	APPR

DESN. NESPAK	RECOMMENDED	VER./CKD.	APPROVED
DWN. M.ASIM/TARIQ			
FILE	DATE	DRAWING NO.	REV.
CKD.	AUG. 2020	3976/033/TD/3G01	0
SUBM.			

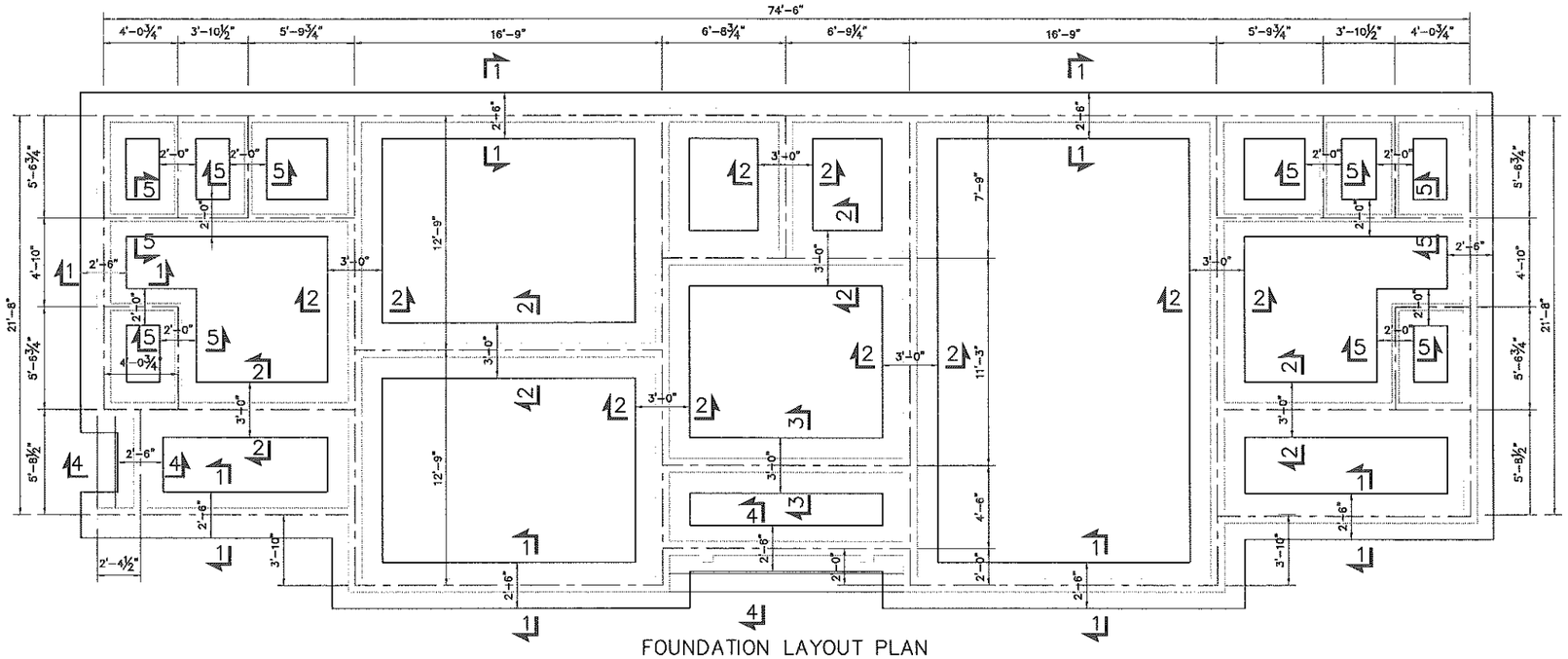

FOUNDATION LAYOUT PLAN

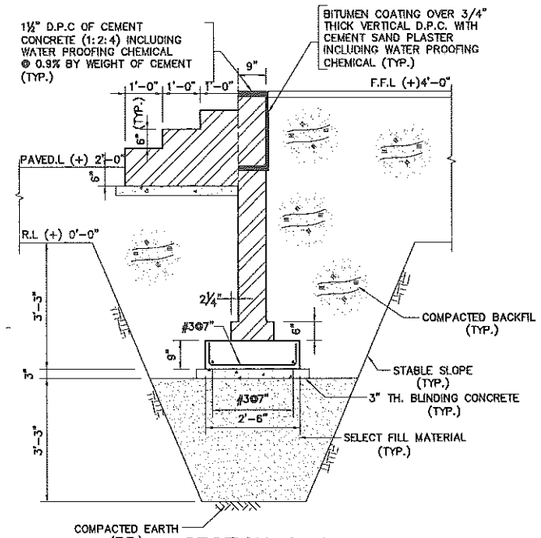

SECTION 4–4
SCALE 1/2":1'-0"

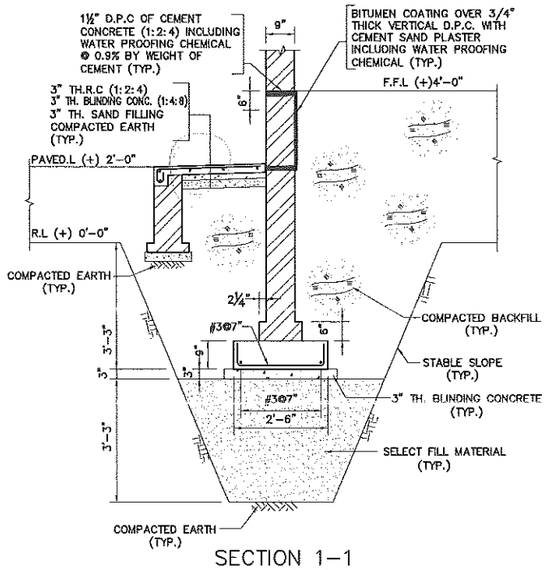

SECTION 1–1
SCALE 1/2":1'-0"

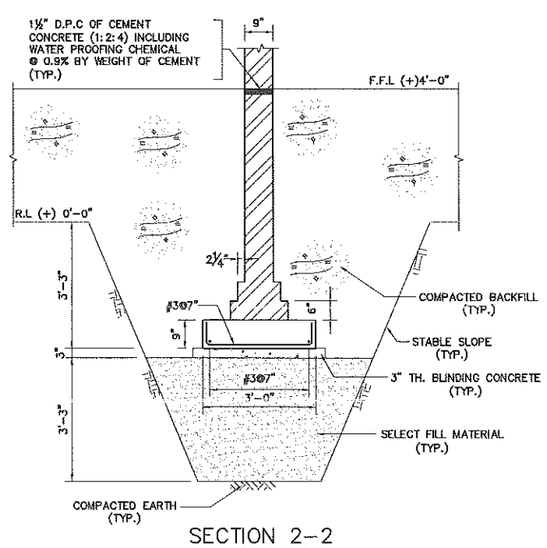

SECTION 2–2
SCALE 1/2":1'-0"

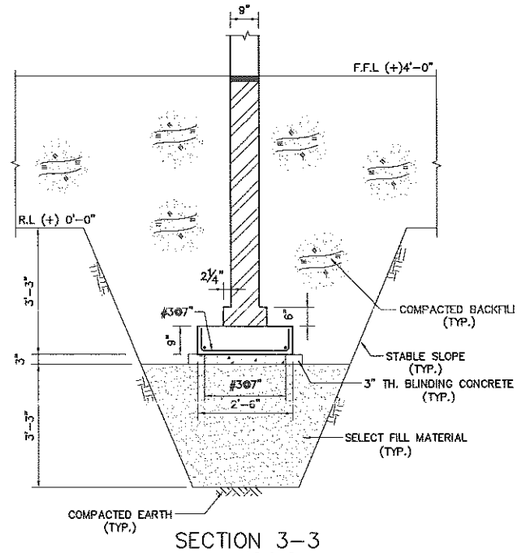

SECTION 3–3
SCALE 1/2":1'-0"

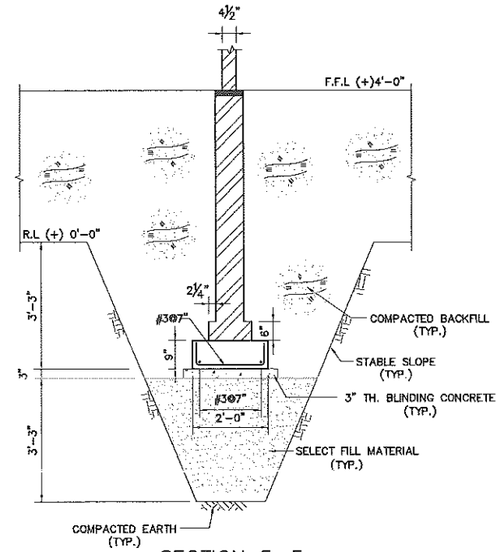

SECTION 5–5
SCALE 1/2":1'-0"

SCALE 0 5 10 FEET
SCALE 3/16"=1'-0"
UNLESS OTHERWISE NOTED

NOTE

1. FOR GENERAL NOTES PREFER DWG. 3976/033/C/G001

TENDER DRAWING

NOT TO BE USED FOR CONSTRUCTION
FOR ESTIMATION PURPOSE ONLY

REFERENCE DRAWINGS	REV NO.	DATE	DESCRIPTION	BY	CKD.	APPR.

PROGRAM MANAGEMENT UNIT, PUNJAB INTERMEDIATE CITIES IMPROVEMENT INVESTMENT PROGRAM (PICIIP), LOCAL GOVERNMENT AND COMMUNITY DEVELOPMENT (LG & CD) DEPARTMENT, PUNJAB)

CONSULTING SERVICES FOR ENGINEERING, PROCUREMENT AND CONSTRUCTION MANAGEMENT (EPCM) CONSULTANT.

COVERED PARKING SHEDS AT FREED TOWN, SAHIWAL
OFFICE BUILDING-FOUNDATION
PLAN & SECTIONS (CONCRETE OUTLINE & REINFORCEMENT)

NESPAK

DESN. NESPAK	RECOMMENDED	VER./CKD.	APPROVED
DWN. SAEED			
FILE	DATE	DRAWING NO.	REV.
CKD.	AUG, 2020	3976/033/TD/2G01	0
SUBM.			

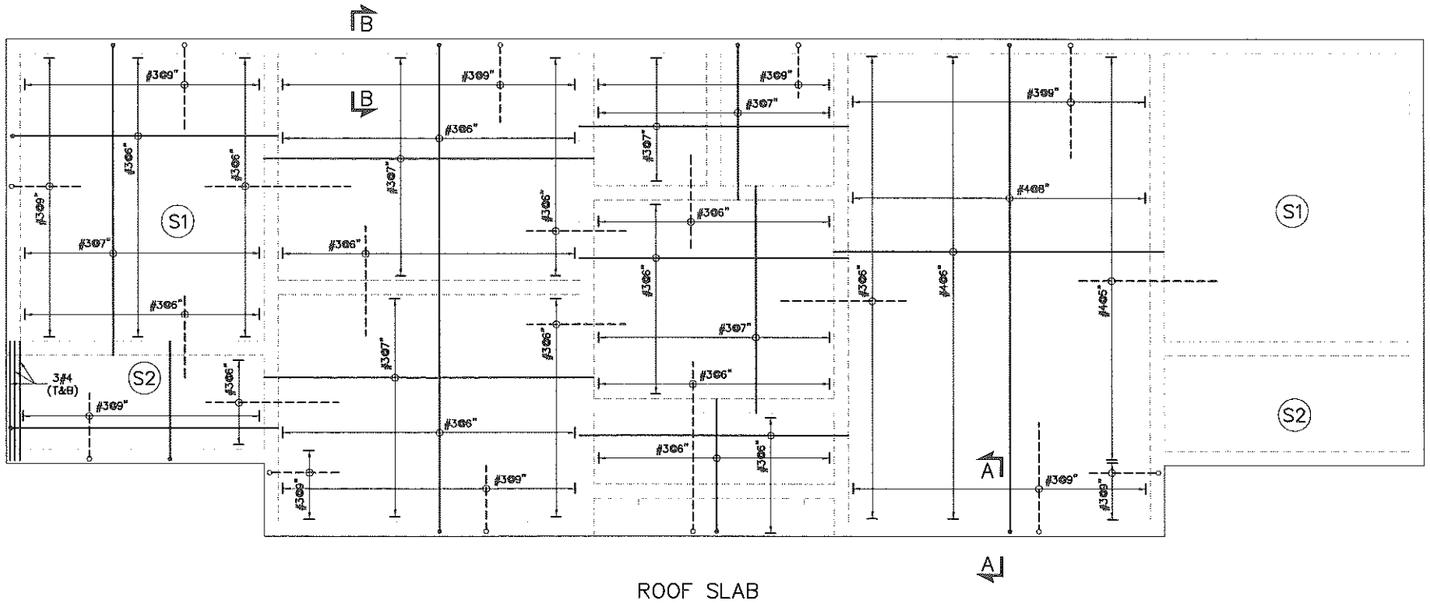

ROOF SLAB
(SLAB THICKNESS 5" UNLESS OTHERWISE NOTED)

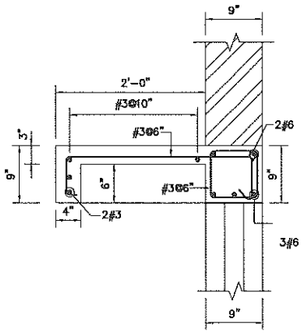

SECTION A–A
SCALE: 1"=1'-0"

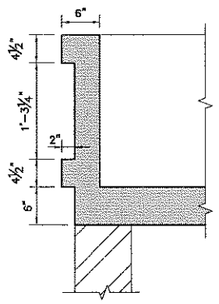

SECTION B–B
(CONCRETE OUTLINE)
SCALE: 1"=1'-0"

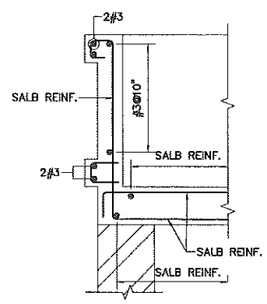

SECTION B–B
(REINFORCEMENT)
SCALE: 1"=1'-0"

TENDER DRAWING

NOT TO BE USED FOR CONSTRUCTION
FOR ESTIMATION PURPOSE ONLY

NOTES:

1. FOR GENERAL NOTES REFER DRAWING NO. 3976/033/C/G001.

SCALE 0 1 2 3 4 5 FEET

SCALE 3/8"=1'-0"
UNLESS OTHERWISE NOTED

PROGRAM MANAGEMENT UNIT, PUNJAB INTERMEDIATE CITIES IMPROVEMENT INVESTMENT PROGRAM (PICIIP), LOCAL GOVERNMENT AND COMMUNITY DEVELOPMENT (LG & CD) DEPARTMENT, PUNJAB)

REHABILITATION / IMPROVEMENT OF SEWERAGE SYSTEM, IN NORTH ZONE , SAHIWAL

COVERED PARKING SHEDS AT FREED TOWN, SAHIWAL
OFFICE BUILDING- ROOF SLAB
PLAN & SECTIONS (CONCRETE OUTLINE & REINFORCEMENT)

NESPAK

DESN. NESPAK	RECOMMENDED	VER./CKD.	APPROVED
DWN. SAEED			
FILE	DATE	DRAWING NO.	REV.
CKD.	AUG, 2020	3976/033/TD/2G02	0
SUBM.			

REFERENCE DRAWINGS	REV.NO.	DATE	DESCRIPTION	BY	CKD	APPR

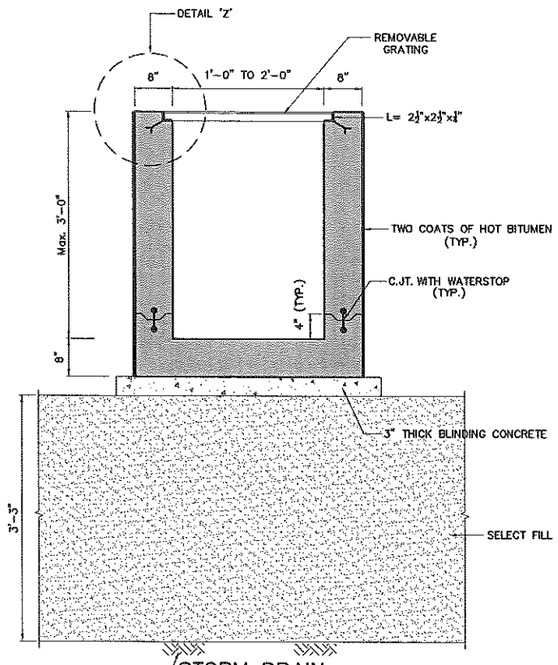

STORM DRAIN
(CONCRETE OUTLINE)
SCALE 1"=1'-0"

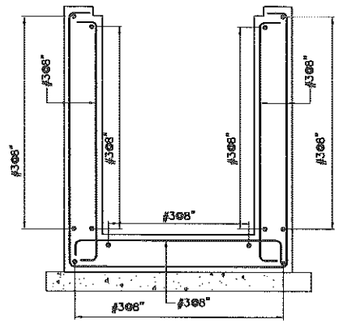

STORM DRAIN
(REINFORCEMENT)
SCALE 1"=1'-0"

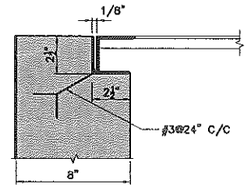

DETAIL 'Z'
SCALE 3"=1'-0"

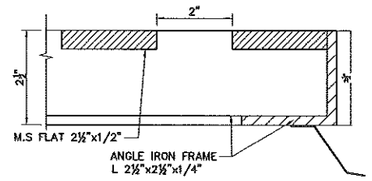

SECTION A–A
SCALE 6"=1'-0"

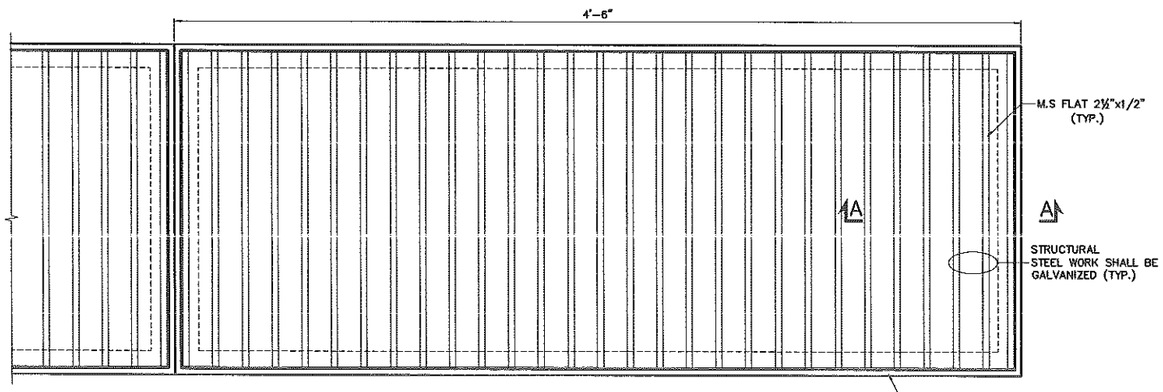

TYPICAL GRATING DETAIL
SCALE 3"=1'-0"

NOTES

1. ALL DIMENSIONS AND ELEVATIONS ARE IN FEET & INCHES.
2. READ THIS DRAWING IN CONJUNCTION WITH ALL OTHER RELEVANT DRAWINGS.
3. REINFORCED CONCRETE SHALL HAVE A MINIMUM COMPRESSIVE CYLINDER STRENGTH OF 3000 Psi AT 28 DAYS UNLESS OTHERWISE NOTED.
4. BLINDING CONCRETE / PCC SHALL HAVE A MINIMUM COMPRESSIVE CYLINDER STRENGTH OF 1500 Psi AT 28 DAYS.
5. ALL REINFORCEMENT SHALL BE DEFORMED BARS CONFORMING TO ASTM A 615 GRADE 60 HAVING A MINIMUM YIELD STRENGTH OF 60,000 Psi.
6. THE FOLLOWING MINIMUM CLEAR CONCRETE COVER TO REINFORCEMENT SHALL BE PROVIDED, UNLESS OTHERWISE SPECIFIED ON THE DRAWING.

STRUCTURAL ELEMENT		COVER (IN)
(i)	BASE SLAB	1"
(ii)	WALL	1"

7. THE ONSITE SOIL AT FOUNDATION EXCAVATION BASE SHOULD BE PROOF ROLLED PRIOR TO THE PLACEMENT OF SELECT FILL / FOUNDATION.
8. OPEN AREAS ADJACENT TO FOUNDATIONS MUST BE PROTECTED AGAINST PENETRATION OF SURFACE WATER, WHICH SHOULD BE DRAINED AWAY FROM THE CONSTRUCTED AREAS.
9. THE CONTRACTOR SHALL PREPARE BAR BENDING SCHEDULES AND SUBMIT THESE FOR APPROVAL OF THE ENGINEER.
10. BACKFILLING AROUND THE FOUNDATIONS SHOULD BE CARRIED OUT SIMULTANEOUSLY ON BOTH SIDES OF THE WALL/FOUNDATIONS.
11. BACKFILLING AROUND FOUNDATIONS SHALL BE WELL COMPACTED (95%MPD) AND SHALL BE DONE IN LAYERS NOT EXCEEDING 8 INCHES IN THICKNESS.
12. ALL STRUCTURAL STEEL SECTIONS SHALL CONFORM TO ASTM A36M OR EQUIVALENT WITH MINIMUM YIELD STRENGTH OF 248 MPa (36,000 psi). ALL ANCHORS, BOLTS, NUTS AND WASHERS SHALL CONFORM TO ASTM A325M. ALL STEEL PLATES, TUBES AND BUILT-UP SECTIONS SHALL CONFORM TO HR 235.
13. ALL WELDS SHALL CONFORM TO THE APPLICABLE PROVISIONS OF A.W.S (AMERICAN WELDING SOCIETY) CODE. ALL WELDING ELECTRODES SHALL CONFORM TO E 70XX.
14. MINIMUM SIZE OF FILLET WELD SHALL BE 6mm EXCEPT OTHERWISE NOTED.

TENDER DRAWING

NOT TO BE USED FOR CONSTRUCTION
FOR TENDER PURPOSE ONLY

INCHES 0 1 2 3 4 FEET
SCALE: 3/8"=1'-0"
UNLESS OTHERWISE NOTED

PROGRAM MANAGEMENT UNIT, PUNJAB INTERMEDIATE CITIES IMPROVEMENT INVESTMENT PROGRAM (PICIIP), LOCAL GOVERNMENT AND COMMUNITY DEVELOPMENT (LG & CD) DEPARTMENT, PUNJAB)

CONSULTING SERVICES FOR ENGINEERING, PROCUREMENT AND CONSTRUCTION MANAGEMENT (EPCM) CONSULTANT.

COVERED PARKING SHEDS AT FREED TOWN, SAHIWAL
STORM DRAIN
CONCRETE OUTLINE & REINFORCEMENT

NESPAK

REFERENCE DRAWINGS	REV. NO.	DATE	DESCRIPTION	BY	CKD.	APPR.

DESN. NESPAK	RECOMMENDED	VER./CKD.	APPROVED
DWN. M.ASIM			
CKD.	DATE	DRAWING NO.	REV.
SUBM.	SEP. 2020	3976/033/TD/1G01	0

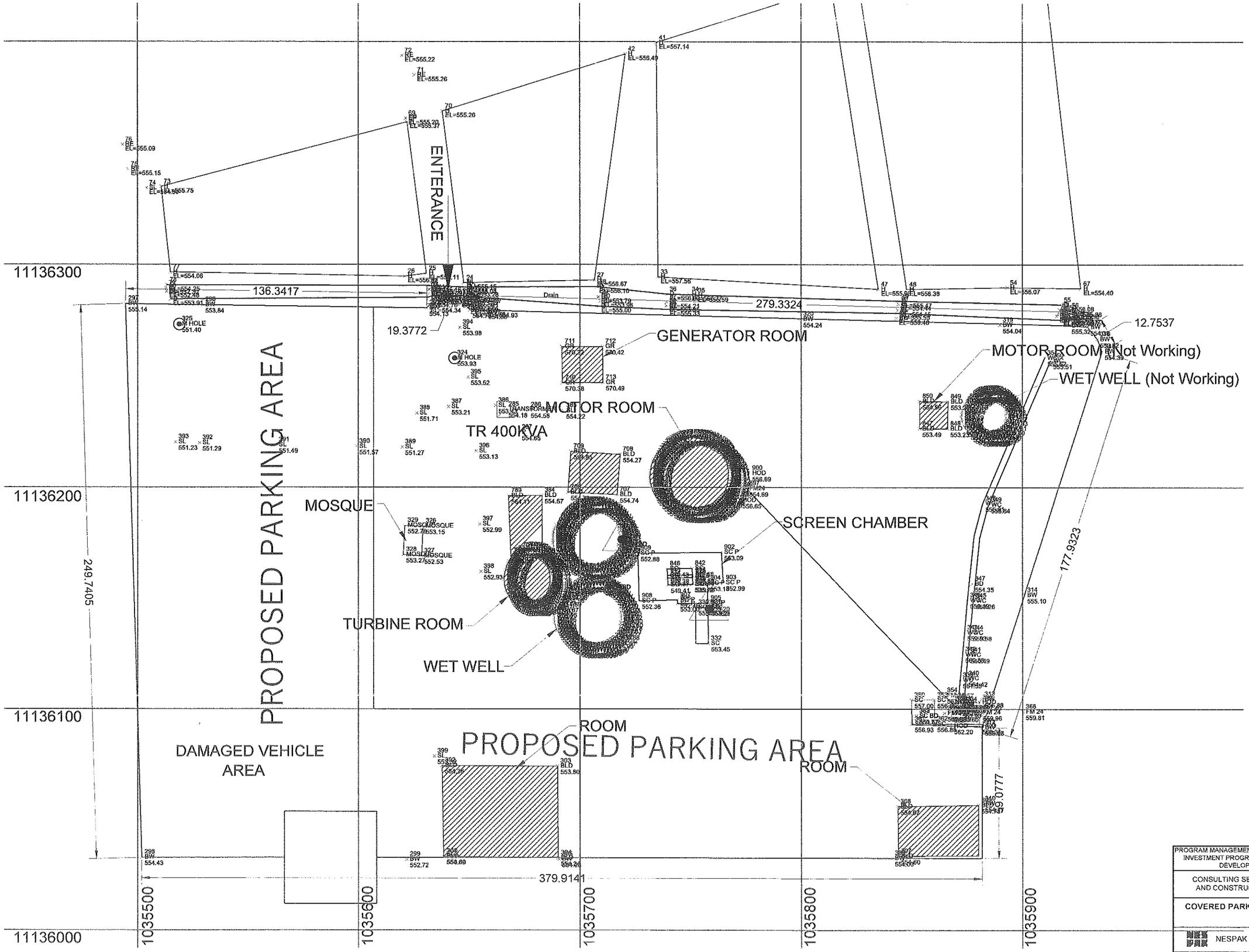

PROGRAM MANAGEMENT UNIT, PUNJAB INTERMEDIATE CITIES IMPROVEMENT INVESTMENT PROGRAM (PICIIP), LOCAL GOVERNMENT AND COMMUNITY DEVELOPMENT (LG & CD) DEPARTMENT, PUNJAB)

CONSULTING SERVICES FOR ENGINEERING, PROCUREMENT AND CONSTRUCTION MANAGEMENT (EPCM) CONSULTANT.

COVERED PARKING SHEDS AT FREED TOWN, SAHIWAL

TOPOGRAPHIC SURVEY

NESPAK

DESN. NESPAK	RECOMMENDED	VER./CKD.	APPROVED
DWN. dilsher			
FILE			
CKD.			
SUBM.	DATE JULY. 2020	DRAWING NO. 3976/311/TD/B01a	REV. 0

REFERENCE DRAWINGS	REV. NO.	DATE	DESCRIPTION	BY	CKD	APPR

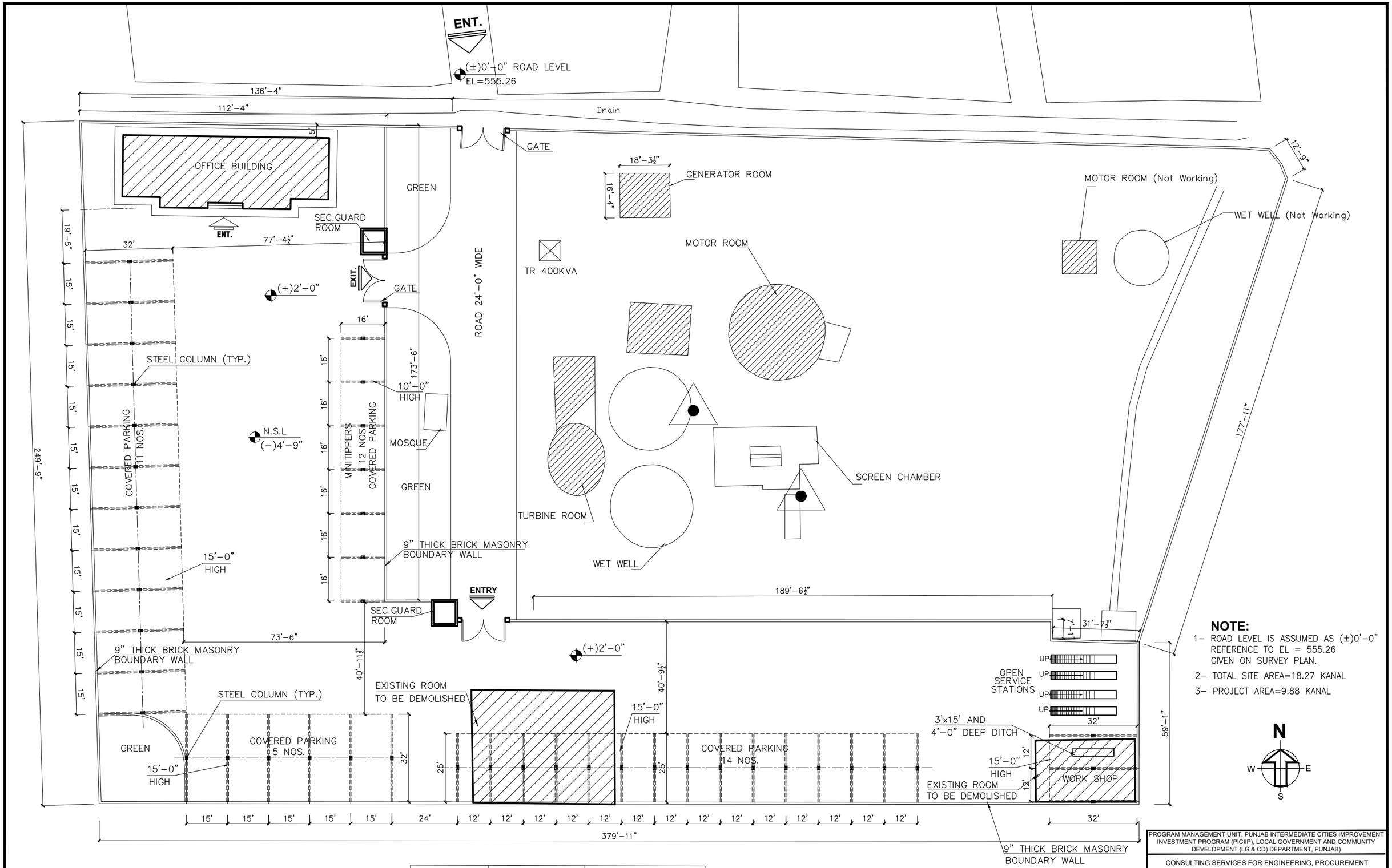

NOTE:

1- ROAD LEVEL IS ASSUMED AS (±)0'-0" REFERENCE TO EL = 555.26 GIVEN ON SURVEY PLAN.

2- TOTAL SITE AREA=18.27 KANAL

3- PROJECT AREA=9.88 KANAL

SCHEDULE OF INTERNAL FINISHES

LEGEND

SKIRTING WALL
FLOOR CEILING

1 800 mm THICK PRECAST INTERLOCKING CONCRETE PAVERS WITH CONCRETE CURB STONE WHERE MENTIONED (APPROVED MAKE & SHADE)

SHED SIZE	NO.OF SHEDS	NO.OF VEHICLES
15'x32'	16 NOS.	16 NOS.
12'x25'	14 NOS.	14 NOS.
16'x16'	06 NOS.	12 NOS.
TOTAL NOS. OF VEHICLES = 42 NOS.		

REFERENCE DRAWINGS	REV NO.	DATE	DESCRIPTION	BY	CKD.	APPR.
	1	20-10-2020	PROVISION OF DITCH & RAMP	Dilsher		

PROGRAM MANAGEMENT UNIT, PUNJAB INTERMEDIATE CITIES IMPROVEMENT INVESTMENT PROGRAM (PICIIP), LOCAL GOVERNMENT AND COMMUNITY DEVELOPMENT (LG & CD) DEPARTMENT, PUNJAB)

CONSULTING SERVICES FOR ENGINEERING, PROCUREMENT AND CONSTRUCTION MANAGEMENT (EPCM) CONSULTANT.

PARKING SHEDS & ALLIED STRUCTURES
FREED TOWN, SAHIWAL
LAYOUT PLAN

NATIONAL ENGINEERING SERVICES PAKISTAN (PVT) LTD LAHORE

DESN. NESPAK
DWN. dilsher
FILE
CKD.
SUBM.

RECOMMENDED | VER./CKD. | APPROVED

DATE: OCT. 2021
DRAWING NO.: 3976/311/TD/B01
REV.: 1

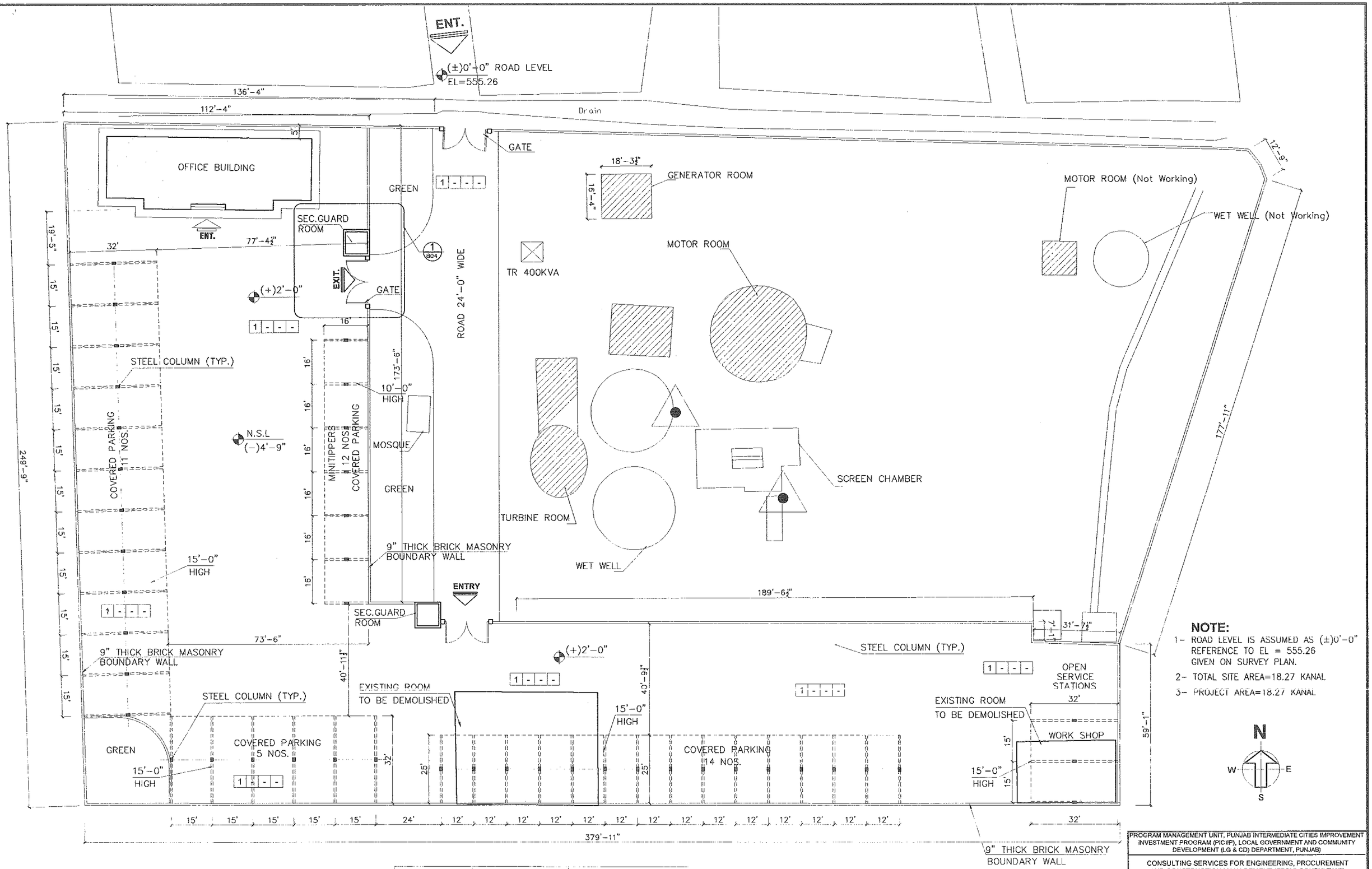

NOTE:

1- ROAD LEVEL IS ASSUMED AS (±)0'-0" REFERENCE TO EL = 555.26 GIVEN ON SURVEY PLAN.

2- TOTAL SITE AREA=18.27 KANAL

3- PROJECT AREA=18.27 KANAL

SCHEDULE OF INTERNAL FINISHES

LEGEND

SKIRTING WALL

FLOOR | CEILING

① 800 mm THICK PRECAST INTERLOCKING CONCRETE PAVERS WITH CONCRETE CURB STONE WHERE MENTIONED (APPROVED MAKE & SHADE)

SHED SIZE	NO.OF SHEDS	NO.OF VEHICLES
15'x32'	16 NOS.	16 NOS.
12'x25'	14 NOS.	14 NOS.
16'x16'	06 NOS.	12 NOS.
TOTAL NOS. OF VEHICLES = 42 NOS.		

REFERENCE DRAWINGS	REV NO.	DATE	DESCRIPTION	BY	CKD.	APPR.

PROGRAM MANAGEMENT UNIT, PUNJAB INTERMEDIATE CITIES IMPROVEMENT INVESTMENT PROGRAM (PICIIP), LOCAL GOVERNMENT AND COMMUNITY DEVELOPMENT (LG & CD) DEPARTMENT, PUNJAB

CONSULTING SERVICES FOR ENGINEERING, PROCUREMENT AND CONSTRUCTION MANAGEMENT (EPCM) CONSULTANT.

PARKING SHEDS & ALLIED STRUCTURES
FREED TOWN, SAHIWAL
LAYOUT PLAN

NESPAK

DESN. NESPAK	RECOMMENDED	VER./CKD.	APPROVED
DWN. dilsher			
FILE	DATE AUGUST, 2020	DRAWING NO. 3976/311/TD/B01	REV. 0
CKD.			
SUBM.			

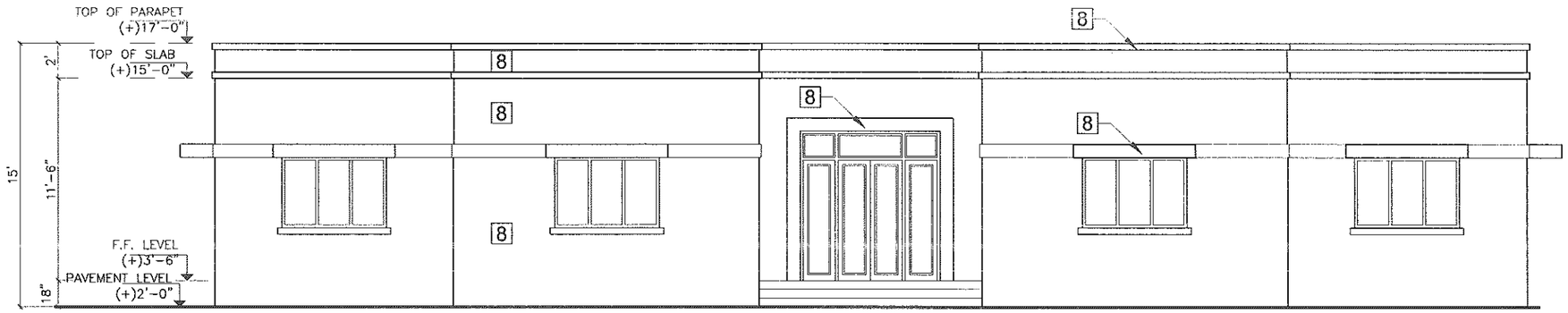

1 ELEVATION
SCALE: 1/4"=1'-0"

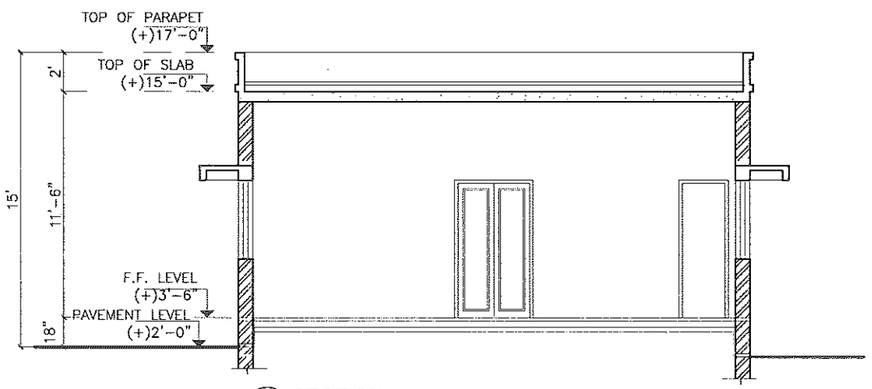

A SECTION
SCALE: 1/4"=1'-0"

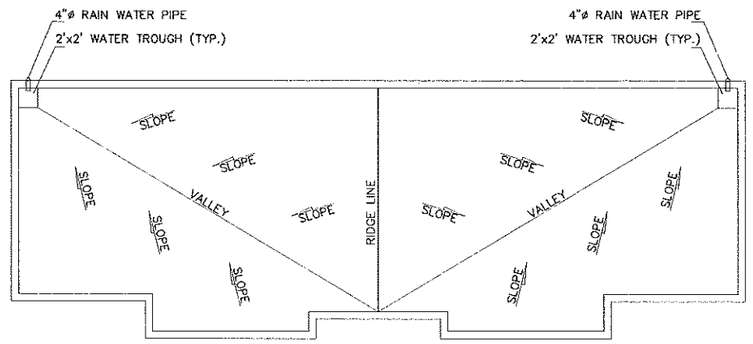

ROOF PLAN

SCHEDULE OF INTERNAL AND EXTERNAL FINISHES

LEGEND

SKIRTING FLOOR WALL CEILING

1. 12"x12"x3/4" CHINA VERONA MARBLE
2. 4"X12"X1/2" CHINA VERONA MARBLE SKIRTING
3. LOCAL MATT CERAMIC TILES (APPROVED MAKE & SHADE))
4. LOCAL GLAZED CERAMIC TILES OF (APPROVED MAKE & SHADE) 6'-6" HIGH FOR BATH ROOMS WITH VINYL EMULSION PAINT(OF APPROVED MAKE & SHADE) ABOVE UPTO CEILING
5. SINGLE PIECE 3/4" THICK VERONA MARBLE SLAB FOR TREADS SINGLE PIECE 1/2" THICK VERONA MARBLE SLAB FOR RISERS
6. VINYL EMULSION PAINT ON C.S PLASTER (APPROVED MAKE & SHADE)
7. 2" THICK P.C.C (1:2:4)
8. WEATHER SHIELD PAINT OF APPROVED (APPROVED MAKE & SHADE)

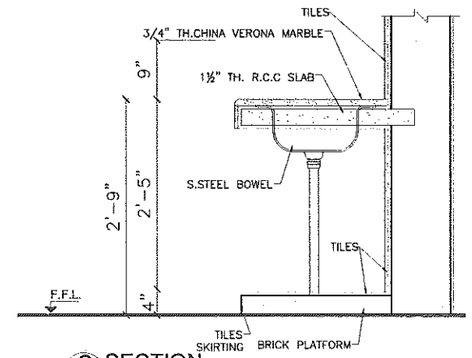

C SECTION
SCALE:1"=1'

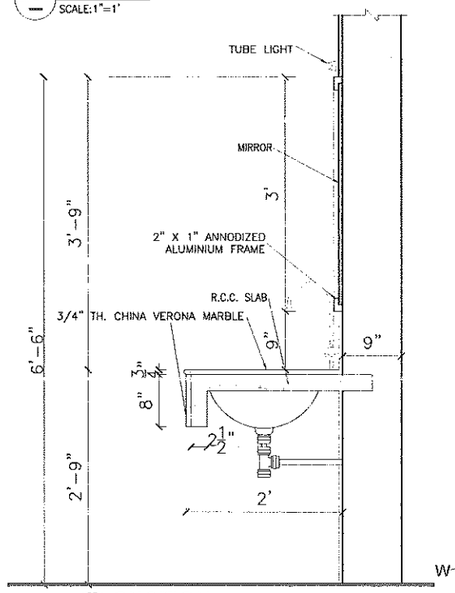

B SECTION
SCALE:1"=1'

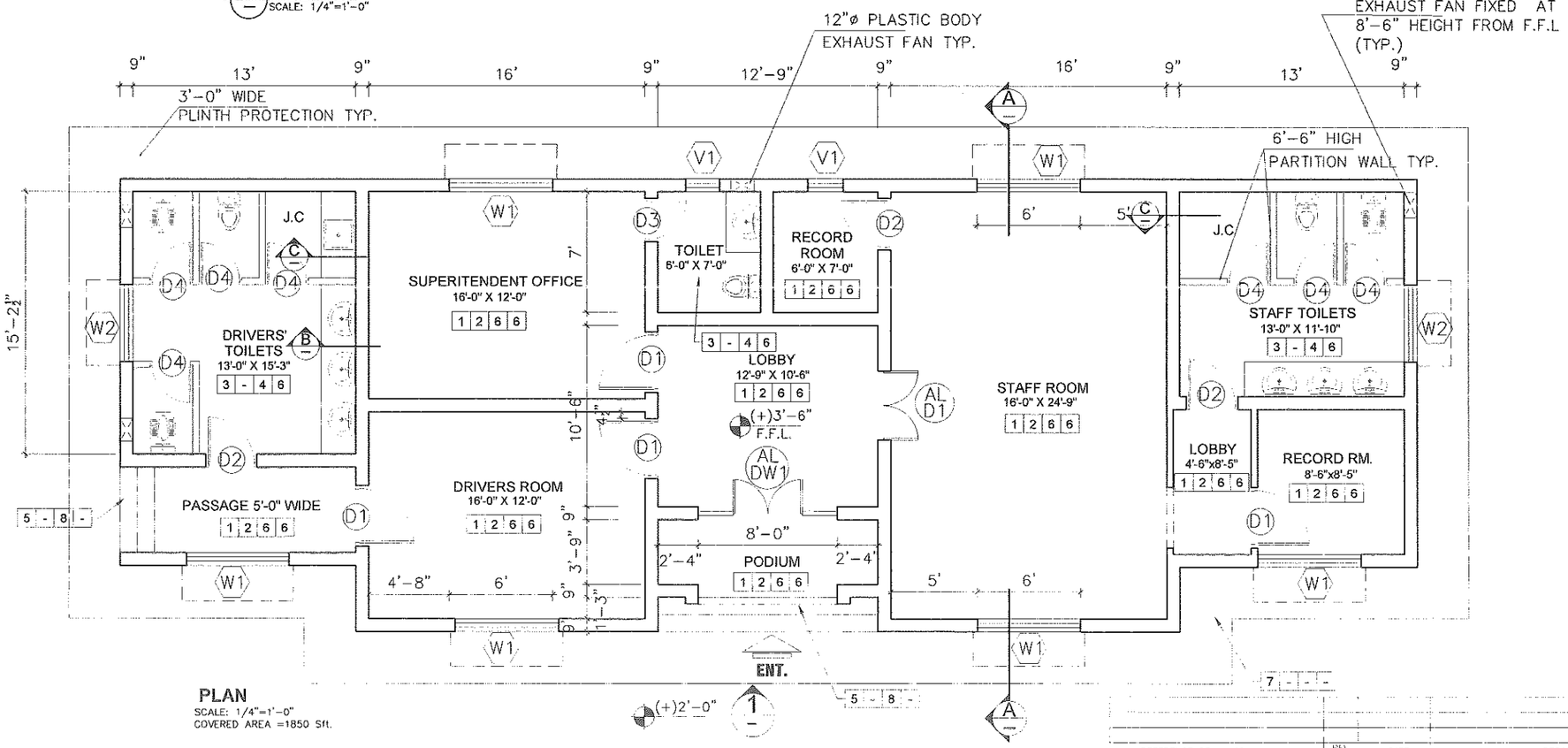

PLAN
SCALE: 1/4"=1'-0"
COVERED AREA =1850 Sft.

REFERENCE DRAWINGS	REV. NO.	DATE	DESCRIPTION	BY	CKD.	APPR.

PROGRAM MANAGEMENT UNIT, PUNJAB INTERMEDIATE CITIES IMPROVEMENT INVESTMENT PROGRAM (PICIIP), LOCAL GOVERNMENT AND COMMUNITY DEVELOPMENT (LG & CD) DEPARTMENT, PUNJAB)

CONSULTING SERVICES FOR ENGINEERING, PROCUREMENT AND CONSTRUCTION MANAGEMENT (EPCM) CONSULTANT.

OFFICE BUILDING
COVERED PARKING SHEDS AT FREED TOWN, SAHIWAL
PLAN, ELEVATION & SECTION

NESPAK

DESN. NESPAK	RECOMMENDED	VER./CKD.	APPROVED
DWN. dilsher			
FILE	DATE AUGUST, 2020	DRAWING NO. 3976/311/TD/B02	REV. 0
CKD.			
SUBM.			

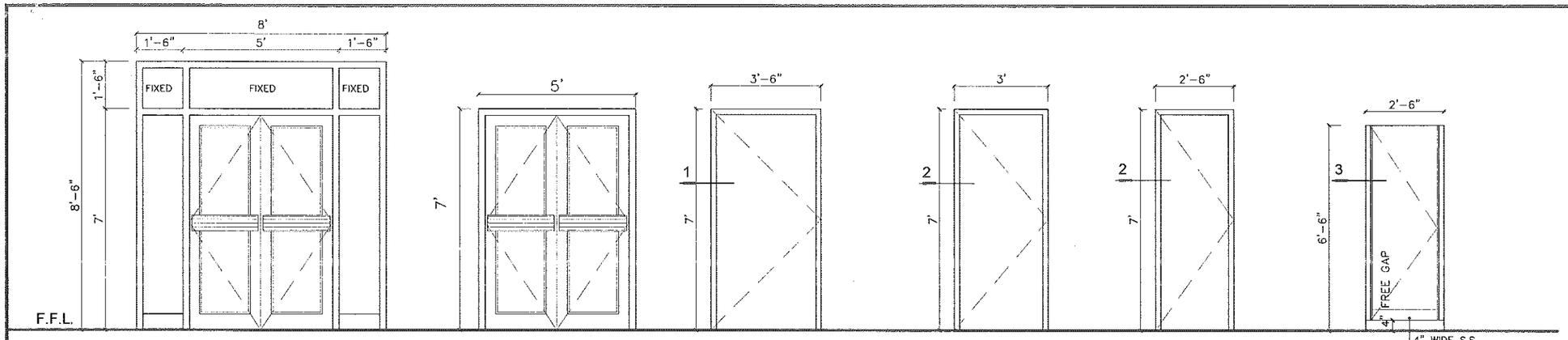

ALDW 1
ALUMINUM GLAZED DOOR WINDOW

ALD1
ALUMINUM OPENABLE GLASS DOOR

D1
SOLID CORE FLUSH DOOR
WITH DEODAR PLY BOTH SIDE
(POLISHED)

D2
SOLID CORE FLUSH DOOR
WITH DEODAR PLY OUTSIDE (POLISHED)
INSIDE (ENAMEL PAINTED)

D3
SOLID CORE FLUSH DOOR
WITH DEODAR PLY OUTSIDE (POLISHED)
INSIDE (ENAMEL PAINTED)

D4
SOLID CORE FLUSH DOOR
FORMICA PRESSED ON BOTH SIDES
OVER COMMERCIAL PLY.

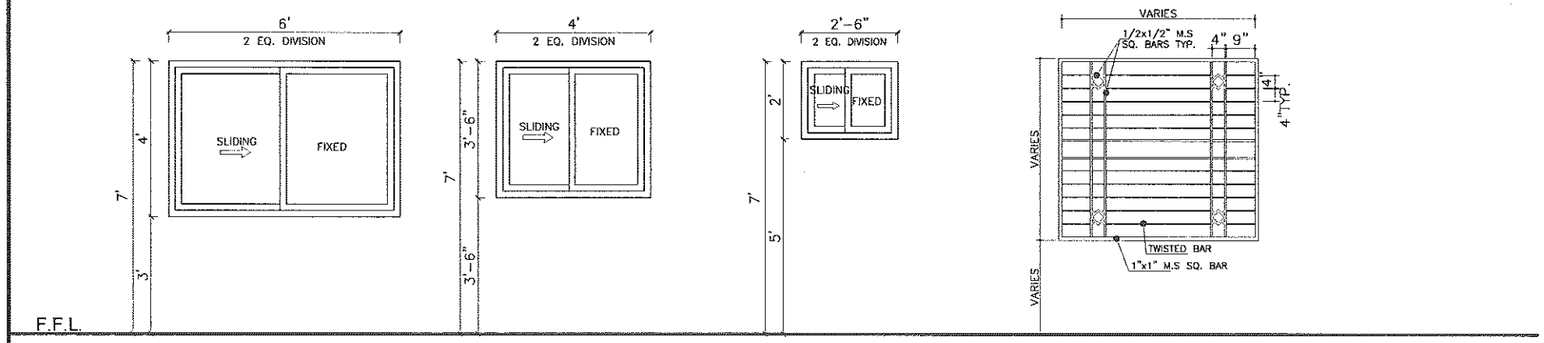

W 1
ALUMINUM GLAZED WINDOW

W 2
ALUMINUM GLAZED WINDOW

V1
ALUMINUM GLAZED VENTILATOR

TYPICAL DETAIL OF STEEL GRILL

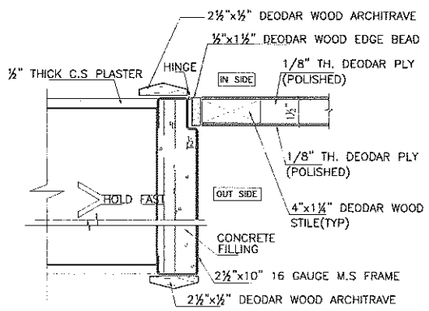

SECTION -1
SCALE 3"=1'-0"

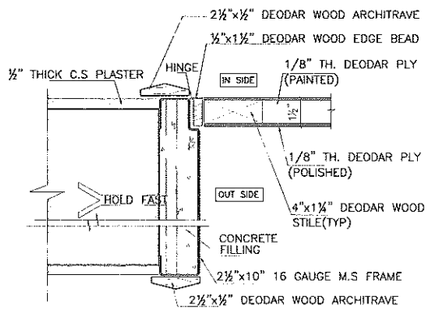

SECTION -2
SCALE 3"=1'-0"

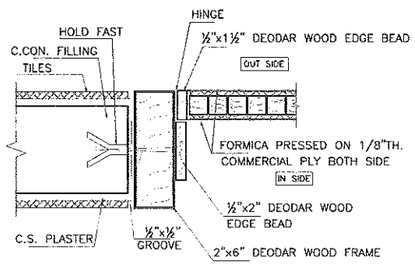

SECTION -3
SCALE 3"=1'-0"

REFERENCE DRAWINGS	REV NO.	DATE	DESCRIPTION	BY	CKD.	APPR

PROGRAM MANAGEMENT UNIT, PUNJAB INTERMEDIATE CITIES IMPROVEMENT INVESTMENT PROGRAM (PICIIP), LOCAL GOVERNMENT AND COMMUNITY DEVELOPMENT (LG & CD) DEPARTMENT, PUNJAB)

CONSULTING SERVICES FOR ENGINEERING, PROCUREMENT AND CONSTRUCTION MANAGEMENT (EPCM) CONSULTANT.

OFFICE BUILDING
COVERED PARKING SHEDS AT FREED TOWN, SAHIWAL
DOORS AND WINDOWS DETAILS

NESPAK

DESN. NESPAK	RECOMMENDED	VER./CKD.	APPROVED
DWN. dilsher			
FILE	DATE	DRAWING NO.	REV.
CKD.	AUGUST, 2020	3976/311/TD/B03	0
SUBM.			

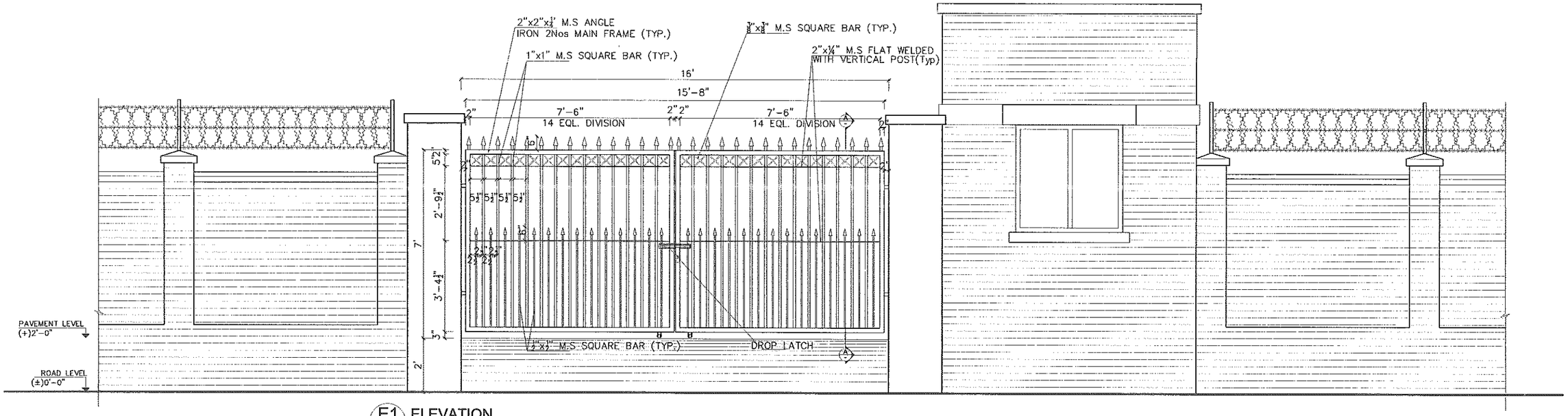

E1 ELEVATION
SCALE ½"=1'-0"

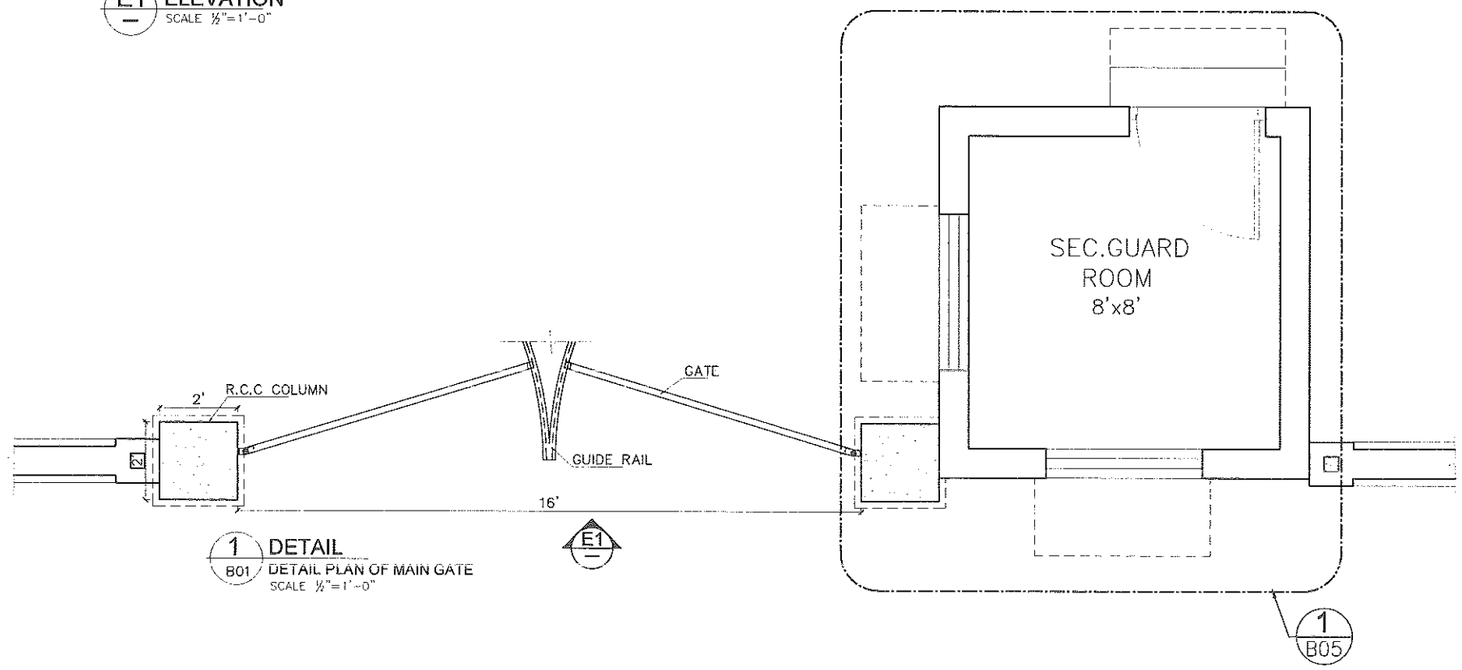

1 B01 DETAIL
DETAIL PLAN OF MAIN GATE
SCALE ½"=1'-0"

REFERENCE DRAWINGS	REV NO	DATE	DESCRIPTION	BY	CKD	APPR

PROGRAM MANAGEMENT UNIT, PUNJAB INTERMEDIATE CITIES IMPROVEMENT INVESTMENT PROGRAM (PICIIP), LOCAL GOVERNMENT AND COMMUNITY DEVELOPMENT (LG & CD) DEPARTMENT, PUNJAB)

CONSULTING SERVICES FOR ENGINEERING, PROCUREMENT AND CONSTRUCTION MANAGEMENT (EPCM) CONSULTANT.

PARKING SHEDS & ALLIED STRUCTURES
FREED TOWN, SAHIWAL
PLAN & ELEVATION OF MAIN GATE

NESPAK

DESN. NESPAK	RECOMMENDED	VER./CKD.	APPROVED
DWN. dilsher			
FILE			
CKD.	DATE JULY, 2020	DRAWING NO. 3976/311/TD/B04	REV. 0
SUBM.			

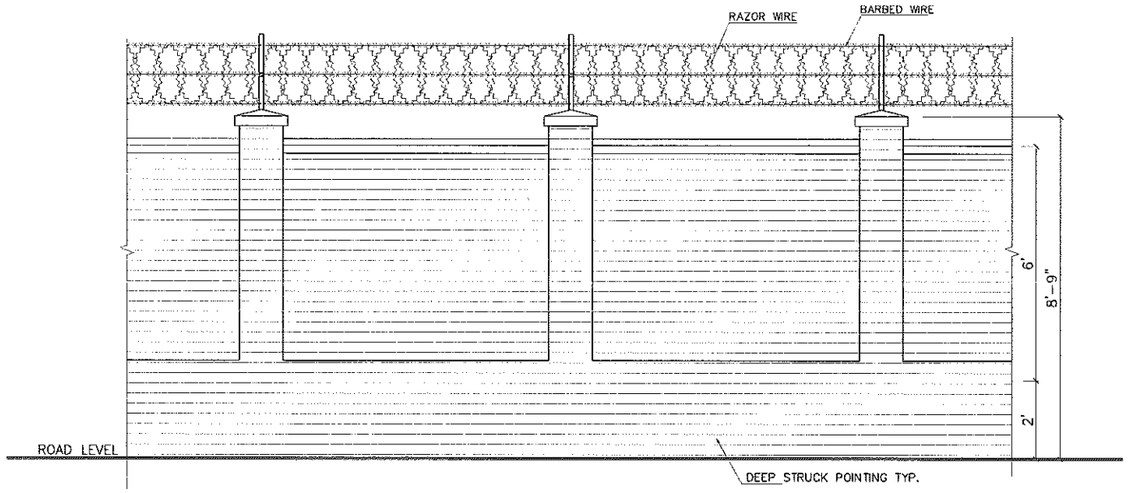

TYPICAL ELEVATION OF BOUNDARY WALL (OUT SIDE)
SCALE 3/8"=1'-0"

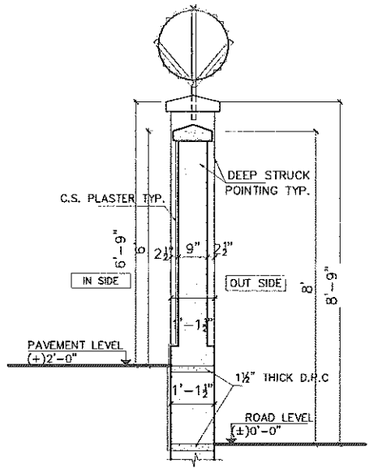

C SECTION (BOUNDARY WALL)

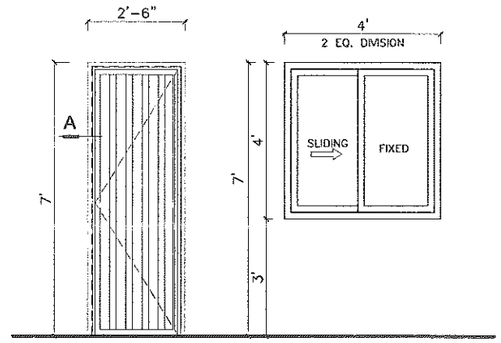

STD 1
STEEL DOOR

W 1
ALUMINUM GLAZED WINDOW

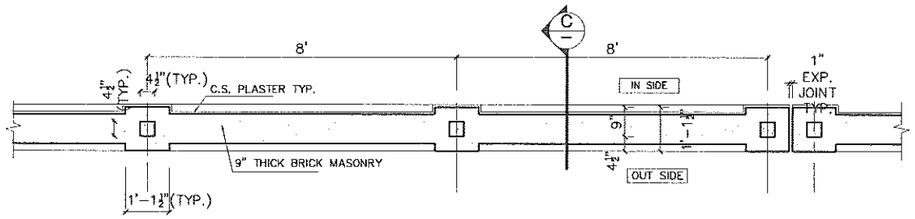

BOUNDARY WALL PLAN (TYP.)
SCALE 3/8"=1'-0"

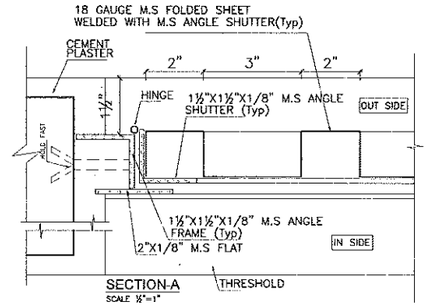

SECTION-A
SCALE ½"=1"

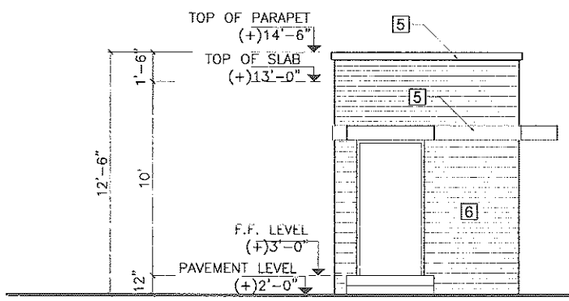

1 ELEVATION
SCALE: 1/4"=1'-0"

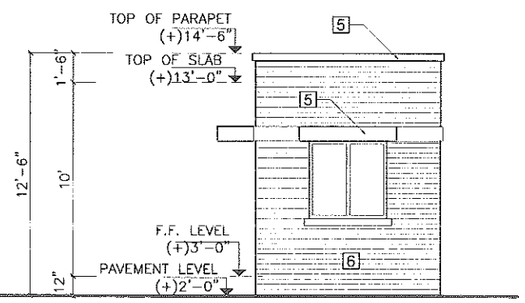

2 ELEVATION
SCALE: 1/4"=1'-0"

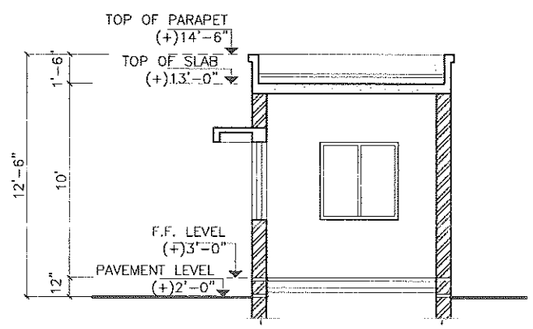

A SECTION
SCALE: 1/4"=1'-0"

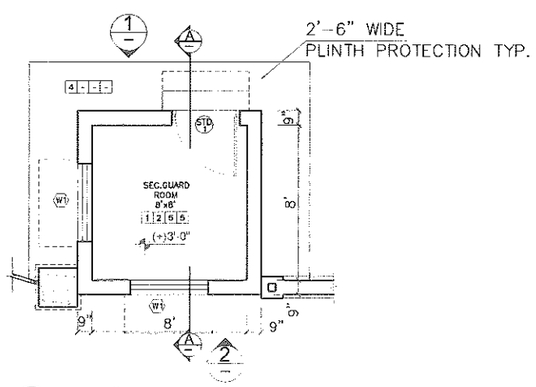

1 DETAIL PLAN
B04 **SEC.GUARD ROOM**
SCALE: 1/4"=1'-0"

SCHEDULE OF INTERNAL AND EXTERNAL FINISHES

LEGEND

SKIRTING FLOOR WALL CEILING

1. 12"x12"x3/4" CHINA VERONA MARBLE
2. 4"X12"X1/2" CHINA VERONA MARBLE SKIRTING
3. VINYL EMULSION PAINT ON C.S PLASTER (APPROVED MAKE & SHADE)
4. 2" THICK P.C.C (1:2:4)
5. WEATHER SHIELD PAINT OF APPROVED (APPROVED MAKE & SHADE)
6. DEEP STRUCK POINTING OF CEMENT SURKHI

REFERENCE DRAWINGS	REV NO.	DATE	DESCRIPTION	BY	CKD.	APPR.

PROGRAM MANAGEMENT UNIT, PUNJAB INTERMEDIATE CITIES IMPROVEMENT INVESTMENT PROGRAM (PICIIP), LOCAL GOVERNMENT AND COMMUNITY DEVELOPMENT (LG & CD) DEPARTMENT, PUNJAB)

CONSULTING SERVICES FOR ENGINEERING, PROCUREMENT AND CONSTRUCTION MANAGEMENT (EPCM) CONSULTANT.

PARKING SHEDS & ALLIED STRUCTURES
FREED TOWN, SAHIWAL
DETAILS OF SEC.GUARD ROOM & BOUNDARY WALL

NESPAK

DESN. NESPAK	RECOMMENDED	VER./CKD.	APPROVED
DWN. dilsher			
FILE	DATE JULY, 2020	DRAWING NO. 3976/311/TD/B05	REV. 0
CKD.			
SUBM.			

GENERAL NOTES:

1. THIS DRAWING SHALL BE READ IN CONJUNCTION WITH ITEMS OF BILL OF QUANTITIES AND TECHNICAL SPECIFICATION
2. THIS DRAWING SHALL BE COORDINATED WITH OTHER DISCIPLINES WORKS FOR ROUTING, SPACING AND INSTALLATIONS
3. THE MINIMUM SIZE OF THE PVC CONDUIT SHALL BE 25mm (1") DIA.
4. LIGHT CIRCUIT WIRING SHALL BE WITH 3 x 2.5 mm Sq & LIGHT POINT WIRING SHALL BE WITH 3x1.5 mm. Sq SINGLE CORE STRANDED CU. PVC CABLES
5. ALL POWER SOCKETS (15/20Amp) SHALL BE WIRED WITH 3 x 6mm.Sq LIGHT PLUG (10/13Amp) SOCKETS FIRST POINT SHALL BE WIRED WITH 3 x 4mm.Sq & 10Amp. SOCKETS POINT TO POINT WIRED WITH 3 x 2.5mm. Sq STRANDED CU. PVC CABLES
6. ALL SINGLE CORE WIRES SHALL HAVE THE FOLLOWING COLOURS.
   PHASE WIRES..... RED, YELLOW & BLUE
   NEUTRAL WIRES.....BLACK
   C.P.C.....GREEN/YELOW (AS PER B.O.Q)
7. THE WIRING SHALL BE STARTED ONLY AFTER THE CONDUIT SYSTEM IS COMPLETELY INSTALLED AND ALL OUTLET BOXES ETC. ARE FIXED IN THEIR POSITIONS.
8. ALL POWER/LIGHT PLUG SOCKETS WIRING SHALL BE SEGREGATED AND HAVE INDEPENDENT WIRES RIGHT FROM MINIATURE CIRCUIT BREAKERS IN DISTRIBUTION BOARD.
9. ACTUAL LOCATION OF ALL OUTLETS MUST BE VERIFIED BY THE CONTRACTOR SITE ENGINEER BEFORE INSTALLATION COMMENCES
10. THE MOUNTING HEIGHT OF THE SOCKET OUTLETS SHALL BE MINIMUM 300mm (FFL)
11. THE MOUNTING HEIGHT OF THE LIGHTING SWITCHES SHALL BE MINIMUM 1100mm (FFL)
12. NO LUBRICATION EXCEPT AS RECOMMENDED BY MANUFACTURER SHALL BE USED ON WIRES FOR REDUCING FRICTION. NO OIL OR SOAP OF ANY KIND WILL BE ALLOWED ON WIRES FOR THIS PURPOSE.
13. THE CONTRACTOR SHALL SUBMIT CONDUITS LAYOUT PLAN BASED UPON THE ELECTRIFICATION DRAWINGS FOR THE APPROVAL OF ELECTRICAL ENGINEER, BEFORE POURING OF ROOF SLABS, WALL AND COLUMNS.
14. ALL THE ELECTRICAL WORKS SHALL BE EXECUTED IN STRICT ACCORDANCE WITH THE PROJECT SPECIFICATION
15. THE ELECTRICAL EQUIPMENT SHALL BE SUPPLIED FROM APPROVED MANUFACTURER AS PER APPLICABLE STANDARDS AND CODES

LEGEND

SYMBOL	DESCRIPTION
	MAIN PANEL BOARD(MPB)
	SUB MAIN PANEL BOARD(SMPB)
	DISTRIBUTION BOARD (DB)
	MOULDED CASE CIRCUIT BREAKER
V	VOLTMETER
A	AMMETER
	SELECTOR SWITCH
	WALL BRACKET FAN
	EXHAUST FAN
	SINGLE POLE 1-WAY SWITCH
	15/20 AMP 3 PIN SINGLE PHASE, NEUTRAL & EARTH SWITCH SOCKET UNIT (AWAY FROM SWITCH BOARD)
	10/13 AMPS 3 PIN SINGLE PHASE SWITCH SOCKET UNIT (AWAY FROM SWITCH BOARD)

LIGHTING FITTINGS SCHEDULE

SYMBOL	DESCRIPTION
	WALL BRACKET 18W LED LIGHT
	BATTEN SURFACE MOUNTED 18W LED LIGHT
	BATTEN SURFACE MOUNTED 10W LED LIGHT ABOVE MIRROR
	WATER TIGHT 20W IP65 LED LIGHT
	SURFACE MOUNTED DOWN LIGHTER 18W LED LIGHT

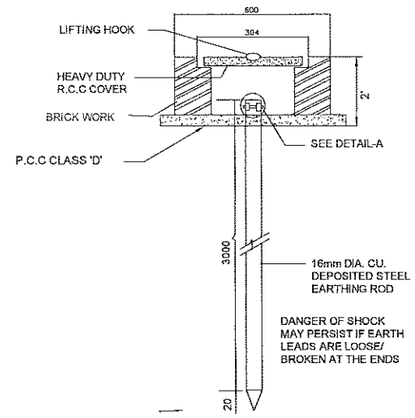

ROD TYPE EARTH POINT DETAIL FOR DB,S

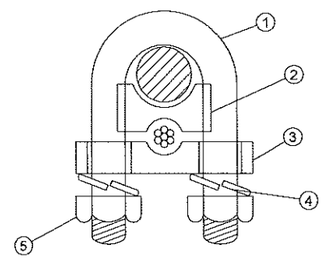

DETAIL -'A'

ITEM NO.	ITEM NAME	MATERIAL
1	U-BOLT	MILD STEEL
2	SPACER	CAST IRON
3	BASE	MILD STEEL
4	SPRING WASHER	CARBON STEEL
5	NUT	MILD STEEL

REFERENCE DRAWINGS	REV NO.	DATE	DESCRIPTION	BY	CKD.	APPR.

PROGRAM MANAGEMENT UNIT, PUNJAB INTERMEDIATE CITIES IMPROVEMENT INVESTMENT PROGRAM (PICIIP), LOCAL GOVERNMENT AND COMMUNITY DEVELOPMENT (LG & CD) DEPARTMENT, PUNJAB)

CONSULTING SERVICES FOR ENGINEERING, PROCUREMENT AND CONSTRUCTION MANAGEMENT (EPCM) CONSULTANT.

COVERED PARKING SHEDS AT FREED TOWN, SAHIWAL
LEGEND, GENERAL NOTES LIGHTING FITTING FOR SHEDULE & EARTH POINT DETAILS

NESPAK

DESN. NESPAK
DWN. SA
FILE
CKD.
SUBM.

RECOMMENDED | VER.CKD. | APPROVED

DATE SEP. 2020 | DRAWING NO. 3976/161/TD/5E001 | REV. 0

LEGEND:

SYMBOL	DESCRIPTION
	INDICATING LIGHT
	CURRENT TRANSFORMER
	MOULDED CASE CIRCUIT BREAKER
	VOLT METER WITH SELECTOR SWITCH & FUSE
	AMMETER WITH SELECTOR SWITCH & FUSE

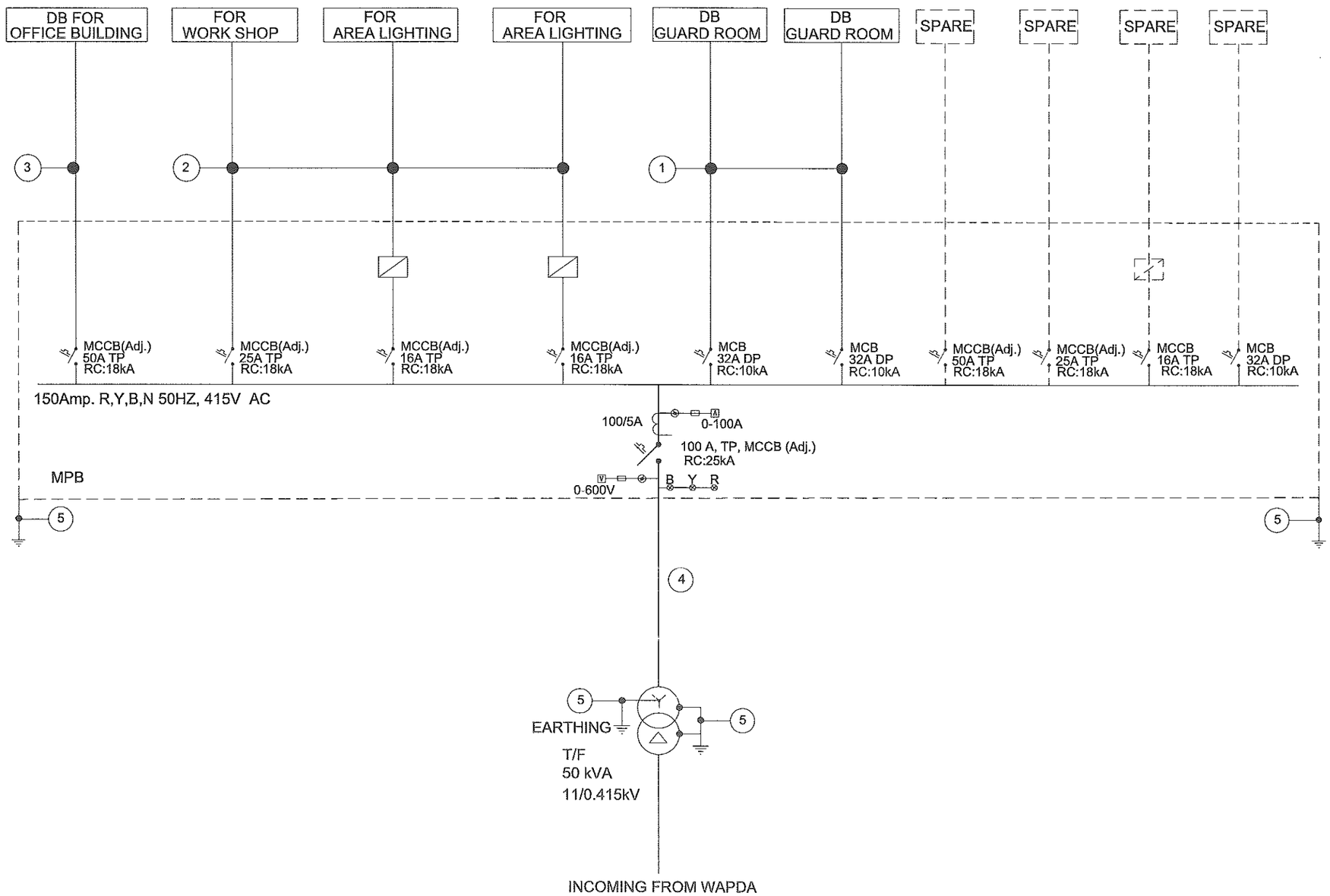

LEGEND:

1. 2 CORE 10 mm2 Cu./PVC/PVC+ 1 Core 10 mm2 Cu./PVC AS (CPC).
2. 4 CORE 10 mm2 Cu./PVC/PVC+ 1 Core 10 mm2 Cu./PVC AS (CPC).
3. 4 CORE 25 mm2 Cu./PVC/PVC+ 1 Core 16 mm2 Cu./PVC AS (CPC).
4. 4 CORE 50 mm2 Cu./PVC/PVC+ 1 Core 25 mm2 Cu./PVC AS (CPC).
5. 1 Core 25 mm2 Cu./PVC AS (CPC/ECC).

NOTES:-

1. THIS DRAWING IS FOR INDICATIVE DESIGN MODEL AND SHALL BE READ IN CONJUNCTION WITH ALL OTHER DRAWINGS, SPECIFICATIONS AND ITEMS OF BILL OF QUANTITIES.
2. THE CONTRACTOR SHALL BE SUBMITTED SHOP DRAWINGS, VOLTAGE DROP CALCULATION TO THE ENGINEER AT THE TIME OF CONTRACT AWARD AND BEFORE THE WORK COMMENCES AT SITE.
3. THE ELECTRICAL WORKS SHALL BE EXECUTED IN LINE WITH THE PROJECT SPECIFICATIONS
4. THE PUMPING STATION EQUIPMENT ALONG WITH MOTORS, MOTOR CONTROL CENTERS/MOTOR CONTROL UNITS AND ASSOCIATED STARTING DEVICES ARE NOT INCLUDED IN ELECTRICAL SCOPE OF WORK.
5. THE LOCATION OF THE EQUIPEMENTS SHOWN ON THE LAYOUT PLAN IS TENTATIVE LOCATION. LOCATION OF THE TRANSFORMER, DG SETS & PANEL BOARD SHALL BE FINALIZED AT PER SITE CONDITION.

REFERENCE DRAWINGS	REV NO.	DATE	DESCRIPTION	BY	CKD.	APPR.

PROGRAM MANAGEMENT UNIT, PUNJAB INTERMEDIATE CITIES IMPROVEMENT INVESTMENT PROGRAM (PICIIP), LOCAL GOVERNMENT AND COMMUNITY DEVELOPMENT (LG & CD) DEPARTMENT, PUNJAB)

CONSULTING SERVICES FOR ENGINEERING, PROCUREMENT AND CONSTRUCTION MANAGEMENT (EPCM) CONSULTANT.

COVERED PARKING SHEDS AT FAREED TOWN, SAHIWAL
SINGLE LINE DIAGRAM

NESPAK

DESN. NESPAK	RECOMMENDED	VER./CKD.	APPROVED
DWN. SA			
FILE			
CKD.	DATE	DRAWING NO.	REV.
SUBM.	SEP. 2020	3976/161/TD/5E002	0

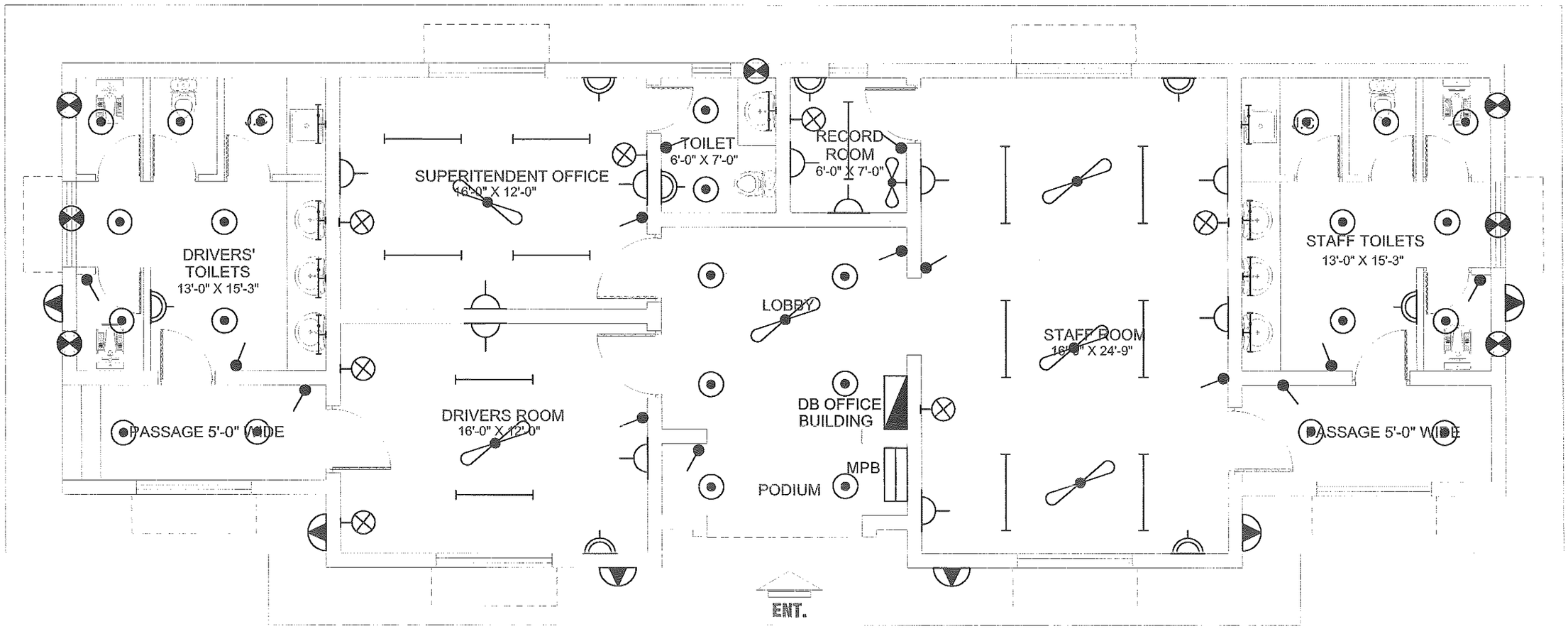

REFERENCE DRAWINGS	REV NO.	DATE	DESCRIPTION	BY	CKD.	APPR.

PROGRAM MANAGEMENT UNIT, PUNJAB INTERMEDIATE CITIES IMPROVEMENT INVESTMENT PROGRAM (PICIIP), LOCAL GOVERNMENT AND COMMUNITY DEVELOPMENT (LG & CD) DEPARTMENT, PUNJAB)

CONSULTING SERVICES FOR ENGINEERING, PROCUREMENT AND CONSTRUCTION MANAGEMENT (EPCM) CONSULTANT.

COVERED PARKING SHEDS AT FREED TOWN, SAHIWAL
OFFICE BUILDING
ELECTRIFICATION LAYOUT PLAN

NESPAK

DESN. NESPAK	RECOMMENDED	VERI.CKD.	APPROVED
DWN. SA			
FILE			
CKD.			
SUBM.	DATE SEP. 2020	DRAWING NO. 3976/161/TD/5E003	REV. 0

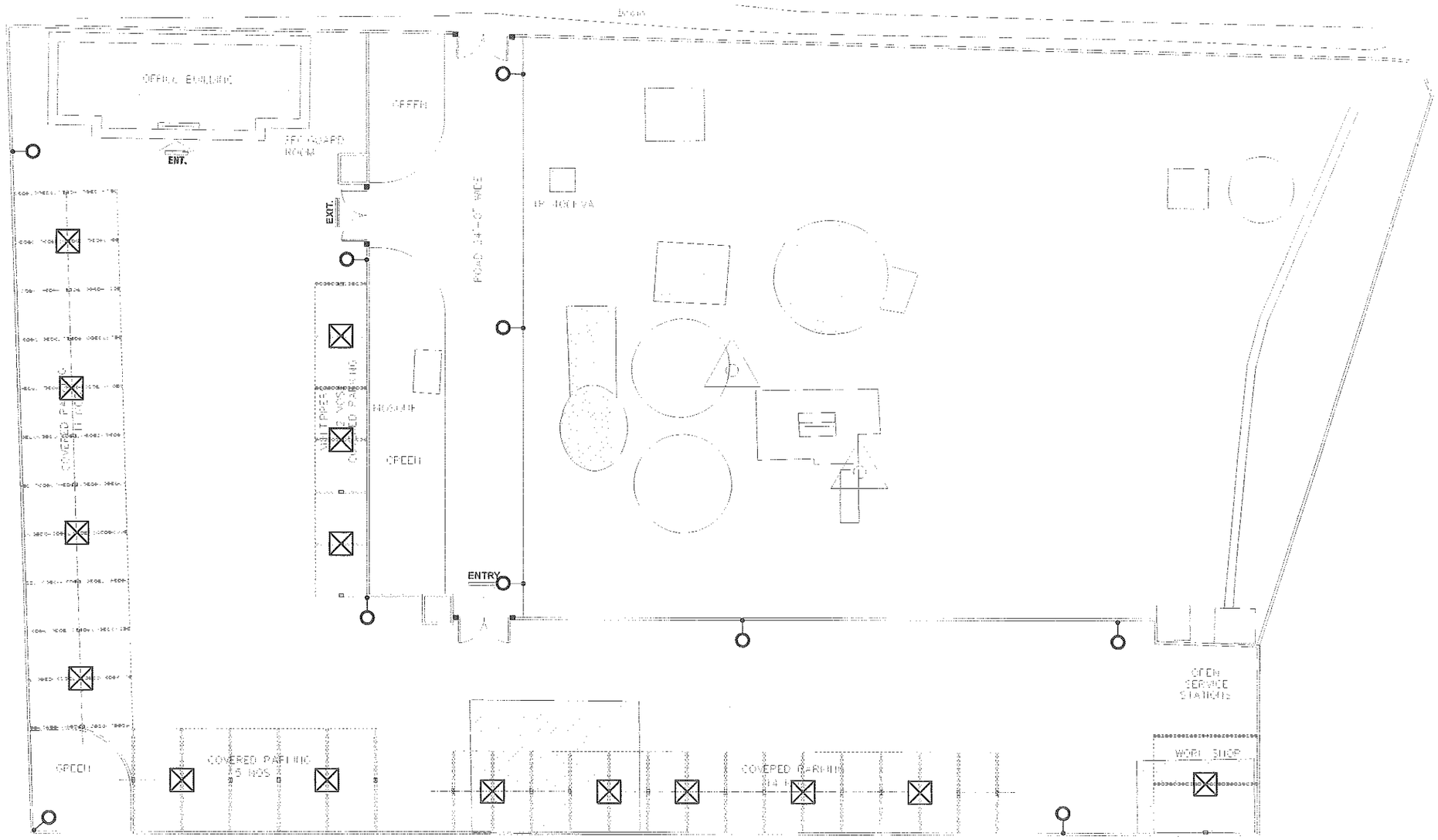

LEGEND:-	
SYMBOL	DESCRIPTION
⊙	10 METER HIGH SINGLE ARM WITH 90W LUMINAIRE HOT DIP GALVANIZED STEEL OCTAGONAL POLE
⊠	LED FLOOD LIGHT 30W (IP-65) WITH COMPLETE
⊡	LED GATE LIGHT 100W (IP-65) WITH COMPLETE

N
W E
S

REFERENCE DRAWINGS	REV NO.	DATE	DESCRIPTION	BY	CKD.	APPR.

PROGRAM MANAGEMENT UNIT, PUNJAB INTERMEDIATE CITIES IMPROVEMENT INVESTMENT PROGRAM (PICIIP), LOCAL GOVERNMENT AND COMMUNITY DEVELOPMENT (LG & CD) DEPARTMENT, PUNJAB)

CONSULTING SERVICES FOR ENGINEERING, PROCUREMENT AND CONSTRUCTION MANAGEMENT (EPCM) CONSULTANT.

COVERED PARKING SHEDS AT FREED TOWN, SAHIWAL

AREA LIGHTING LAYOUT PLAN

NESPAK

		RECOMMENDED	VER./CKD.	APPROVED
DESN.	NESPAK			
DWN.	SA			
FILE				
CKD.				
SUBM.				

DATE	DRAWING NO.	REV.
SEP. 2020	3976/161/TD/5E004	0

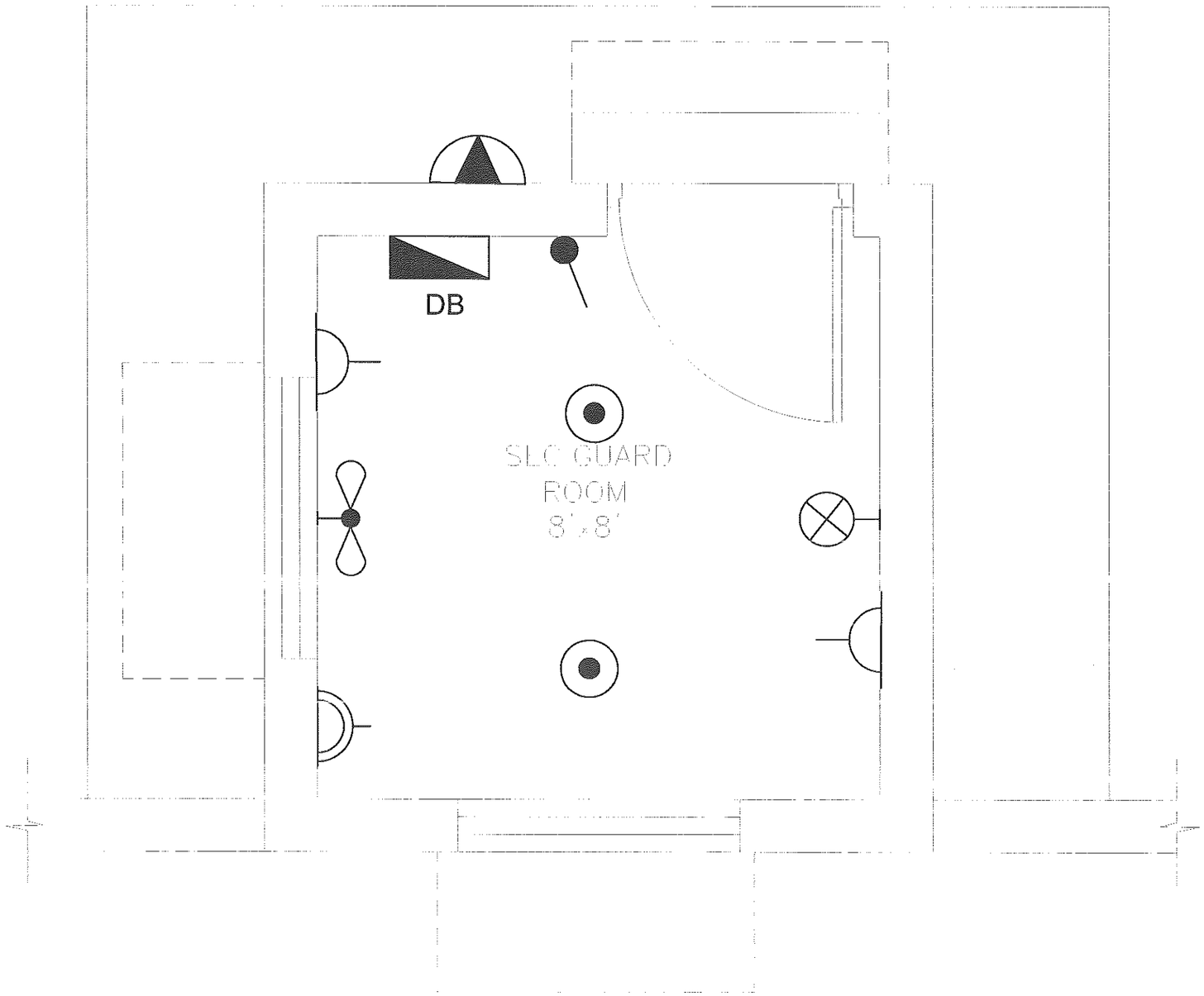

REFERENCE DRAWINGS	REV NO.	DATE	DESCRIPTION	BY	CKD.	APPR.

PROGRAM MANAGEMENT UNIT, PUNJAB INTERMEDIATE CITIES IMPROVEMENT INVESTMENT PROGRAM (PICIIP), LOCAL GOVERNMENT AND COMMUNITY DEVELOPMENT (LG & CD) DEPARTMENT, PUNJAB)

CONSULTING SERVICES FOR ENGINEERING, PROCUREMENT AND CONSTRUCTION MANAGEMENT (EPCM) CONSULTANT.

COVERED PARKING SHEDS AT FREED TOWN, SAHIWAL
GUARD ROOM
ELECTRIFICATION LAYOUT PLAN

NESPAK

DESN. NESPAK	RECOMMENDED	VER./CKD.	APPROVED
DWN. SA			
FILE			
CKD.			
SUBM.	DATE SEP. 2020	DRAWING NO. 3976/161/TD/5E005	REV. 0

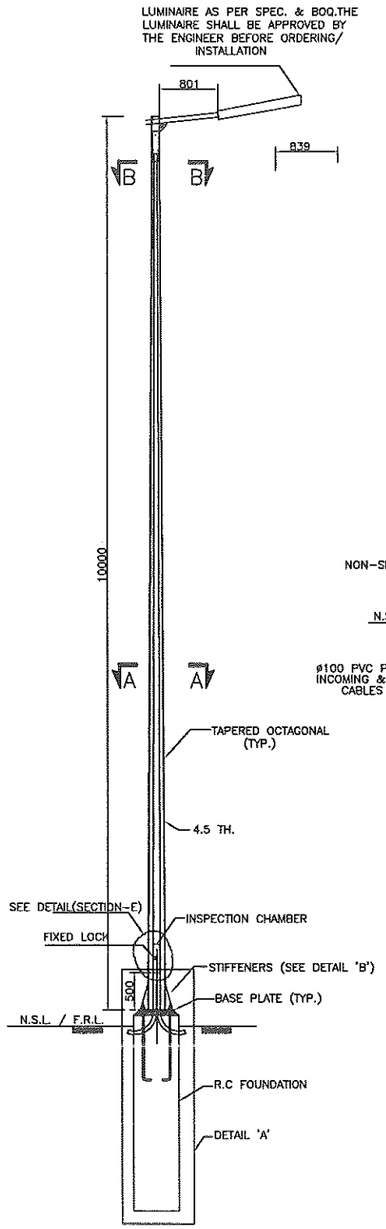

SINGLE LUMINAIRE HOT DIP GALVANIZED STEEL OCTAGONAL POLE

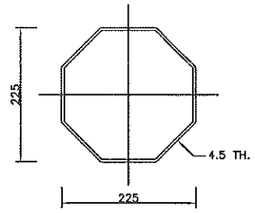

SECTION A–A

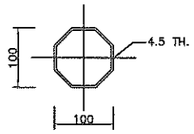

SECTION B–B

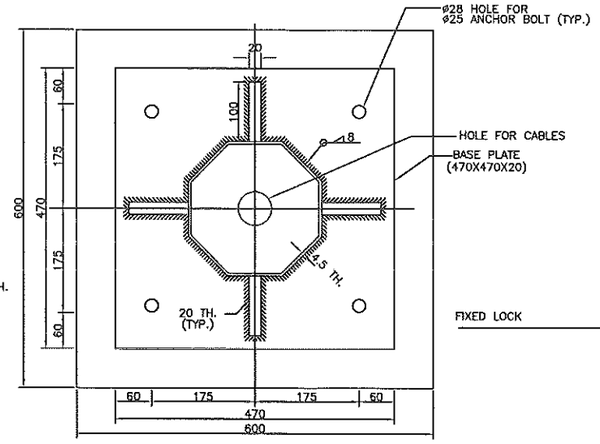

SECTION C–C

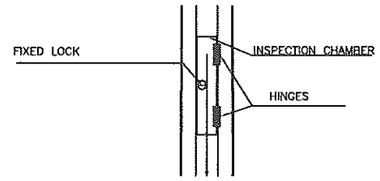

SECTION–E

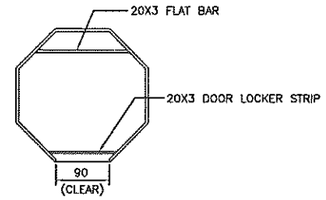

SECTION D–D

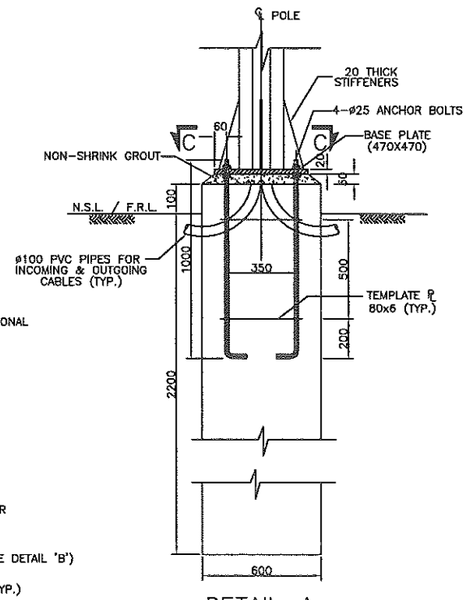

DETAIL–A
(CONCRETE OUTLINE)

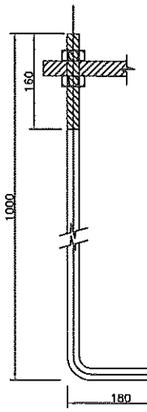

ANCHOR BOLT

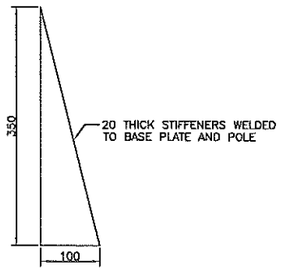

DETAIL–B

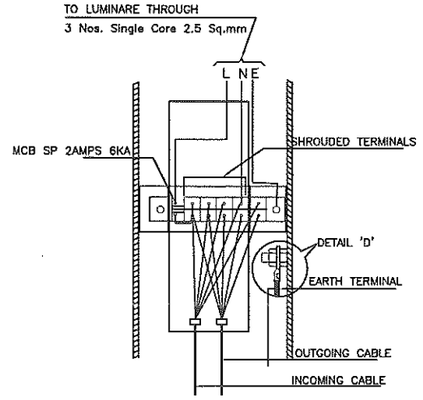

DETAIL OF INSPECTION CHAMBER

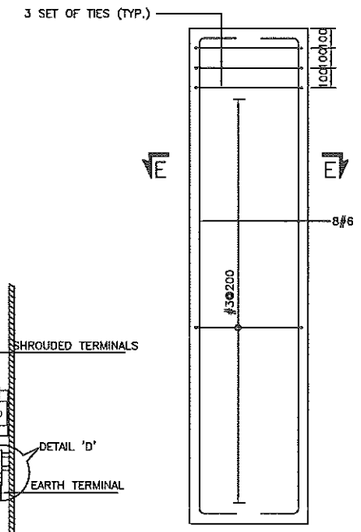

FOUNDATION
(REINFORCEMENT)

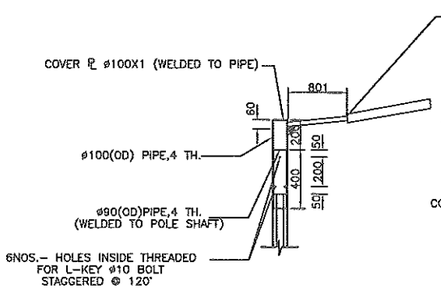

DETAIL–C

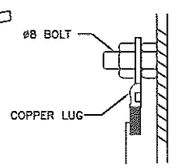

DETAIL–D

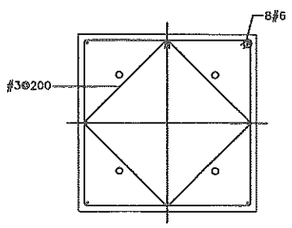

SECTION E–E

NOTES

1. FOR GENERAL NOTES REFER DRAWING NO. G001.
2. ALL DIMENSIONS ARE IN MILLIMETERS UNLESS OTHERWISE SPECIFIED.
3. UNLESS OTHERWISE NOTED, CONCRETE SHALL BE CLASSIFIED AS FOLLOWS.
   CONCRETE CLASS 28 DAYS (15x30 CM) CYLINDER STRENGTH Kg/sq. Cm
   REINFORCED A 210 (3000 psi)
4. THE STEEL FOR POLE & BASE PLATE SHALL BE OF YIELD STRENGTH OF 350MPa(50Ksi). & SHALL CONFORM TO ASTM A36 STEEL.
5. THE ANCHOR BOLTS SHALL CONFORM TO ASTM A307.
6. ALL WELDING SHALL CONFORM TO THE APPLICABLE PROVISIONS OF A.W.S (AMERICAN WELDING SOCIETY) CODE.
7. HOT DIP GALVANIZATION SHALL CONFORM TO BS EN ISO 1461 (IN SIDE & OUT SIDE) OR IN ACCORDANCE WITH ASTM A123 AND A325.

REFERENCE DRAWINGS	REV NO.	DATE	DESCRIPTION	BY	CKD.	APPR.

PROGRAM MANAGEMENT UNIT, PUNJAB INTERMEDIATE CITIES IMPROVEMENT INVESTMENT PROGRAM (PICIIP), LOCAL GOVERNMENT AND COMMUNITY DEVELOPMENT (LG & CD) DEPARTMENT, PUNJAB)

CONSULTING SERVICES FOR ENGINEERING, PROCUREMENT AND CONSTRUCTION MANAGEMENT (EPCM) CONSULTANT.

COVERED PARKING SHEDS FAREED TOWN,SAHIWAL
DETAILS OF 10M CONICAL
OCTAGONAL LIGHTING POLE SINGLE ARM

NESPAK

DESN. NESPAK	RECOMMENDED	VER.CKD.	APPROVED
DWN. SA			
FILE			
CKD.			
SUBM.			

DATE	DRAWING NO.	REV.
SEP. 2020	3976/161/TD/5E006	0

GENERAL NOTES (CCTV) SYSTEMS:

1. ALL DRAWING SHALL BE READ IN CONJUNCTION WITH ITEMS OF BILL OF QUANTITIES AND TECHNICAL SPECIFICATIONS.
2. THE CONTRACTOR SHALL PROCURE, TRANSPORT AND DELIVER EQUIPMENTS AND HARDWARE TO SITE, AFTER APPROVAL OF ENGINEERS.
3. All CCTV WORKS SHALL COMPLY WITH LATEST STANDARDS.
4. ALL CCTV SYSTEM DRAWING SHALL BE COORDINATED WITH OTHER DISCIPLINES WORKS FOR ROUTING, SPACING AND INSTALLATIONS.
5. THE MINIMUM SIZE OF INDOOR PVC CONDUIT SHALL BE 25mm (1") DIA.
6. ACTUAL LENGTH OF DUCT TRAY SHALL BE AS PER SITE REQUIREMENTS.

8. SUITABLE SEALENT SHALL BE USED AT THE ENDS AND IN JOINTS OF THE DUCT FOR PROTECTION FROM WATER AND RODENT.

10. ACTUAL LOCATION OF ALL CONDUITS MUST BE VERIFIED BY THE CONTRACTOR SITE ENGINEER BEFORE INSTALLATION COMMENCES.

11. THE CONTRACTOR SHALL SUBMIT SHOP DRAWINGS AND CONDUITS LAYOUT PLAN FOR ENGINEER APPROVAL BEFORE INSTALLATION

12. ALL THE CCTV WORKS SHALL BE EXECUTED IN STRICT COMPLIANCE WITH THE PROJECT SPECIFICATION.

13. THE CCTV EQUIPMENT SHALL BE SUPPLIED FROM APPROVED MANUFACTURER AND APPLICABLE STANDARDS AND CODES. AS MENTIONED IN TECHNICAL SPECIFICATION.

14. THE CONTRACTOR SHALL SUBMIT CO-ORDINATION SHOP DRAWING OF COMMUNICATION LAYOUT WITH POWER LAYOUT BEFORE EXECUTION OF WORKS.

15. EXACT LOCATION OF ALL CCTV EQUIPMENT SHALL BE DECIDED ON SITE.

16. MANUFACTURER'S RECOMMENDATIONS SHALL BE FOLLOWED FOR INSTALLATION OF ALL CCTV SYSTEMS.

17. All CCTV EQUIPMENT THAT MAY EXPOSE TO WEATHER CONDITIONS SHALL BE WEATHER PROOF.

18. THE CONTRACTOR SHALL COORDINATE AT SITE WITH OTHER SERVICES FOR EXACT LOCATION AND POSITION OF CONDUITS AND COMMUNICATION EQUIPMENT

19. WHERE CABLES ENTER THE BUILDING, THESE SHALL BE LAID IN CLASS D PROTECTIVE PIPE. HAND HOLES SHALL BE PROVIDED OUTSIDE THE BUILDING.

20. THE CONTRACTOR SHALL BE RESPONSIBLE FOR GENERAL INTEGRATION FOR ALL KIND OF SUB-SYSTEMS AND COMMUNICATION EQUIPMENT WITHIN THE SCOPE OF WORK INCLUDING INTERFACE WITH OTHER SYSTEMS.

21. EN 50174-2 RECOMMENDATION SHALL BE FOLLOWED FOR SEPARATION DISTANCE BETWEEN POWER AND COMMUNICATION CABLES.

22. LENGTH OF CAT-6 CABLE MUST NOT EXCEED 90M.

23. THESE DRAWINGS ARE FOR TENDER PURPOSE AND SHALL NOT BE USED FOR CONSTRUCTION.

REFFRENCE DRAWINGS	REV NO.	DATE	DESCRIPTION	BY	CKD.	APPR.

PROGRAM MANAGEMENT UNIT, PUNJAB INTERMEDIATE CITIES IMPROVEMENT INVESTMENT PROGRAM (PICIIP), LOCAL GOVERNMENT AND COMMUNITY DEVELOPMENT (LG & CD) DEPARTMENT, PUNJAB)

CONSULTING SERVICES FOR ENGINEERING, PROCUREMENT AND CONSTRUCTION MANAGEMENT (EPCM) CONSULTANT.

COVERED PARKING SHEDS AT FREED TOWN, SAHIWAL
IP BASED VIDEO SURVEILLANCE SYSTEM

NESPAK

DESN. NESPAK	RECOMMENDED	VER./CKD.	APPROVED
DWN. MUBASHAR AHMAD			
FILE			
CKD.			
SUBM.	DATE SEP. 2020	DRAWING NO. 3976/166/TD/ISO01	REV. 0

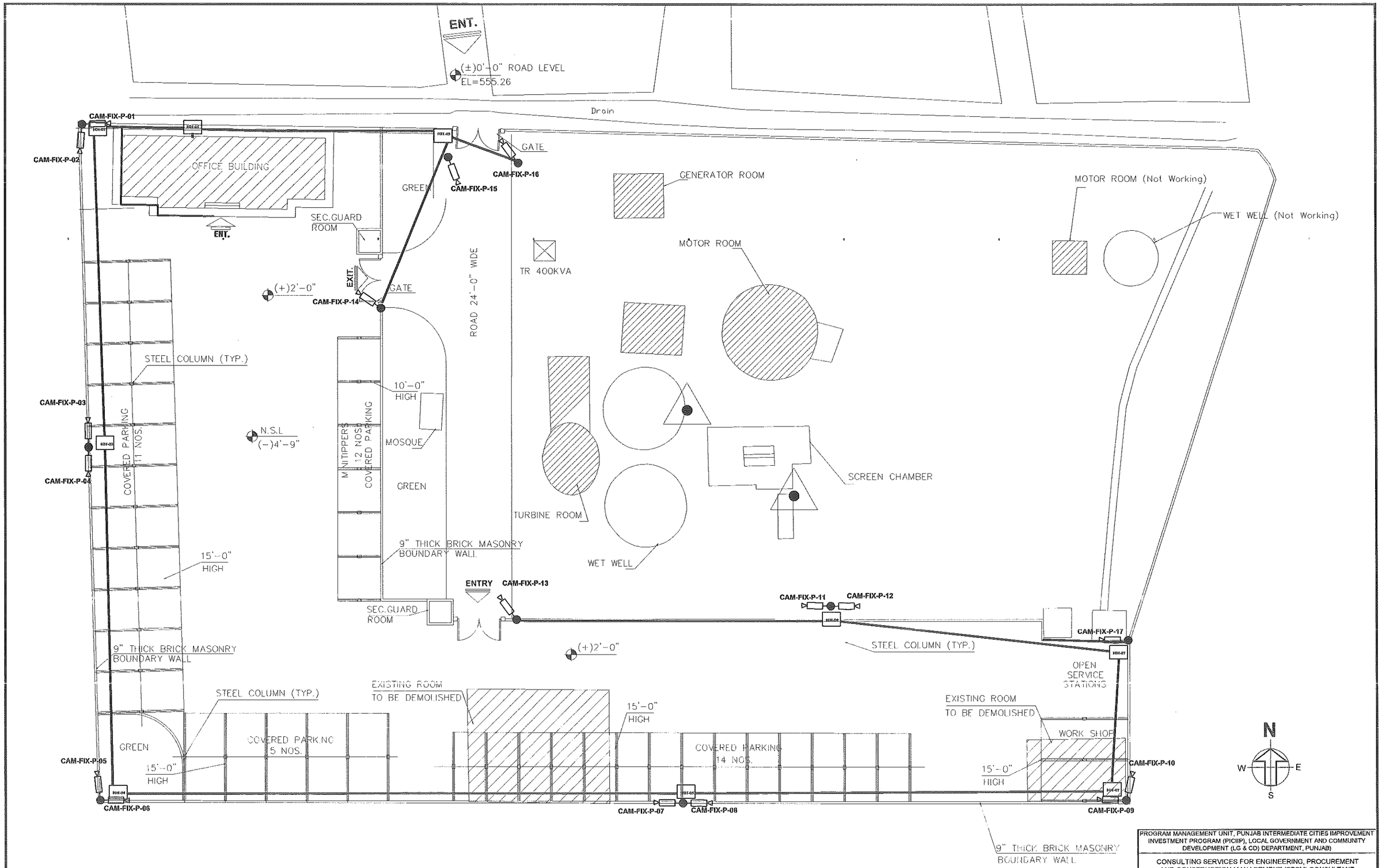

LEGEND

FIX CAMERA WITH POLE

DUCT

Hand Hole HH-XX

REFERENCE DRAWINGS	REV NO.	DATE	DESCRIPTION	BY	CKD.	APPR.
	05	28-08-2020	AS SHOWN	Dilshar		

PROGRAM MANAGEMENT UNIT, PUNJAB INTERMEDIATE CITIES IMPROVEMENT INVESTMENT PROGRAM (PICIIP), LOCAL GOVERNMENT AND COMMUNITY DEVELOPMENT (LG & CD) DEPARTMENT, PUNJAB)

CONSULTING SERVICES FOR ENGINEERING, PROCUREMENT AND CONSTRUCTION MANAGEMENT (EPCM) CONSULTANT.

COVERED PARKING SHEDS AT FREED TOWN, SAHIWAL
IP BASED VIDEO SURVEILLANCE SYSTEM

NESPAK

DESN. NESPAK	RECOMMENDED	VER./CKD.	APPROVED
DWN.			
FILE			
CKD.			
SUBM.			

DATE	DRAWING NO.	REV.
SEP. 2020	3979/155/AD/5002	05

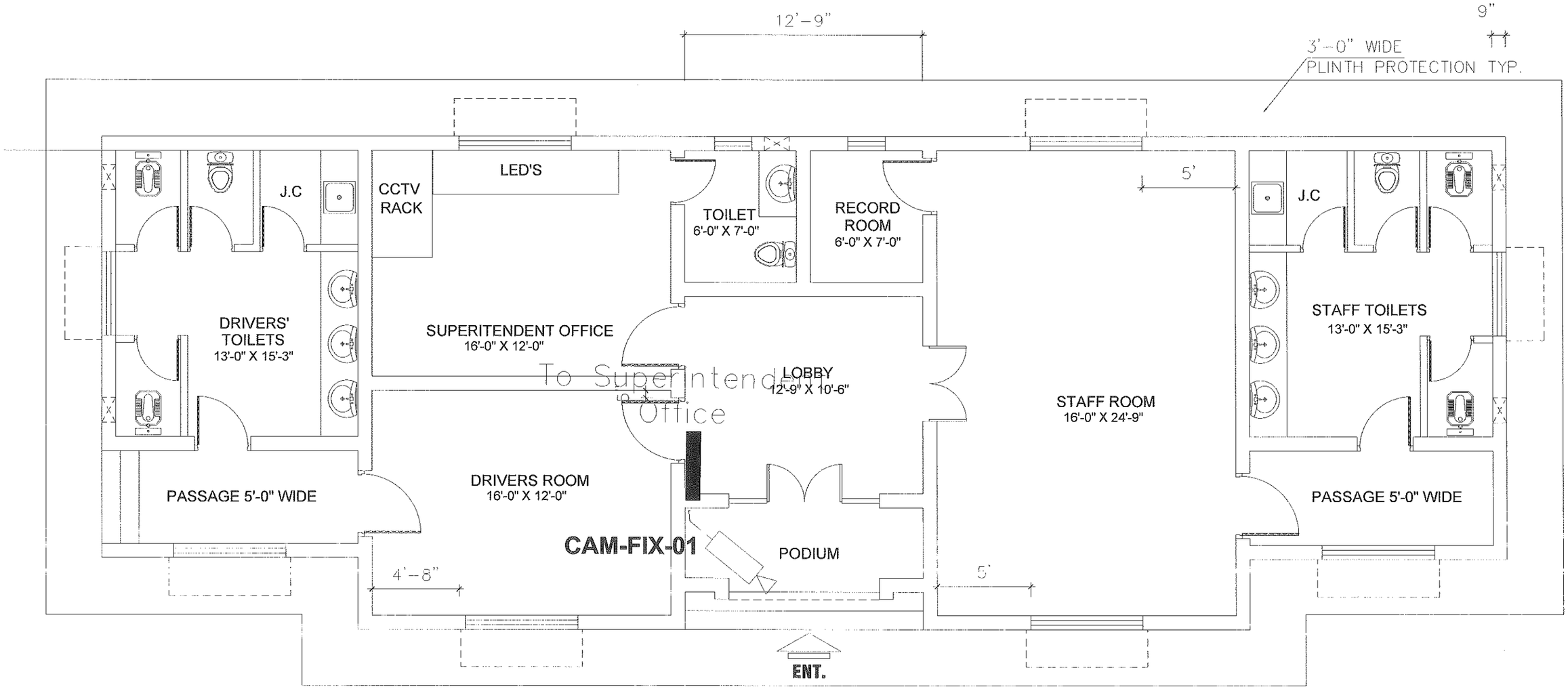

LEGEND

FIX CAMERA WITH POLE

DUCT

Hand Hole HH-XX

REFERENCE DRAWINGS	REV NO.	DATE	DESCRIPTION	BY	CKD.	APPR.

PROGRAM MANAGEMENT UNIT, PUNJAB INTERMEDIATE CITIES IMPROVEMENT INVESTMENT PROGRAM (PICIIP), LOCAL GOVERNMENT AND COMMUNITY DEVELOPMENT (LG & CD) DEPARTMENT, PUNJAB)

CONSULTING SERVICES FOR ENGINEERING, PROCUREMENT AND CONSTRUCTION MANAGEMENT (EPCM) CONSULTANT.

COVERED PARKING SHEDS AT FREED TOWN, SAHIWAL
OFFICE BUILDING

NESPAK

DESN. NESPAK	RECOMMENDED	VER./CKD.	APPROVED
DWN. MUBASHAR AHMAD			
FILE			
CKD.			
SUBM.			

DATE	DRAWING NO.	REV.
SEP. 2020	3976/166/TD/S003	0

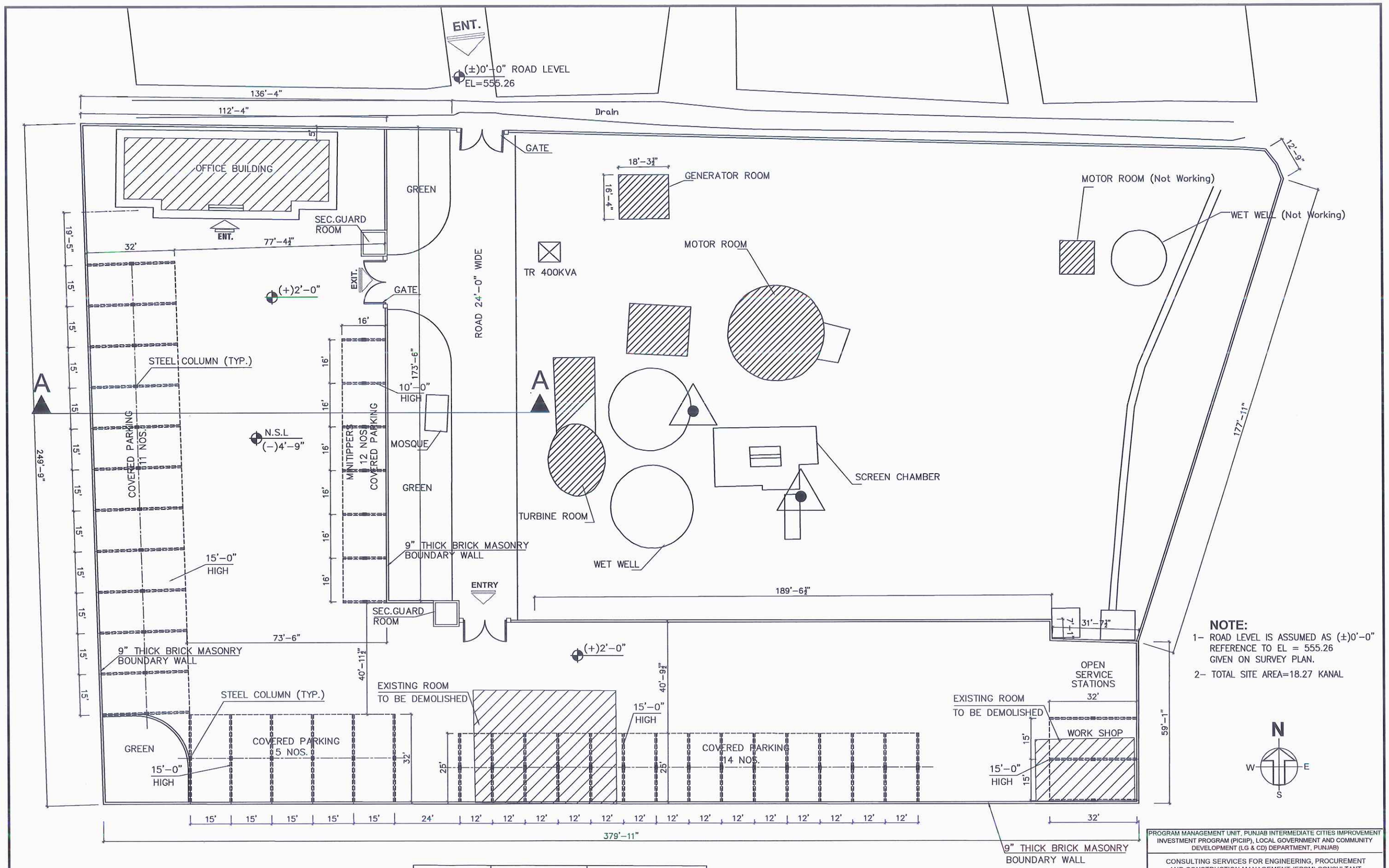

NOTE:

1- ROAD LEVEL IS ASSUMED AS (±)0'-0" REFERENCE TO EL = 555.26 GIVEN ON SURVEY PLAN.

2- TOTAL SITE AREA=18.27 KANAL

SHED SIZE	NO.OF SHEDS	NO.OF VEHICLES
15'x32'	16 NOS.	16 NOS.
12'x25'	14 NOS.	14 NOS.
16'x16'	06 NOS.	12 NOS.
TOTAL NOS. OF VEHICLES = 42 NOS.		

REFERENCE DRAWINGS	REV NO.	DATE	DESCRIPTION	BY	CKD.	APPR.

PROGRAM MANAGEMENT UNIT, PUNJAB INTERMEDIATE CITIES IMPROVEMENT INVESTMENT PROGRAM (PICIIP), LOCAL GOVERNMENT AND COMMUNITY DEVELOPMENT (LG & CD) DEPARTMENT, PUNJAB)

CONSULTING SERVICES FOR ENGINEERING, PROCUREMENT AND CONSTRUCTION MANAGEMENT (EPCM) CONSULTANT.

COVERED PARKING SHEDS AT FREED TOWN, SAHIWAL

PLAN OF TYPICAL X-SECTION

NESPAK

DESN. NESPAK	RECOMMENDED	VER./CKD.	APPROVED
DWN. ASHFAQ NAZ			
FILE	DATE AUGUST, 2020	DRAWING NO. 3976/102/PC-1/XS01	REV. 00
CKD.			
SUBM.			

NAZ D:\INTERMEDIATE CITIES\SAHIWAL\X-SECTION\PLAN OF X-SEC COPY.dwg 29/01/2021

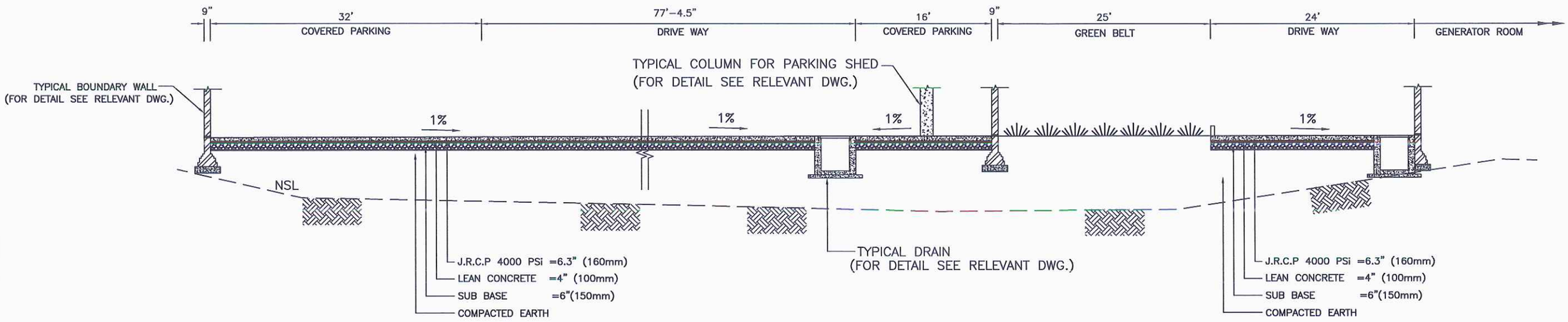

SECTION A–A

NOTES:–

1. ALL DIMENSIONS ARE IN FEET AND INCHES UNLESS OTHER WISE NOTED.
2. SUBGRADE/EMBANKMENT SHALL CONSIST OF SUITABLE MATERIAL HAVING MINIMUM SOAKED CBR OF 7% AT 95% MDD.

REFERENCE DRAWINGS	REV NO.	DATE	DESCRIPTION	CKD.	APPR.

PROGRAM MANAGEMENT UNIT, PUNJAB INTERMEDIATE CITIES IMPROVEMENT INVESTMENT PROGRAM (PICIIP), LOCAL GOVERNMENT AND COMMUNITY DEVELOPMENT (LG & CD) DEPARTMENT, PUNJAB)

CONSULTING SERVICES FOR ENGINEERING, PROCUREMENT AND CONSTRUCTION MANAGEMENT (EPCM) CONSULTANT.

COVERED PARKING SHEDS AT FREED TOWN, SAHIWAL
OFFICE BUILDING
TYPICAL CROSS SECTIONS

NESPAK

DESN. NESPAK
DWN. ASHFAQ NAZ
FILE
CKD.
SUBM.

RECOMMENDED | VER./CKD. | APPROVED

DATE: JULY 2020
DRAWING NO.: 3976/102/PC–1/XS02
REV.: 0

NAZ, D:\INTERMEDIATE CITIES\SAHIWAL\X–SECTION\XS–001.dwg, 03/09/2020

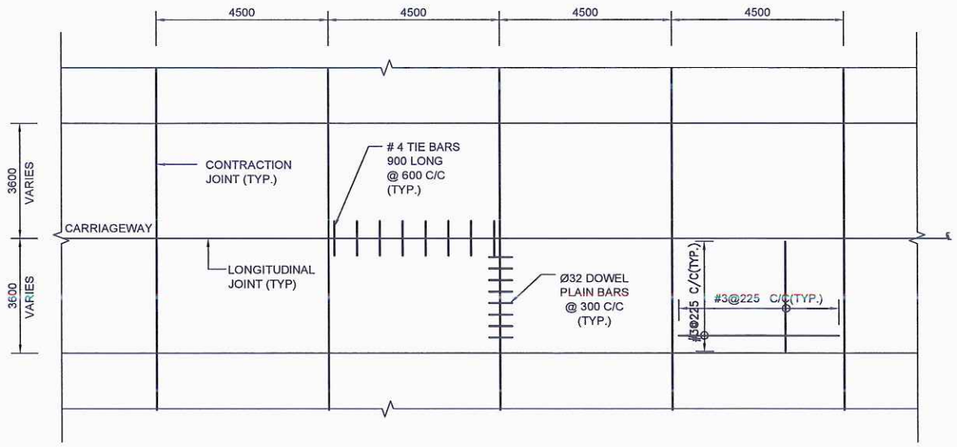

PLAN

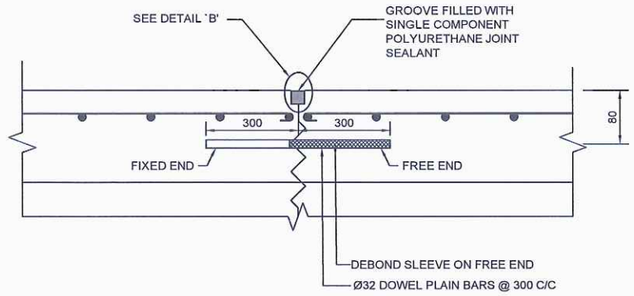

TYPICAL CONTRACTION JOINT

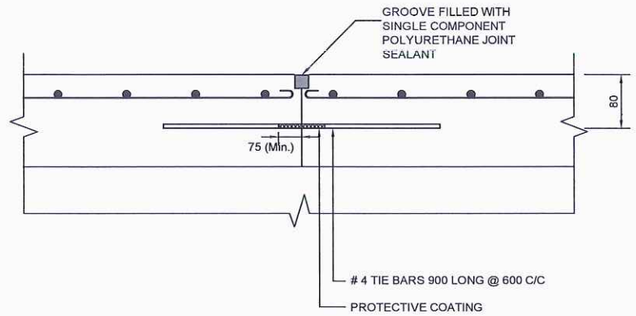

TYPICAL LONGITUDINAL JOINT

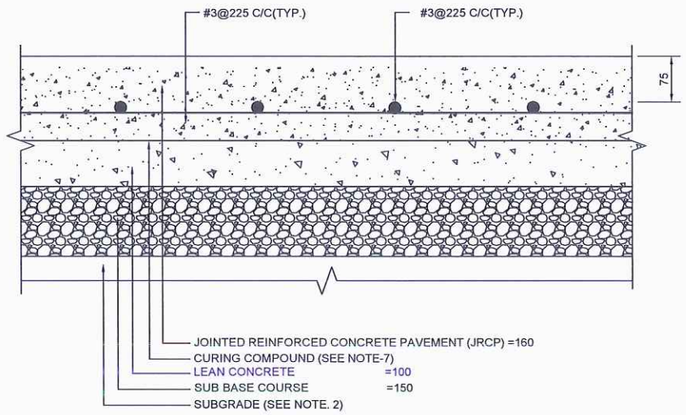

DETAIL `A'

NOTE:

1. ALL DIMENSIONS ARE IN MILLIMETERS UNLESS SPECIFIED OTHERWISE.
2. SUBGRADE SHALL HAVE A MINIMUM SOAKED CBR OF 7% AT 95% MDD.
3. RIGID PAVEMENT SHALL BE PAVED WITH CONCRETE PAVER UNLESS APPROVED OTHERWISE BY THE ENGINEER.
4. REINFORCEMENT STEEL SHALL BE GRADE 60.
5. CONCRETE COMPRESSIVE STRENGTH (CYLINDER) SHALL BE 4000 psi.
6. CURING COMPOUND SHALL CONSIST OF TWO COATS OF WHITE-PIGMENTED WAX-BASED COMPOUND (ASTMC309).
7. THE REINFORCED MESH SHALL BE KEPT IN PLACE TO CONTROL SURFACE CRACKING.THE MESH SHALL NOT BE SUNK IN CONCRETE.
8. FOR DETAILS REFER RELEVANT DRAWINGS.

REFERENCE DRAWINGS	REV NO.	DATE	DESCRIPTION	BY	CKD.	APPR.

PROGRAM MANAGEMENT UNIT, PUNJAB INTERMEDIATE CITIES IMPROVEMENT INVESTMENT PROGRAM (PICIIP), LOCAL GOVERNMENT AND COMMUNITY DEVELOPMENT (LG & CD) DEPARTMENT, PUNJAB)

CONSULTING SERVICES FOR ENGINEERING, PROCUREMENT AND CONSTRUCTION MANAGEMENT (EPCM) CONSULTANT.

COVERED PARKING SHEDS AT FREED TOWN, SAHIWAL
TYPICAL JOINTED REINFORCED CONCRETE PAVEMENT DETAIL

NESPAK

DESN. NESPAK	RECOMMENDED	VER./CKD.	APPROVED
DWN. ASHFAQ NAZ			
FILE	DATE	DRAWING NO.	REV.
CKD.			
SUBM.	AUGUST, 2020	3976/102/PC-1/XS02A	00

NAZ D:\INTERMEDIATE CITIES\SAHIWAL\X-SECTION\Rigid Pavement-1.dwg 29/01/2021

WATER SUPPLY

LEGEND:

WATER SUPPLY PIPE	
COLD WATER PIPE (C.W)	
HOT WATER PIPE (H.W)	
INSTA GEYSER	I.G
L.L.D.P.E WATER TANK (LINEAR LOW DENSITY POLYETHYLENE)	

NOTES:

1. ALL PIPE DIAMETERS ARE IN MILLIMETERS UNLESS OTHERWISE INDICATED.
2. THIS DRAWING IS TO BE READ IN CONJUNCTION WITH ALL OTHER RELEVANT DRAWINGS.
3. ALL COLD AND HOT WATER PIPES SHALL BE OF PPR (POLY PROPYLENE RANDOM) CLASS PN-20 DN 8077-8078 UNLESS OTHERWISE INDICATED.
4. ALL WATER SUPPLY FITTINGS SUCH AS BENDS, TEES, SOCKETS, SHALL BE OF PPR PN 25, DN 16962 UNLESS OTHERWISE MENTIONED.
5. STOP COCK / GATE VALVE SHALL BE INSTALLED AT ALL PIPES ENTERING THE WALL OR AS DIRECTED BY SITE ENGINEER.
6. CONNECTION TO EACH FIXTURE UNIT SHALL BE OF 25Ø.
7. ALL PIPES HAVE BEEN INDICATED BY OUTER DIAMETERS.
8. ALL WATER SUPPLY PIPES ARE BURRIED PIPES.
9. ALL POLYETHYLENE PIPES SHALL BE OF CLASS (PN- 10,PE-100)

OUTER DIA (mm)	INNER DIA (INCHES)
25	3/4"
32	1"
40	1¼"
50	1½"
63	2"
75	2½"
90	3"
110	4"

9. FOR PPR PIPES, EQUIVALENT INSIDE DIAMETERS IN INCHES SHALL BE AS UNDER

OUTER DIA (mm)	INNER DIA (INCHES)
25 mm	1/2"
32 mm	3/4"
40 mm	1"
50 mm	1¼"
63 mm	1½"
75 mm	2"
90 mm	2½"

SEWERAGE

LEGEND:

WASTE PIPE	
SOIL PIPE	
SEWER PIPE	
GULLY TRAP (1'x1')	GT
MANHOLE (2'-6"x2'x6")	MH
FLOOR TRAP	
VENT PIPE	

NOTES:

1. ALL PIPE DIAMETERS ARE IN INCHES UNLESS OTHERWISE INDICATED.
2. THIS DRAWING IS TO BE READ IN CONJUNCTION WITH ALL OTHER RELEVANT DRAWINGS.
3. MINIMUM SLOPE FOR SEWER LINE
   3"Ø = 0.014
   4"Ø = 0.010
   6"Ø = 0.007
   8"Ø = 0.005
   10"Ø = 0.004
   12"Ø = 0.0031
4. 0.2% SLOPE WILL BE PROVIDED FOR ROOF DRAINAGE.
5. ALL SOIL, WASTE, VENT AND RAINWATER PIPES ARE uPVC ISO 3633 & EN 1329.
6. ALL SEWAGE PIPING FROM MANHOLES AND GULLY TRAPS ONWARD SHALL BE OF uPVC OF CLASS SN-8 (EN-1401)
7. THE CONTRACTOR SHALL CONFIRM THE INVERT LEVEL OF SEWER PIPE FROM THE SEPTIC TANK UP TO EXTERNAL MANHOLE OF THE EXISTING SEWERAGE SYSTEM BEFORE CONNECTING THE SEWER IN THE MANHOLE.

REFERENCE DRAWINGS	REV.NO.	DATE	DESCRIPTION	BY	CKD	APPR

PROGRAM MANAGEMENT UNIT, PUNJAB INTERMEDIATE CITIES IMPROVEMENT INVESTMENT PROGRAM (PICIIP), LOCAL GOVERNMENT AND COMMUNITY DEVELOPMENT (LG & CD) DEPARTMENT, PUNJAB)

CONSULTING SERVICES FOR ENGINEERING, PROCUREMENT AND CONSTRUCTION MANAGEMENT (EPCM) CONSULTANT.

COVERED PARKING SHEDS AT FREED TOWN, SAHIWAL
OFFICE BUILDING
LEGEND AND NOTES

NESPAK

DESN. NESPAK	RECOMMENDED	VERI.CKD.	APPROVED
DWN. MUHAMMAD SALEEM			
FILE	DATE	DRAWING NO.	REV.
CKD.	AUG, 2020	3976/11/TD/4J00	0
SUBM.			

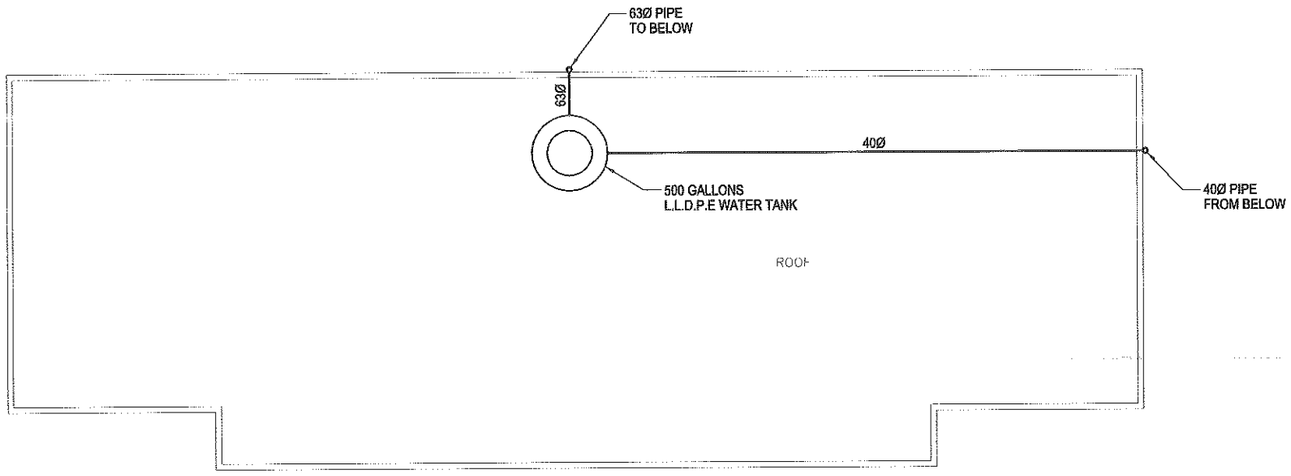

ROOF PLAN

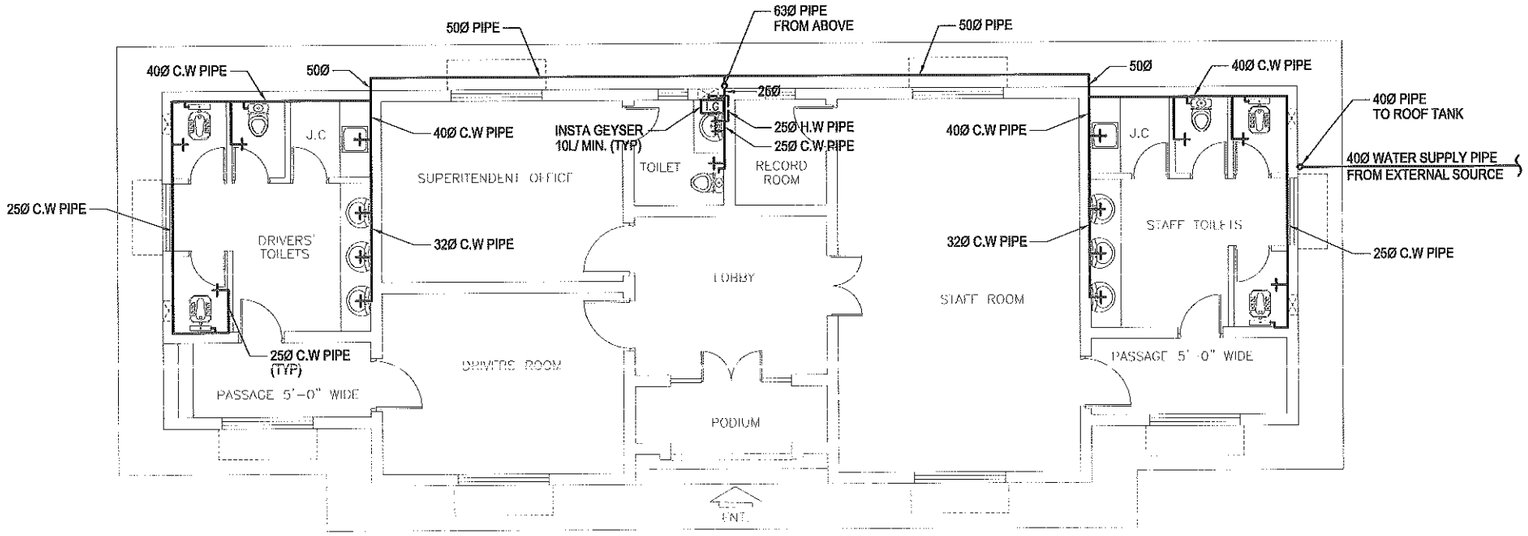

GROUND FLOOR PLAN

NOTE:

FOR LEGEND AND NOTES REFER DRAWING NO. 3976/11/C/4J00

SCALE 1"=10'

PROGRAM MANAGEMENT UNIT, PUNJAB INTERMEDIATE CITIES IMPROVEMENT INVESTMENT PROGRAM (PICIIP), LOCAL GOVERNMENT AND COMMUNITY DEVELOPMENT (LG & CD) DEPARTMENT, PUNJAB)

CONSULTING SERVICES FOR ENGINEERING, PROCUREMENT AND CONSTRUCTION MANAGEMENT (EPCM) CONSULTANT.

COVERED PARKING SHEDS AT FREED TOWN, SAHIWAL
OFFICE BUILDING
WATER SUPPLY SYSTEM

NESPAK

DESN. NESPAK DWN. MUHAMMAD SALEEM FILE CKD. SUBM.	RECOMMENDED	VER.CKD.	APPROVED
	DATE AUG, 2020	DRAWING NO. 3976/11/TD/4J01	REV. 0

REFERENCE DRAWINGS	REV.NO.	DATE	DESCRIPTION	BY	CKD	APPR

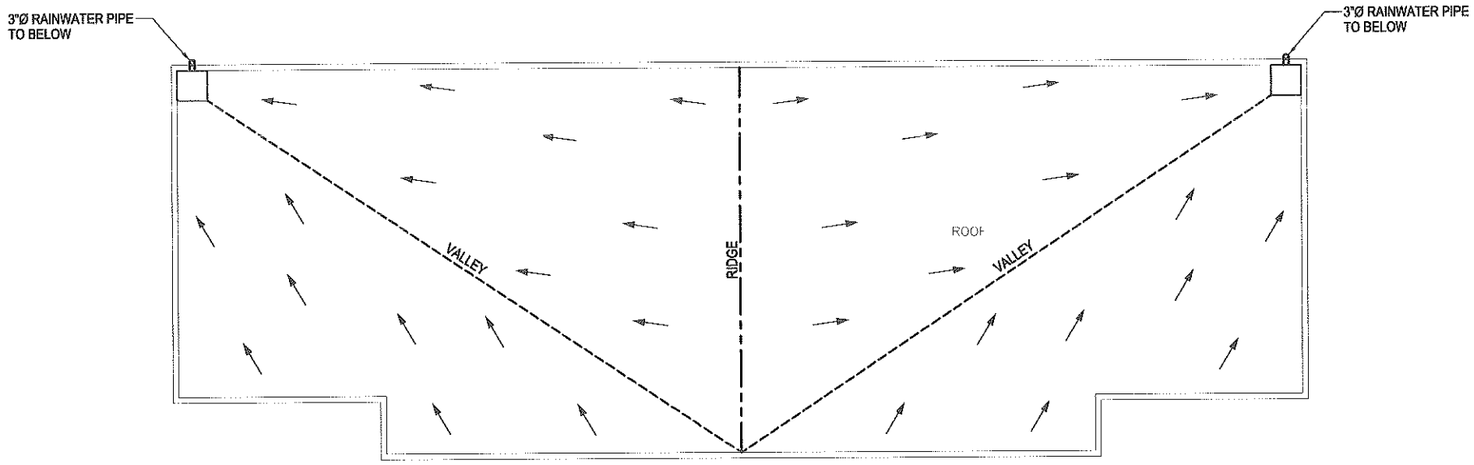

ROOF PLAN

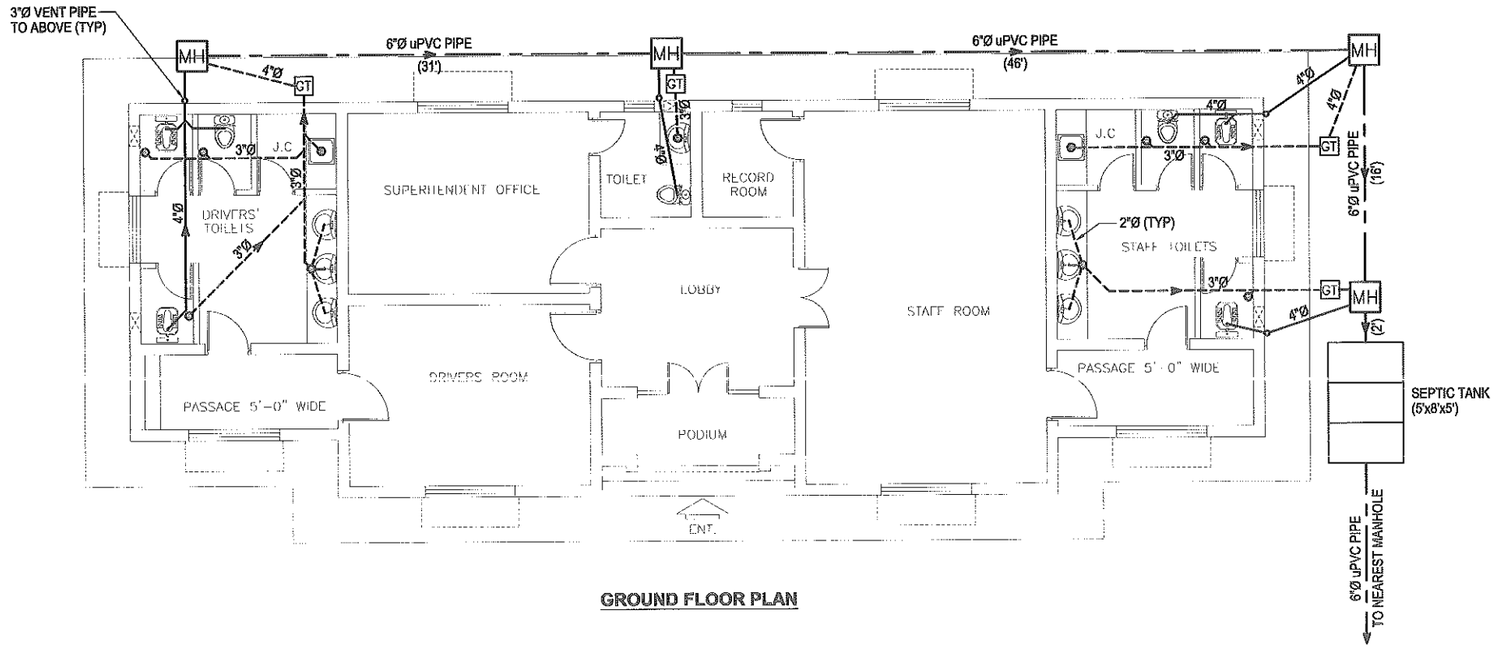

GROUND FLOOR PLAN

NOTE:

FOR LEGEND AND NOTES REFER DRAWING NO. 3976/11/C/4J00

SCALE 1"=10'

PROGRAM MANAGEMENT UNIT, PUNJAB INTERMEDIATE CITIES IMPROVEMENT INVESTMENT PROGRAM (PICIIP), LOCAL GOVERNMENT AND COMMUNITY DEVELOPMENT (LG & CD) DEPARTMENT, PUNJAB)

CONSULTING SERVICES FOR ENGINEERING, PROCUREMENT AND CONSTRUCTION MANAGEMENT (EPCM) CONSULTANT.

COVERED PARKING SHEDS AT FREED TOWN, SAHIWAL
OFFICE BUILDING
SEWERAGE SYSTEM

NESPAK

DESN. NESPAK	RECOMMENDED	VER./CKD.	APPROVED		
DWN. MUHAMMAD SALEEM					
FILE	DATE	DRAWING NO.		REV.	
CKD.	AUG, 2020	3976/11/TD/4J02		0	
SUBM.					

REFERENCE DRAWINGS	REV.NO.	DATE	DESCRIPTION	BY	CKD	APPR

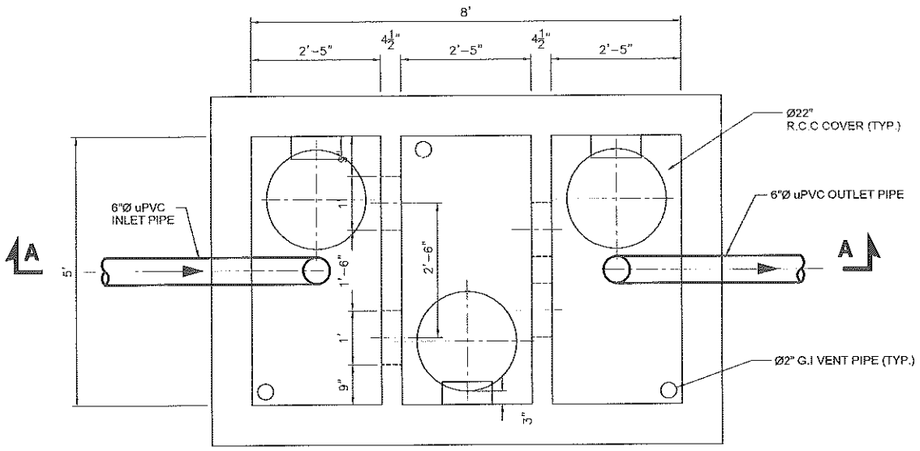

PLAN

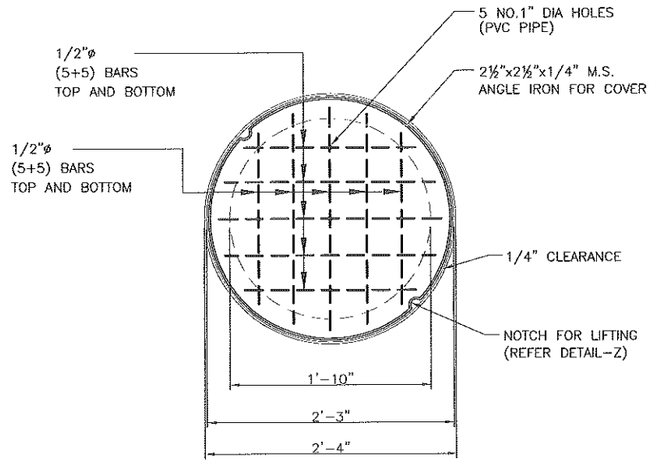

PLAN OF MANHOLE COVER
560mm (22") DIA
DETAIL-W

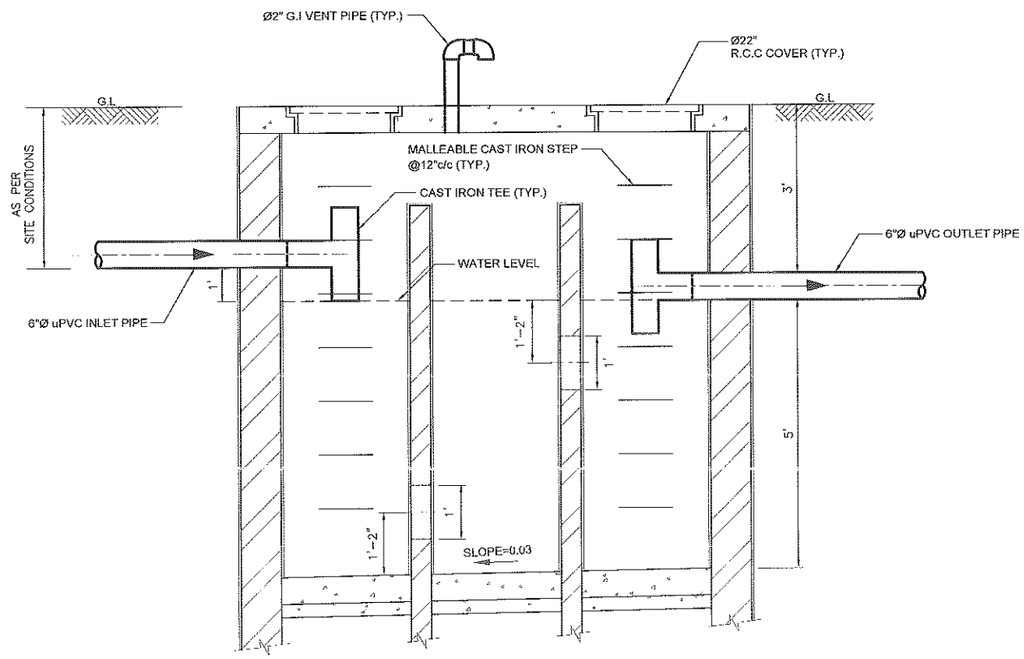

SECTION A-A

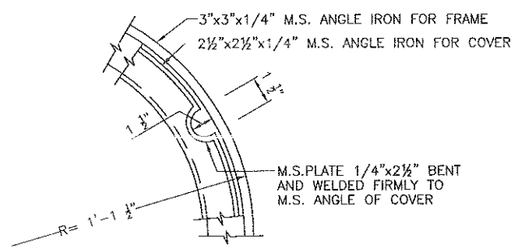

DETAIL-Z

NOTES

1- ALL DIMENSIONS ARE IN FEET/INCHES UNLESS OTHERWISE STATED.

2- THIS DRAWING IS TO BE READ IN CONJUNCTION WITH ALL OTHER RELEVANT DRAWINGS.

3- FOR STRUCTURAL DESIGN/STRUCTURE MATERIAL OF SEPTIC TANK REFER STRUCTURAL DRAWINGS.

REFERENCE DRAWINGS	REV.NO.	DATE	DESCRIPTION	BY	CKD	APPR

PROGRAM MANAGEMENT UNIT, PUNJAB INTERMEDIATE CITIES IMPROVEMENT INVESTMENT PROGRAM (PICIIP), LOCAL GOVERNMENT AND COMMUNITY DEVELOPMENT (LG & CD) DEPARTMENT, PUNJAB)

CONSULTING SERVICES FOR ENGINEERING, PROCUREMENT AND CONSTRUCTION MANAGEMENT (EPCM) CONSULTANT.

COVERED PARKING SHEDS AT FREED TOWN, SAHIWAL
OFFICE BUILDING
SEPTIC TANK

NESPAK

DESN. NESPAK	RECOMMENDED	VER.CKD.	APPROVED
DWN. MUHAMMAD SALEEM			
FILE	DATE	DRAWING NO.	REV.
CKD.	AUG, 2020	3976/11/TD/4.J03	0
SUBM.			

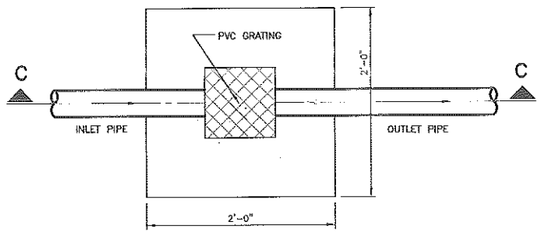

PLAN
GULLY TRAP

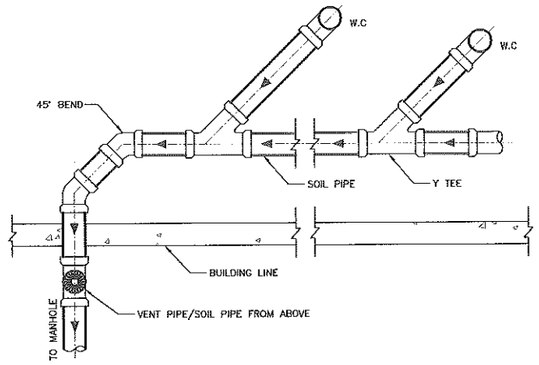

PLAN
DETAIL OF W.C IN SERIES

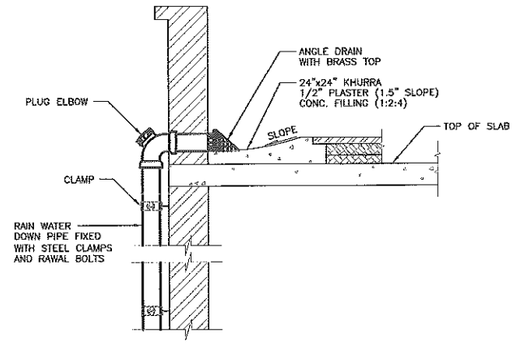

KHURRA DETAIL
WITH RAIN WATER PIPE IN DUCT

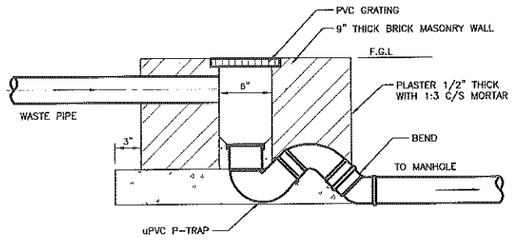

SECTION C-C
GULLY TRAP

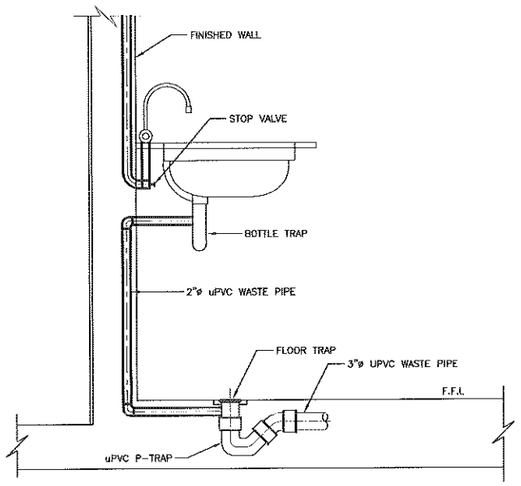

DETAIL OF BASIN CONNECTION
WITH FLOOR TRAP

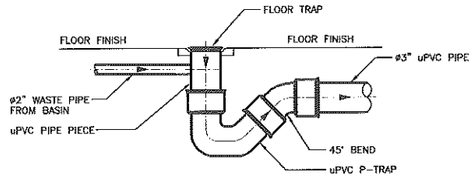

FLOOR DRAIN WITH P-TRAP

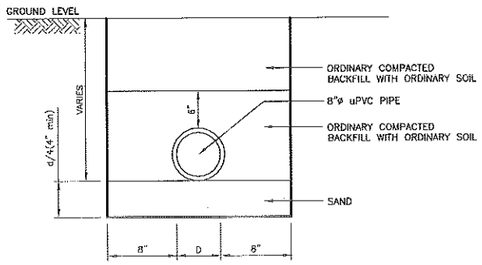

BEDDING FOR LAYING
UPVC PIPE

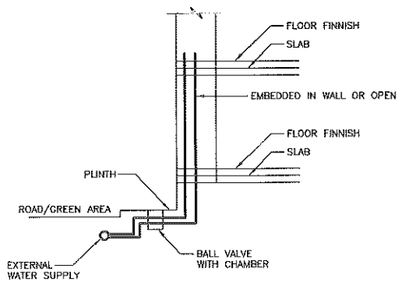

TYPICAL SECTION
WATER PIPES FOR BUILDING

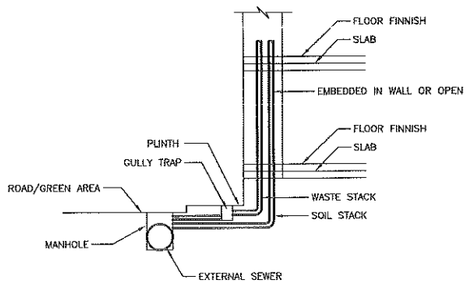

TYPICAL SECTION
DRAINAGE PIPES FROM BUILDING TO SEWER

REFERENCE DRAWINGS	REV.NO.	DATE	DESCRIPTION	BY	CKD	APPR

PROGRAM MANAGEMENT UNIT, PUNJAB INTERMEDIATE CITIES IMPROVEMENT INVESTMENT PROGRAM (PICIIP), LOCAL GOVERNMENT AND COMMUNITY DEVELOPMENT (LG & CD) DEPARTMENT, PUNJAB)

CONSULTING SERVICES FOR ENGINEERING, PROCUREMENT AND CONSTRUCTION MANAGEMENT (EPCM) CONSULTANT.

COVERED PARKING SHEDS AT FREED TOWN, SAHIWAL
OFFICE BUILDING
MISCELLANEOUS PLUMBING DETAILS

NESPAK

DESN. NESPAK	RECOMMENDED	OVER/CKD.	APPROVED
DWN. MUHAMMAD SALEEM			
FILE	DATE	DRAWING NO.	REV.
CKD.	AUG, 2020	3976/11/TD/4J04	0
SUBM.			

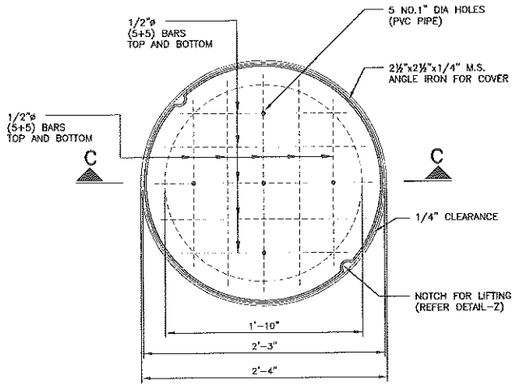

PLAN OF MANHOLE COVER
560mm (22") DIA
DETAIL-W

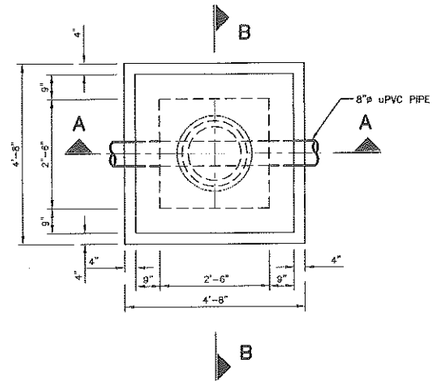

PLAN
MANHOLE

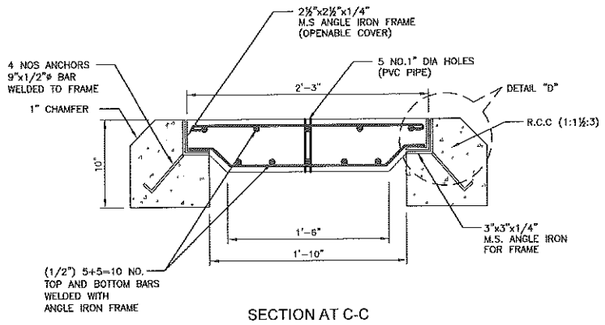

SECTION AT C-C

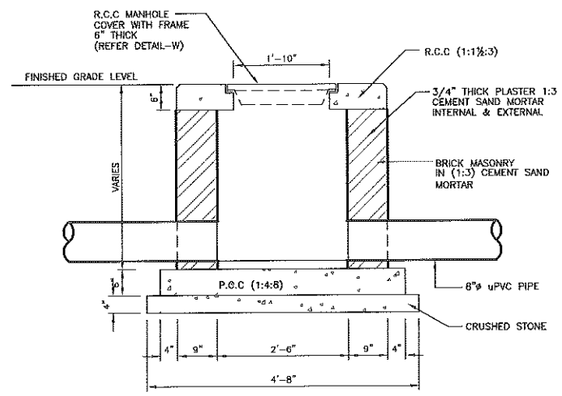

SECTION A-A
MANHOLE

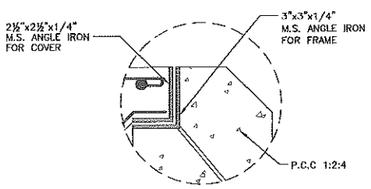

DETAIL "D"

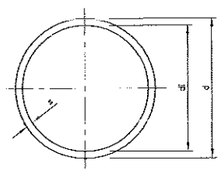

DIMENSIONAL DETAIL
OF PPR PIPE

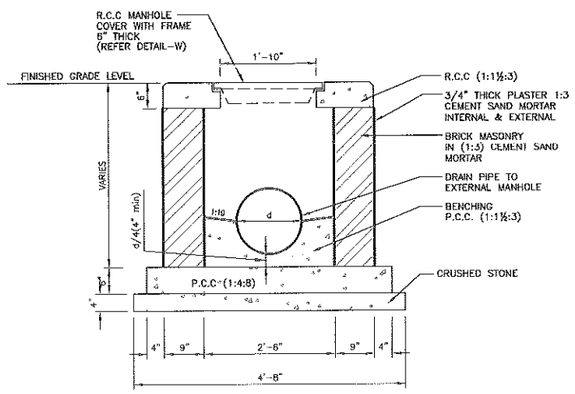

SECTION B-B
MANHOLE

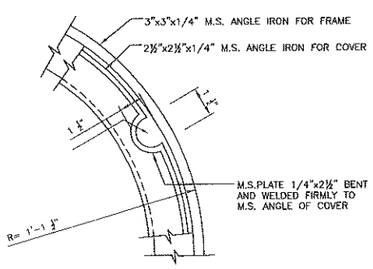

DETAIL-Z

CLAMP SPACES PN20

DIAMETER	CLAMP SPACING DISTANCES ACCORDING TO TEMPERATURE, CM					
mm	20°C	30°C	40°C	50°C	60°C	80°C
25	100	100	100	95	90	85
32	120	115	115	110	100	90
40	130	130	125	120	115	100
50	150	150	140	130	125	110
63	170	160	155	150	145	125
75	185	180	175	160	155	140

TABLE 1	FUSION DATA FOR PPR		
OUTER DIAMETER	AVERAGE HEATING TIME *	AVERAGE WORKING TIME (MAX.)	AVERAGE COOLING TIME (MIN.)
mm	sec	sec	sec
25	7	4	2
32	8	6	4
40	12	6	4
50	18	6	4
63	24	8	6
75	30	8	6
90	40	8	6
110	50	10	8

NOTE:

* AVERAGE HEATING TIME REFERS TO THE START TIME WHEN THE PIPE AND FITTING ARE INSERTED UP TO THE MARKED WELDING DEPTH IN THE WELDING MACHINE.

OUTER DIAMETER	WALL THICKNESS	INTERNAL DIAMETER	INTERNAL DIAMETER
d	S	di	di
mm	mm	mm	inches
25	4.2	16.6	1/2"
32	5.4	21.2	3/4"
40	6.7	26.6	1"
50	8.4	33.2	1¼"
63	10.5	42.0	1½"
75	12.5	50.0	2"
90	15.0	60.0	2½"
110	18.4	73.2	3"

CONCRETE EQUIVALENT STRENGTH CYLINDER	
(1:1½:3)	3000psi
(1:2:4)	2500psi
(1:4:8)	2000psi

NOTE:

ALL DIMENSIONS ARE IN INCHES/FEETS UNLESS OTHERWISE STATED.

REFERENCE DRAWINGS	REV.NO.	DATE	DESCRIPTION	BY	CKD	APPR

PROGRAM MANAGEMENT UNIT, PUNJAB INTERMEDIATE CITIES IMPROVEMENT INVESTMENT PROGRAM (PICIIP), LOCAL GOVERNMENT AND COMMUNITY DEVELOPMENT (LG & CD) DEPARTMENT, PUNJAB)

CONSULTING SERVICES FOR ENGINEERING, PROCUREMENT AND CONSTRUCTION MANAGEMENT (EPCM) CONSULTANT.

COVERED PARKING SHEDS AT FREED TOWN, SAHIWAL
OFFICE BUILDING
MISCELLANEOUS PLUMBING DETAILS

NESPAK

DESN. NESPAK	RECOMMENDED	VER./CKD.	APPROVED
DWN. MUHAMMAD SALEEM			
FILE	DATE	DRAWING NO.	REV.
CKD.	AUG, 2020	3976/11/TD/4J05	0
SUBM.			

LEGEND

STORM WATER DRAIN — D-1

STORM WATER FLOW DIRECTION

ABBREVIATIONS

G.L	GROUND LEVEL
B.L	BED LEVEL

NOTES

1. ALL DRAIN SIZES ARE IN FEET UNLESS OTHERWISE SPECIFIED.
2. M.S (HEAVY DUTY) REMOVABLE GRATING SHALL BE PROVIDED.
3. THE CONTRACTOR SHALL VERIFY THE INVERT LEVELS OF ALL THE STORM WATER DRAINS AS PER SITE CONDITION BEFORE CONSTRUCTION.
4. FOR STRUCTURAL DETAILS REFER TO STRUCTURAL DRAWINGS.
5. READ THIS DRAWING IN CONJUNCTION WITH ALL OTHER RELEVANT DRAWINGS.

REFERENCE DRAWINGS	REV NO.	DATE	DESCRIPTION	BY	CKD.	APPR.

PROGRAM MANAGEMENT UNIT, PUNJAB INTERMEDIATE CITIES IMPROVEMENT INVESTMENT PROGRAM (PICIIP), LOCAL GOVERNMENT AND COMMUNITY DEVELOPMENT (LG & CD) DEPARTMENT, PUNJAB)

CONSULTING SERVICES FOR ENGINEERING, PROCUREMENT AND CONSTRUCTION MANAGEMENT (EPCM) CONSULTANT.

COVERED PARKING SHEDS

STORM WATER DRAINAGE SYSTEM LEGEND & NOTES

NESPAK

DESN. NESPAK	RECOMMENDED	VER./CKD.	APPROVED
DWN. Yasir Vicker			
FILE	DATE	DRAWING NO.	REV
CKD.	AUGUST, 2020	3976/11/TD/3J00	0
SUBM.			

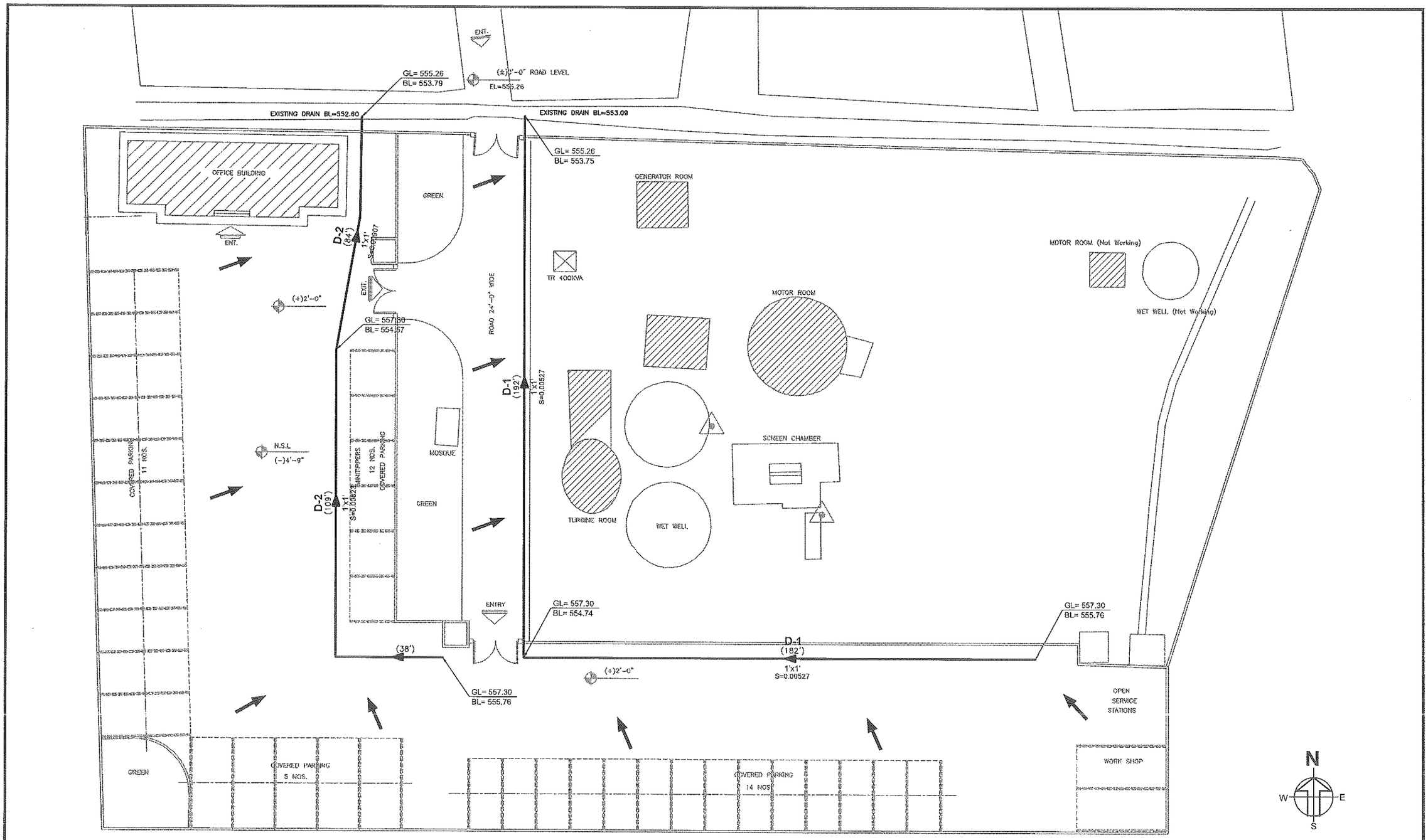

PROGRAM MANAGEMENT UNIT, PUNJAB INTERMEDIATE CITIES IMPROVEMENT INVESTMENT PROGRAM (PICIIP), LOCAL GOVERNMENT AND COMMUNITY DEVELOPMENT (LG & CD) DEPARTMENT, PUNJAB)

CONSULTING SERVICES FOR ENGINEERING, PROCUREMENT AND CONSTRUCTION MANAGEMENT (EPCM) CONSULTANT.

COVERED PARKING SHEDS AT FREED TOWN, SAHIWAL

STORM WATER DRAINAGE SYSTEM (LAYOUT PLAN AND LEVELS)

NESPAK

REFERENCE DRAWINGS	REV NO.	DATE	DESCRIPTION	BY	CKD.	APPR.

DESN. NESPAK	RECOMMENDED	VER./CKD.	APPROVED
DWN. Yasir Victor			
FILE	DATE	DRAWING NO.	REV.
CKD.	AUGUST, 2020	3976/11/TD/3J01	0
SUBM.			

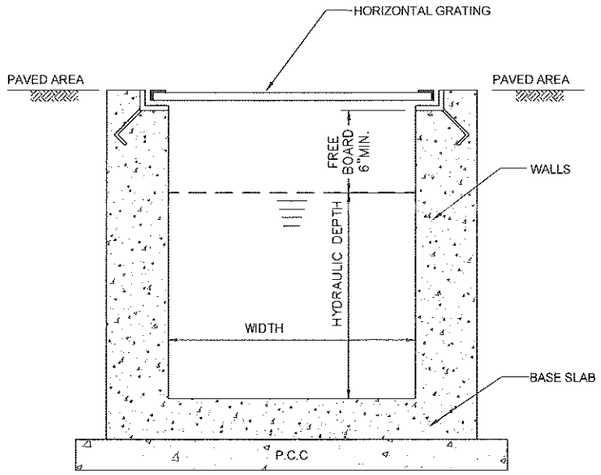

TYPICAL X-SECTION OF DRAIN
FOR HORIZONTAL GRATING

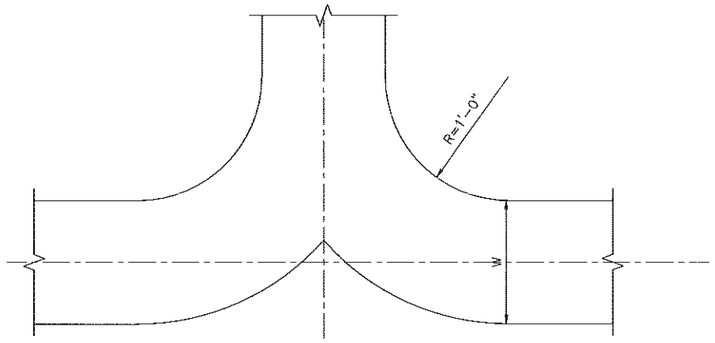

DRAIN JUNCTION DETAIL

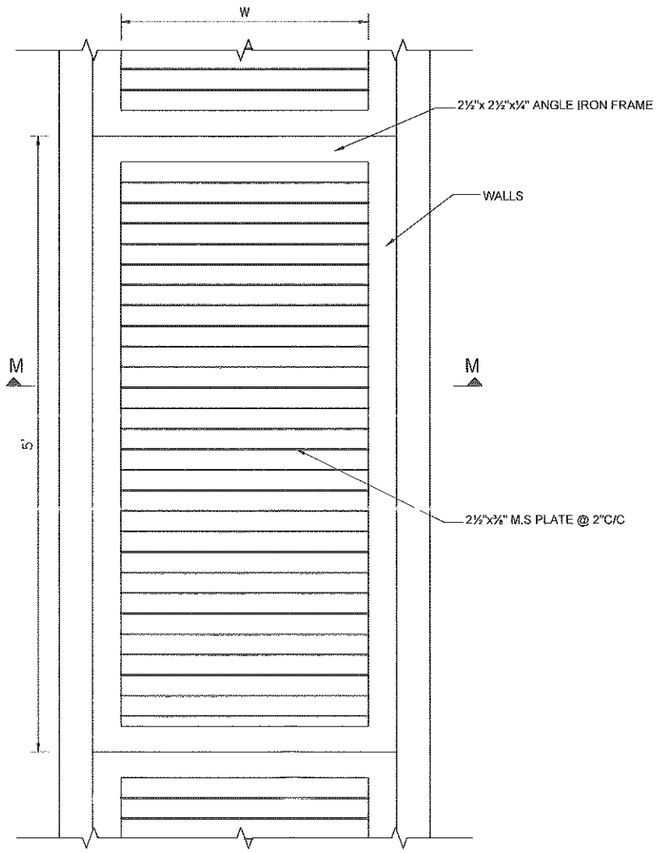

HORIZONTAL GRATING PLAN

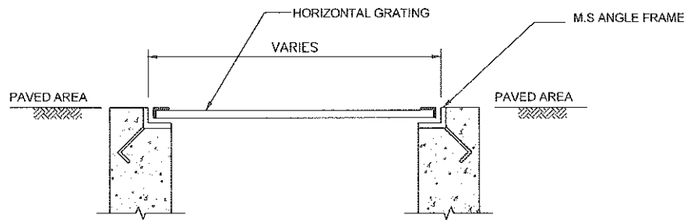

SECTION M-M

DRAIN SIZE	
WIDTH(ft)	DEPTH (ft)
1'-0"	1'-0"
1'-6"	1'-0"
1'-6"	1'-6"
2'-0"	1'-6"
2'-0"	2'-0"

REFERENCE DRAWINGS	REV NO.	DATE	DESCRIPTION	BY	CKD.	APPR.

PROGRAM MANAGEMENT UNIT, PUNJAB INTERMEDIATE CITIES IMPROVEMENT INVESTMENT PROGRAM (PICIIP), LOCAL GOVERNMENT AND COMMUNITY DEVELOPMENT (LG & CD) DEPARTMENT, PUNJAB)

CONSULTING SERVICES FOR ENGINEERING, PROCUREMENT AND CONSTRUCTION MANAGEMENT (EPCM) CONSULTANT.

COVERED PARKING SHEDS

MISCELLANEOUS DETAILS

NESPAK

DESN. NESPAK	RECOMMENDED	VER/CKD.	APPROVED
DWN. Yasir Victor			
FILE	DATE AUGUST 2020	DRAWING NO. 3976/11/TD/3J02	REV. 0
CKD.			
SUBM.			

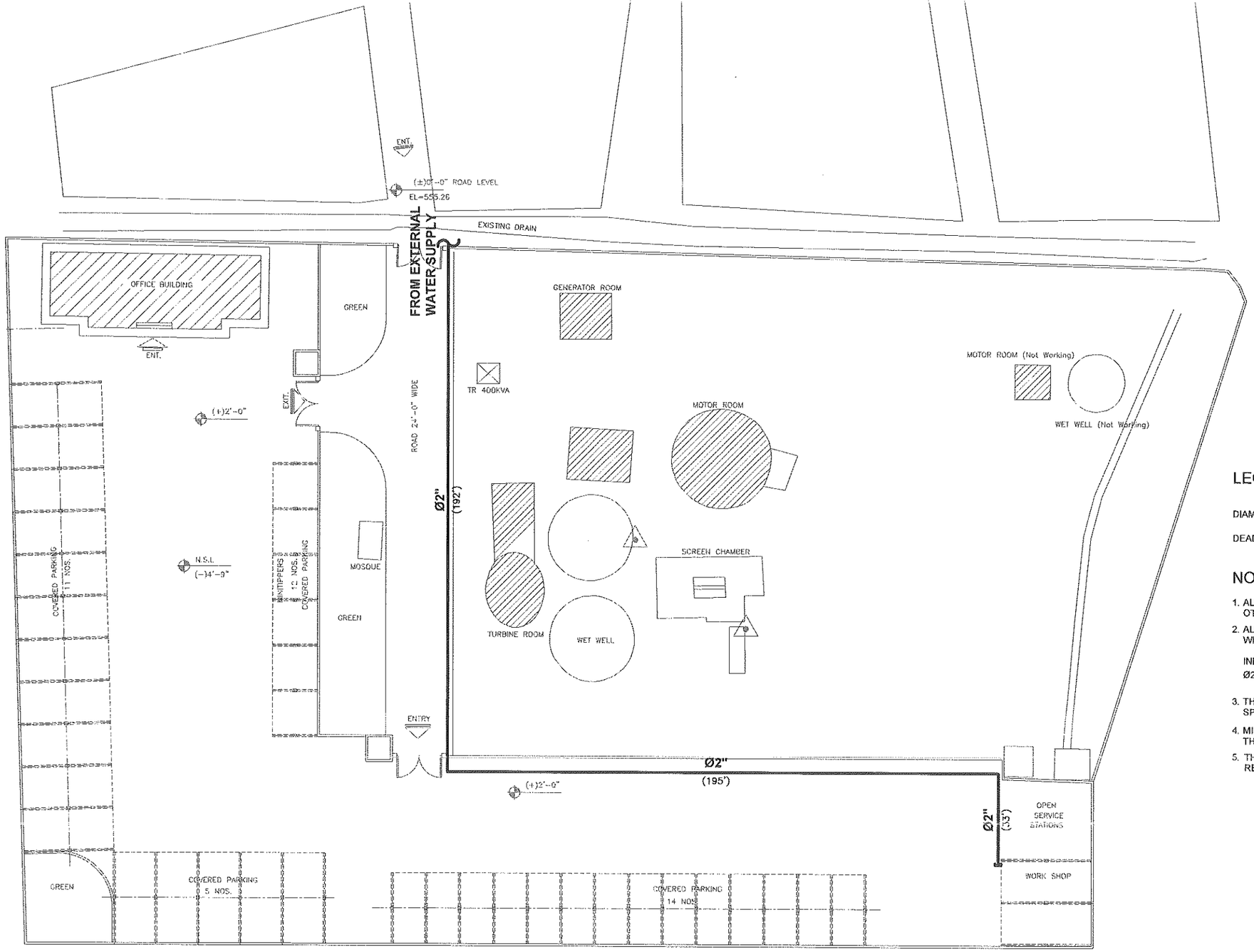

LEGEND

DIAMETER AND LENGTH OF PIPE	Ø2" / (120')
DEAD END	

NOTES

1. ALL PIPE DIAMETERS ARE IN INCHES AND LENGTHS ARE IN FEET UNLESS OTHERWISE SPECIFIED.
2. ALL PIPE DIAMETERS SHOWN ON DRAWINGS ARE INTERNAL DIAMETERS WHEREAS THE OUTER DIAMETERS ARE AS FOLLOWS:

INNER DIA (INCHES)	OUTER DIA (mm)
Ø2"	63

3. THE PIPE MATERIAL SHALL BE HDPE (PN-10, PE-100) UNLESS OTHERWISE SPECIFIED.
4. MINIMUM EARTH COVER OVER CROWN OF PIPE SHALL NOT BE LESS THAN 3'-0".
5. THIS DRAWING IS TO BE READ IN CONJUNCTION WITH ALL OTHER RELEVANT DRAWINGS.

N
W E
S

REFERENCE DRAWINGS	REV NO.	DATE	DESCRIPTION	BY	CKD.	APPR.

PROGRAM MANAGEMENT UNIT, PUNJAB INTERMEDIATE CITIES IMPROVEMENT INVESTMENT PROGRAM (PICIIP), LOCAL GOVERNMENT AND COMMUNITY DEVELOPMENT (LG & CD) DEPARTMENT, PUNJAB)

CONSULTING SERVICES FOR ENGINEERING, PROCUREMENT AND CONSTRUCTION MANAGEMENT (EPCM) CONSULTANT.

COVERED PARKING SHEDS AT FREED TOWN, SAHIWAL

WATER SUPPLY SYSTEM

NESPAK

DESN. NESPAK	RECOMMENDED	VER./CKD.	APPROVED
DWN. Yasir Victor			
FILE	DATE	DRAWING NO.	REV.
CKD.			
SUBM.	AUGUST, 2020	3976/11/TD/1J01	0

GENERAL NOTES

1. GENERAL

1– ALL LEVELS AND DIMENSIONS ARE IN FEET & INCHES UNLESS OTHERWISE NOTED.
2– ALL STRUCTURAL DRAWINGS SHALL BE READ IN CONJUNCTION WITH ARCHITECTURAL, PLUMBING/SEWERAGE, MECHANICAL, ELECTRICAL AND ANY OTHER RELEVANT DRAWING.
3– NOTES GIVEN ON THIS DRAWING ARE APPLICABLE TO ALL DRAWINGS UNLESS MENTIONED OTHERWISE. NOTES WRITTEN ON A DRAWING, SHALL BE APPLICABLE TO THAT PARTICULAR DRAWING ONLY UNLESS OTHERWISE CROSS-REFERRED.
4– ALL MATERIALS AND WORKMANSHIP SHALL CONFORM TO THE SPECIFICATIONS OF THE CONTRACT DOCUMENTS. IN THE ABSENCE OF ANY SPECIFICATIONS, ALL MATERIALS & WORKMANSHIP SHALL CONFORM TO THE RELEVANT ACI, BRITISH OR PAKISTANI CODES & STANDARDS AND SHALL BE SUBJECTED TO THE APPROVAL OF THE ENGINEER.
5– THE CONTRACTOR SHALL BE RESPONSIBLE FOR THE SAFETY OF THE STRUCTURES DURING CONSTRUCTION. HE SHALL ALSO VERIFY ALL DIMENSIONS AND LEVELS BEFORE EXECUTION OF WORK. ANY DISCREPANCY, ERROR OR OMISSION, IF FOUND, SHALL BE BROUGHT TO THE NOTICE OF THE ENGINEER FOR CORRECTION AND APPROVAL.
6– THE CONTRACTOR SHALL COORDINATE WITH ARCHITECTURAL AND VARIOUS SERVICE DRAWINGS FOR SIZES & LOCATION OF ALL STRUCTURAL MEMBERS, FLOORS, WALLS, OPENINGS, FLOOR FINISHES, PIPES etc.
7– THE CONTRACTOR SHALL BE RESPONSIBLE FOR THE EXECUTION OF DEWATERING SYSTEM WHERE SO REQUIRED DURING CONSTRUCTION.
8– TERMITE CONTROL TREATMENT SHALL BE CARRIED OUT AS PER SPECIFICATIONS.
9– DO NOT SCALE THE DRAWINGS. DIMENSIONS, GIVEN ON THE DRAWINGS, SHALL GOVERN.
10– ALL FABRICATION, PAINTING, ERECTION AND QUALITY CONTROL IS TO BE DONE IN ACCORDANCE WITH THE LATEST APPLICABLE ACI/AISC/BRITISH SPECIFICATIONS.
11– BACK FILLING AROUND FOUNDATIONS & WALLS SHALL BE DONE SIMULTANEOUSLY ON BOTH SIDES TO AVOID ANY LATERAL DISPLACEMENT. BACK FILLING UNDER FLOORS AND AROUND FOUNDATIONS SHALL BE DONE IN LAYERS NOT EXCEEDING 6 in. IN THICKNESS AND COMPACTED UPTO 95% MPD.
12– DEWATERING SHALL BE DONE BY CONTRACTOR IF REQUIRED WITH THE PRIOR APPROVAL OF THE ENGINEER.

2. FOUNDATIONS

1– FOUNDATIONS HAVE BEEN DESIGNED BASED ON NET ALLOWABLE BEARING CAPACITY AS SPECIFIED IN GEO-TECHNICAL INVESTIGATION REPORT.
2– IF SOFT/LOOSE POCKET OF SOIL OR LOOSE FILL MATERIAL IS ENCOUNTERED AT FOUNDATION BASE, IT SHOULD BECOMPLETELY EXCAVATED AND REPLACED WITH SELECT FILL MATERIAL. THE SELECT FILL SHOULD BE A-3 AS PER AASHTO SOIL CLASSIFICATIONS.THE SELECT FILL MATERIAL SHOULD BE REPLACED AND COMPACTED IN LAYERS OF THICKNESS APPROPRIATE TO TYPE AND SIZE OF COMPACTED EQUIPMENT TO AT LEAST 75% AT RELATIVE DENSITY OR 95% MODIFIED PROCTOR DRY DENSITY, AS APPROPRIATE. THE ON SITE SOIL AT FOUNDATION EXCAVATION BASE SHOULD BE PROOF ROLLED PRIOR TO THE PLACEMENT OF SELECT FILL/FOUNDATION.
3– ALL FOUNDATIONS SHALL BE PLACED ON COMPETENT LOAD BEARING STRATA. IF ACCEPTABLE BEARING STRATA IS NOT FOUND AT INDICATED DEPTHS OF FOUNDATION, THE ENGINEER SHALL BE NOTIFIED IN WRITING FOR HIS INSTRUCTIONS. ALL COLUMN FOOTING THAT MAY LIE IN THE FILL AREA SHOULD BE SUPPORTED ON THE NATURAL SOIL UNLESS OTHERWISE SHOWN ON THE DRAWINGS.
4– THE BED OF FOUNDATION SHALL BE THOROUGHLY COMPACTED PRIOR TO LAYING FOUNDATION. ANY LOOSE, WET, SOFT SOIL PATCH SHALL BE REPLACED WITH WELL-COMPACTED SELECTED GRANULAR FILL COMPACTED TO 95% MODIFIED AASHTO DENSITY.
5– THE FOUNDATION BED SOIL SHALL BE PROTECTED FROM INGRESS OF MOISTURE FROM ANY SOURCE BY PROVIDING ADEQUATE SURFACE DRAINAGE SYSTEM AND ENSURING LEAK PROOF JOINTING OF SEWERAGE AND WATER SUPPLY LINES. EXCESSIVE AND UNCONTROLLED WATERING FOR CURING AND COMPACTION OF BACK FILL MATERIAL SHALL BE AVOIDED.
6– ALL FOUNDATIONS SHALL BE PLACED ON COMPETENT LOAD BEARING STRATA. IF ACCEPTABLE BEARING STRATA IS NOT FOUND AT INDICATED DEPTHS OF FOUNDATION, THE ENGINEER SHALL BE NOTIFIED IN WRITING FOR HIS INSTRUCTIONS.
7– THE BED OF FOUNDATION SHALL BE THOROUGHLY COMPACTED PRIOR TO LAYING FOUNDATION. ANY LOOSE, WET, SOFT SOIL PATCH SHALL BE REPLACED WITH WELL-COMPACTED SELECT GRANULAR FILL COMPACTED TO 95% MODIFIED AASHTO DENSITY OR AS RECOMMENDED BY THE GEOTECHNICAL ENGINEER.

3. CONCRETE

3.1 STRENGTH

1– STRUCTURAL DESIGN IS BASED ON THE AMERICAN CONCRETE INSTITUTE CODE OF REINFORCED CONCRETE, ACI 318 AND UNIFORM BUILDING CODE.
2– ALL STRUCTURAL CONCRETE SHALL CONFORM TO AMERICAN CONCRETE INSTITUTE (ACI) REQUIREMENTS.
3– THE MINIMUM COMPRESSIVE CYLINDER STRENGTH AT 28 DAYS FOR VARIOUS STRUCTURES SHALL BE AS GIVEN IN THE FOLLOWING TABLE.

STRUCTURE/STRUCTURAL ELEMENT	MINIMUM COMPRESSIVE CYLINDER STRENGTH AT 28 DAYS (psi)
BLINDING CONCRETE/PLAIN CONCRETE	1500 (1:3:6)
SLABS , BEAMS & ALL OTHER STRUCTURAL ELEMENTS	2500 (1:2:4)
COLUMNS	3000 (1:1.5:3)
WATER RETAINING STRUCTURES	4000 (1:1:2)

3.2 MIX DESIGN

THE MIX DESIGN FOR THE SPECIFIED GRADES OF CONCRETE MEETING ALL REQUIREMENTS OF STRENGTH, WORKABILITY AND DURABILITY, SHALL BE CARRIED OUT BY THE CONTRACTOR AND SUBMITTED TO THE ENGINEER FOR HIS APPROVAL. CHEMICAL ADDITIVES SUCH AS RETARDERS/SUPER PLASTICIZERS MAY BE USED SUBJECT TO THE APPROVAL BY THE ENGINEER.

3.3 AGGREGATE SIZE

MAXIMUM AGGREGATE SIZE SHALL BE AS FOLLOWS UNLESS OTHERWISE APPROVED BY THE ENGINEER.

STRUCTURAL ELEMENT	MAX. AGGREGATE SIZE (Inch)
FOUNDATION MATS, RAFTS AND FOOTINGS UP TO 3.0 FT. THICK.	1½"
COLUMNS AND BEAMS	3/4"
WALLS	3/4"
SLABS	3/4"

3.4 CONSTRUCTION JOINTS

1– GENERALLY, THE CONSTRUCTION JOINTS AS INDICATED ON THE DRAWINGS WILL BE FOLLOWED. HOWEVER THE CONTRACTOR MAY USE AN ALTERNATE CONSTRUCTION JOINTS ARRANGEMENT TO SUIT HIS REQUIREMENTS, WITH PRIOR APPROVAL OF THE ENGINEER. FOR THIS PURPOSE, THE CONTRACTOR SHALL SUBMIT HIS PROPOSAL FOR THE APPROVAL OF THE ENGINEER TWO WEEKS IN ADVANCE OF HIS SCHEDULED CONCRETE POURING DATE. ALL CONSTRUCTION JOINTS SHALL BE TREATED AS PER SPECIFICATIONS.
2– CONSTRUCTION JOINTS IN FLOOR SLABS AND BEAMS SHALL BE LOCATED AS SHOWN ON THE DRAWINGS OR AS APPROVED BY THE ENGINEER. HORIZONTAL CONSTRUCTION JOINTS IN RAFTS, SLABS AND BEAMS ARE NOT PERMITTED EXCEPT AS SPECIFICALLY INDICATED ON STRUCTURAL DRAWINGS.
3– SURFACE OF CONCRETE CONSTRUCTION JOINTS SHALL BE ROUGHENED, CLEANED AND LAITANCE REMOVED AS PER SPECIFICATIONS.
4– CONSTRUCTION JOINTS SHALL BE SO MADE AND LOCATED AS NOT TO IMPAIR THE STRENGTH OF THE STRUCTURE. THEY SHALL BE LOCATED AT THE ONE THIRD OF THE SPANS OF SLABS, BEAMS & JOISTS. IN WALLS & COLUMNS SHALL BE AT THE UNDER SIDE OF FLOORS, SLABS OR BEAMS AND AT THE TOP OF FOOTINGS OR FLOOR SLABS.
5– WATERSTOP SHALL BE PROVIDE AT CONSTRUCTION JOINTS WHERE REQUIRED WITH PRIOR APPROVAL OF THE ENGINEER.

3.5 EMBEDDED ITEMS

BEFORE PLACING CONCRETE, IT SHALL BE ENSURED THAT ALL EMBEDDED ITEMS ARE IN POSITION AND SECURELY FASTENED/WELDED IN PLACE ACCORDING TO THE DRAWINGS. EMBEDDED ITEMS SHALL BE FREE OF OIL AND OTHER FOREIGN MATTER SUCH AS LOOSE COATING OF RUST. ALL EMBEDDED ITEMS REQUIRED FOR DOORS AND WINDOWS SHALL BE SUPPLIED AND PLACED IN POSITION BY CIVIL CONTRACTOR. ALL EMBEDDED ITEMS REQUIRED FOR PIPING, ELECTRICAL AND MECHANICAL EQUIPMENTS SHALL BE SUPPLIED BY OTHERS. HOWEVER SUCH ITEMS SHALL BE PLACED AND HELD IN POSITION BY THE CIVIL CONTRACTOR BY HIS OWN SUPPORTING ARRANGEMENT APPROVED BY THE ENGINEER.

3.6 FINISHES

FINISHES OF CONCRETE SURFACES SHALL BE AS PER SPECIFICATIONS.

3.7 CONCRETE POURING

THE CONTRACTOR SHALL SUBMIT CONCRETE POURING SCHEDULE FOR ENGINEER'S APPROVAL. NO CONCRETE SHALL BE PLACED UNTIL WRITTEN PERMISSION IS GIVEN BY THE ENGINEER DURING CONSTRUCTION, STACKING OF CONSTRUCTION MATERIALS, BRICKS etc. SHALL BE AVOIDED ON SLAB PANELS.

4. REINFORCING STEEL

ALL REINFORCING STEEL SHALL BE DEFORMED BARS CONFORMING TO THE LATEST ASTM A615 GRADE 60 HAVING A MINIMUM YIELD STRENGTH OF 60,000 PSI.

4.1 CONCRETE PROTECTION TO REINFORCEMENT

MINIMUM CLEAR CONCRETE COVER TO REINFORCEMENT SHALL BE AS FOLLOWS, UNLESS OTHERWISE SPECIFIED ON THE DRAWINGS.

STRUCTURAL ELEMENT	COVER (Inch)
1– FOUNDATION IN CONTACT WITH SOIL & WATER	3"
FOUNDATIONS NOT IN CONTACT WITH SOIL	2"
2– WALLS (INCLUDING RETAINING WALLS)	
FACE EXPOSED TO WEATHER OR EARTH	2"
FACE NOT EXPOSED TO WEATHER OR EARTH	1½"
FACE EXPOSED TO WATER	3"
3– SLABS	3/4"
4– COLUMNS AND BEAMS	1½"

4.2 DETAILING OF REINFORCEMENT

ADDITIONAL BARS EQUAL TO 1/2 REINFORCING BARS AREA, INTERRUPTED BY OPENING, SHALL BE PROVIDED AT EACH SIDE OF OPENING AND SHALL EXTEND EQUAL TO SPLICE LENGTH (3'-0" MIN.) BEYOND OPENING. MIN. 2-#5 BARS ON EACH SIDE AND FACE SHALL BE USED. FOR OPENINGS LESS THAN 12"X12", OFFSET THE REINFORCEMENT TO CLEAR OPENING AND NO ADDITIONAL REINFORCEMENT SHALL BE PROVIDED.

A. ACCESSORIES

BAR SUPPORTS, SPACERS AND OTHER ACCESSORIES ARE NOT SHOWN ON THE DRAWINGS. THE RECOMMENDATIONS OF ACI-315 OR OTHER SUPPORTING SYSTEM AS APPROVED BY THE ENGINEER MAY BE USED.

B. STANDARD REINFORCEMENT DETAILS

a) MINIMUM BEND DIAMETERS

THE BEND DETAILS SHALL BE AS SHOWN IN THE TABLE AND FIGURES BELOW.

TABLE (1) – MINIMUM DIAMETER OF BEND

BAR SIZE	MINIMUM DIAMETER OF BEND
#3 Through #5	$4D_b$
#6 Through #8	$6D_b$
#9, #10 and #11	$8D_b$

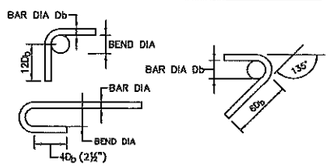

STANDARD HOOKS FOR REINFORCEMENT OTHER THAN STIRRUPS, TIES & HOOPS

STANDARD HOOKS FOR STIRRUPS TIES AND HOOPS

b) DEVELOPMENT LENGTH

UNLESS NOTED OTHERWISE ON THE DRAWINGS, MINIMUM BASIC DEVELOPMENT LENGTH FOR Fy = 60000 PSI (GRADE 60) SHALL BE AS FOLLOWS:

(a) TOP BARS

f_c' (psi) \ Bar Size	DEVELOPMENT LENGTH 'Inch' (Fy=60000 psi)								
	#3	#4	#5	#6	#7	#8	#9	#10	#11
3000 (1:1.5:3)	21	30	36	42	63	72	81	90	99
4000 (1:1:2)	18	24	33	36	54	63	69	78	84

(b) BOTTOM BARS

f_c' (psi) \ Bar Size	DEVELOPMENT LENGTH 'Inch' (Fy=60000 psi)								
	#3	#4	#5	#6	#7	#8	#9	#10	#11
3000 (1:1.5:3)	18	21	27	33	48	54	63	69	75
4000 (1:1:2)	15	18	24	30	42	48	54	60	66

c) SPLICE/LAP LENGTH

1– WELDED WIRE FABRIC MESH SHALL BE LAPPED OVER ADJACENT SHEET BY 12 INCH.
2– BARS SHALL BE SPLICED ONLY WHERE INDICATED, OR AT LOCATIONS SPECIFICALLY APPROVED BY THE ENGINEER.
3– THE LAPS SHOULD BE STAGGERED.
4– UNLESS OTHERWISE STATED ON THE DRAWINGS THE FOLLOWING LAP LENGTHS SHALL BE PROVIDED.

(a) TOP BARS

f_c' (psi) \ Bar Size	SPLICE/LAP LENGTH 'Inch' (Fy=60000 psi)								
	#3	#4	#5	#6	#7	#8	#9	#10	#11
3000 (1:1.5:3)	27	39	48	54	81	93	105	114	129
4000 (1:1:2)	24	33	42	48	72	81	90	102	111

(b) BOTTOM BARS

f_c' (psi) \ Bar Size	SPLICE/LAP LENGTH 'Inch' (Fy=60000 psi)								
	#3	#4	#5	#6	#7	#8	#9	#10	#11
3000 (1:1.5:3)	21	27	36	42	63	72	81	90	99
4000 (1:1:2)	18	24	30	36	54	63	72	78	84

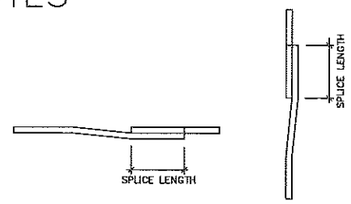

BEAM SPLICE (TYP.) COLUMN SPLICE (TYP.)

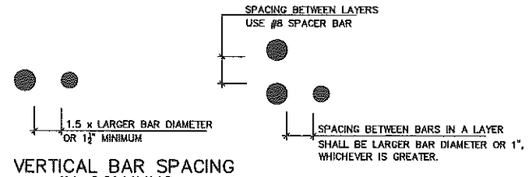

VERTICAL BAR SPACING IN COLUMNS

BAR SPACING IN BEAM

4.3 ALL REINFORCING STEEL SHALL BE ACCURATELY LOCATED IN THE FORMS AND HELD FIRMLY IN PLACE BEFORE & DURING THE PLACEMENT OF CONCRETE, BY MEANS OF WIRE AND SUPPORTS ADEQUATE TO PREVENT DISPLACEMENT DURING THE COURSE OF CONSTRUCTION.
4.4 DISTRIBUTION REINFORCEMENT SHALL BE PROVIDED AS #3@10"c/c UNLESS OTHERWISE SPECIFIED.

5. FORMWORK

1– THE DESIGN AND ENGINEERING OF THE FORMWORK, AS WELL AS ITS CONSTRUCTION IS THE REASONABILITY OF THE CONTRACTOR. THE FORMWORK SHALL BE DESIGNED CONFORMING TO THE REQUIREMENTS OF ACI 301 AND CONTRACT SPECIFICATIONS.
2– THE FORMWORK SHALL HAVE SUFFICIENT STRENGTH TO WITHSTAND THE PRESSURE RESULTING FROM PLACEMENT AND VIBRATION OF CONCRETE AND SHALL HAVE SUFFICIENT RIGIDNESS TO MAINTAIN THE TOLERANCE SPECIFIED IN ACI 301 AND CONTRACT SPECIFICATIONS.

6. SHOP DRAWINGS

1– SHOP DRAWINGS FOR FORMWORK, CONCRETE AND REINFORCEMENT SHOWING ALL FABRICATION DIMENSIONS AND LOCATION SHALL BE PREPARED BY THE CONTRACTOR AND SUBMITTED FOR THE ENGINEER'S APPROVAL.
2– THE CONTRACTOR SHALL ALSO PREPARE BAR BENDING SCHEDULES AND SUBMIT THESE FOR APPROVAL OF THE ENGINEER.
3– IT WILL BE PREFERABLE THAT CUTTING AND BENDING OF REINFORCING STEEL BE CARRIED OUT IN WORKSHOP WITH CUTTING BENDING MACHINE.

7. SHORING AND BRACING

1– SHORE & BRACE ALL PARTS OF THE BUILDING DURING CONSTRUCTION, TO THE EXTENT NECESSARY TO ENSURE COMPLETE SAFETY, STRENGTH & SERVICEABILITY OF ALL STRUCTURAL ELEMENTS UNDER ALL CONDITIONS OF LOADS, WHICH MAY OCCUR DURING CONSTRUCTION. SUCH SHORING & BRACING IS THE CONTRACTOR'S SOLE RESPONSIBILITY AND IS NOT SHOWN ON STRUCTURAL DRAWINGS OR SPECIFIED IN THE PROJECT SPECIFICATIONS.
2– THE CONTRACTOR SHALL BE RESPONSIBLE FOR THE SAFETY AND STABILITY OF THE ADJACENT EXISTING STRUCTURES AND SHALL PROVIDE SHORING AND BRACING DURING EXCAVATION AND CONSTRUCTION, WHEREVER AND WHENEVER REQUIRED TO THE SATISFACTION OF THE ENGINEER.

8. BRICK WORK

1– ALL BRICK WORK SHALL CONFORM TO SPECIFICATIONS GIVEN IN THE CONTRACT DOCUMENT.
2– ALL BRICKS SHALL BE SOUND, HARD, WELL BURNT AND OF UNIFORM SIZE, COLOUR AND TEXTURE. DIMENSIONAL VARIATION IN SIZES SHALL NOT EXCEED 1/8".
3– ALL BRICK WORK SHALL BE ERECTED PLUMB AND TRUE TO LINE AND LEVEL. THE MAXIMUM VARIATION IN ANY STOREY HEIGHT OR ANY LENGTH OF WALL SHALL BE 1/8" IN 10', OR AS SPECIFIED IN THE CONTRACT SPECIFICATIONS.
4– MORTAR USED IN MASONRY CONSTRUCTION SHALL HAVE AN ULTIMATE COMPRESSIVE STRENGTH OF NOT LESS THAN 1800 Psi AND SHALL CONFORM TO ASTM C270, COMPRESSIVE STRENGTH OF MASONRY AT 28 DAYS SHALL NOT BE LESS THAN 1150 Psi.
5– ALL DESIGN, DETAILING, MATERIAL AND WORKMANSHIP SHALL BE IN ACCORDANCE WITH RELEVANT ACI, ASTM, AND UBC CODE AND STANDARDS.
6– TESTING OF COMPRESSIVE STRENGTH OF MASONRY SHALL BE DONE, IF SO DIRECTED BY THE ENGINEER, IN ACCORDANCE WITH ASTM C67 OR PAKISTAN STANDARD-208.
7– THE AVERAGE COMPRESSIVE STRENGTH OF TWELVE HALF BRICKS SHALL BE NOT LESS THAN 2000 psi AND SHALL BE NOT LESS THAN 1800 psi FOR ANY INDIVIDUAL BRICK.
8– BRICK SHALL BE LAID "FROG" UPWARD WITH MORTAR JOINT AND IN ENGLISH AND FLEMISH BOND OR AS DIRECTED BY THE ENGINEER.
9– TESTING OF COMPRESSIVE STRENGTH OF MASONRY SHALL BE DONE, IF SO DIRECTED BY THE ENGINEER, IN ACCORDANCE WITH ASTM C67 OR PAKISTAN STANDARD-208.

9. TOLERANCES AND DIMENSIONS

BEFORE THE FORMWORK IS LAID AT SITE THE CONTRACTOR MUST VERIFY AND CHECK OVERALL DIMENSIONS/ELEVATIONS OF THE STRUCTURE GIVEN IN THE STRUCTURAL DRAWINGS TO SEE IF THE FINISHED DIMENSIONS/ELEVATIONS GIVEN ON THE DRAWINGS TALLY AFTER PROVIDING THE REQUIRED FINISH. THE ENGINEER'S REPRESENTATIVE SHALL VERIFY THE MEASUREMENTS OF STRUCTURAL SIZE AND ELEVATIONS TO BE RECORDED IN THE RELEVANT POUR STEPS. PERMISSION TO PROCEED SHALL NOT BE GRANTED IF DEVIATIONS ARE MORE THAN PERMISSIBLE TOLERANCES, AS STIPULATED IN THE SPECIFICATIONS.

10. LOCAL ADJUSTMENTS

LOCAL ADJUSTMENTS TO ACCOMMODATE FIXTURES/EMBEDMENTS/OPENINGS MAY BE MADE AT SITE, SUBJECT TO THE APPROVAL OF THE ENGINEER, AS LONG AS IT DOES NOT MATERIALLY AFFECT THE DESIGN.

11. STRUCTURAL STEEL

1– ALL STRUCTURAL STEEL SECTIONS SHALL CONFORM TO ASTM A36M OR EQUIVALENT WITH MINIMUM YIELD STRENGTH OF 248 MPa (36,000 psi). ALL ANCHORS, BOLTS, NUTS AND WASHERS SHALL CONFORM TO ASTM A325M. ALL STEEL PLATES, TUBES AND BUILT-UP SECTIONS SHALL CONFORM TO HR 235.
2– ALL WELDS SHALL CONFORM TO THE APPLICABLE PROVISIONS OF A.W.S (AMERICAN WELDING SOCIETY) CODE. ALL WELDING ELECTRODES SHALL CONFORM TO E 70XX.
3– MINIMUM SIZE OF FILLET WELD SHALL BE 7mm EXCEPT OTHERWISE NOTED.
4– ALL STRUCTURAL STEEL SECTIONS SHALL BE GIVEN TWO COATS OF REDOXIDE PAINT. ALL EXPOSED STEEL SURFACES SHALL BE PAINTED WITH APPROVED PAINT AND COLOUR AS DIRECTED BY THE ENGINEER.
5– THE BASE PLATES OF THE COLUMNS SHALL BE LEVELED AND THEN GROUTED WITH APPROVED NON-SHRINK GROUT USING STANDARD APPROVED PROCEDURE.
6– ALL ANCHOR BOLTS SHALL BE HOT DIPPED GALVANIZED.
7– NUTS AND BOLTS FOR CLAMPS SHALL BE SPOT WELDED AFTER TIGHTENING.

TABLE FOR LINTEL REINFORCEMENT

OPENING WIDTH	DEPTH	BOTTOM	TOP	STIRRUPS
3'-0" TO 4'-0"	6"	2#4	2#3	#3@6"
4'-1" TO 6'-0"	9"	3#4	3#3	#3@6"
6'-1" TO 10'-0"	9"	2#6	2#4	#3@5"

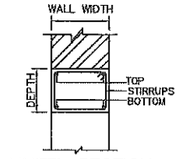

LINTEL SECTION

12– REINFORCEMENT DETAIL AT OPENING IN SLAB/SLEEVES.

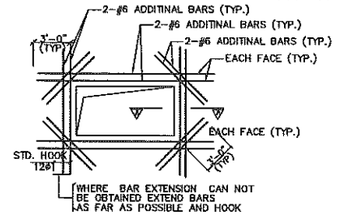

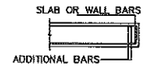

SECTION A-A

NOTES
- FOR OPENING WITH MAXIMUM DIMENSION OVER 5'-0" REFER TO OTHER DETAILS.
- USE THESE DETAILS IF NOT SHOWN IN DESIGN DRAWINGS.

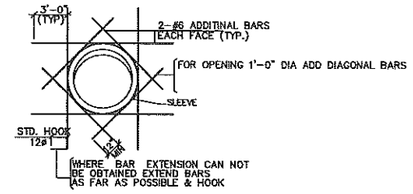

13. SLAB CURTAILMENT PLAN & CORNER REINFORCEMENT END

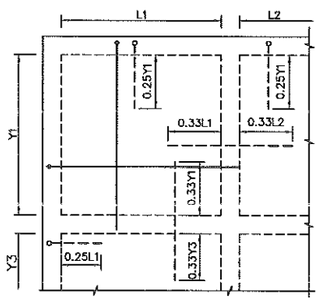

TYPICAL SLAB REINFORCEMENT (CUT OFF POINTS)

NOTE. TOP REINFORCEMENT OF SLAB AT CONTINUOUS EDGE SHALL BE GREATER OF THE ADJACENT SPAN.

TENDER DRAWING

NOT TO BE USED FOR CONSTRUCTION FOR TENDER PURPOSE ONLY

REFERENCE DRAWINGS	REV.NO.	DATE	DESCRIPTION	BY	CKD	APPR

PROGRAM MANAGEMENT UNIT, PUNJAB INTERMEDIATE CITIES IMPROVEMENT INVESTMENT PROGRAM (PICIIP), LOCAL GOVERNMENT AND COMMUNITY DEVELOPMENT (LG & CD) DEPARTMENT, PUNJAB)

CONSULTING SERVICES FOR ENGINEERING, PROCUREMENT AND CONSTRUCTION MANAGEMENT (EPCM) CONSULTANT.

COVERED PARKING SHEDS & ALLIED STRUCTURES
MUBARAKPURA CAPITAL ROAD, SIALKOT
GENERAL NOTES

NESPAK

DESN. NESPAK	RECOMMENDED	VER./CKD.	APPROVED
DWN. GHULAM M.			
FILE	DATE AUG. 2020	DRAWING NO. 3976/033/TD/G001	REV. 0
CKD.			
SUBM.			

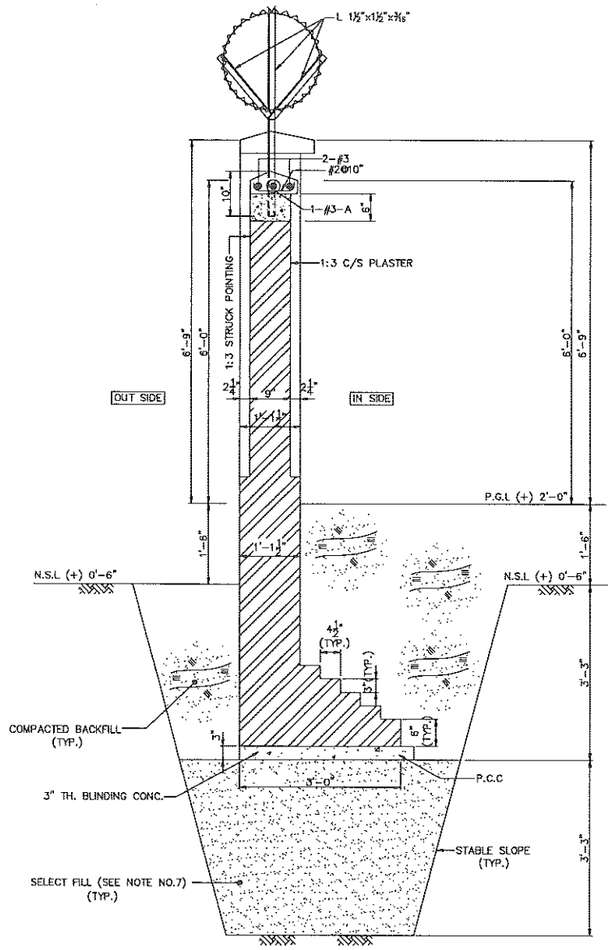

SECTION 1–1
SCALE 3/4"=1'-0"

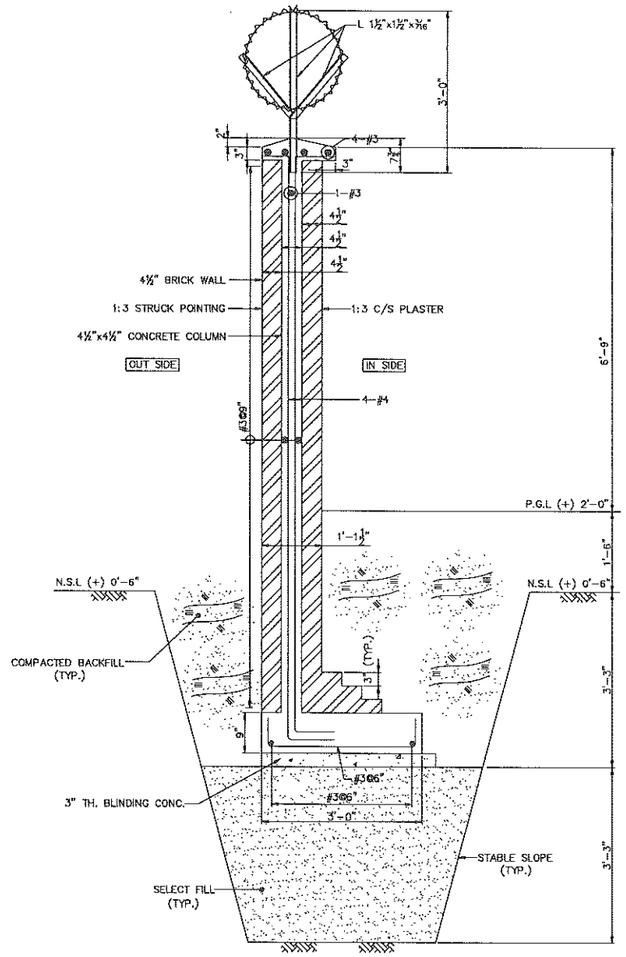

SECTION 2–2
SCALE 3/4"=1'-0"

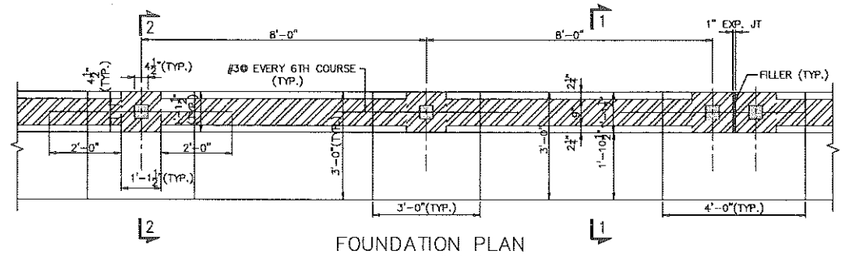

FOUNDATION PLAN
SCALE 1/2"=1'-0"

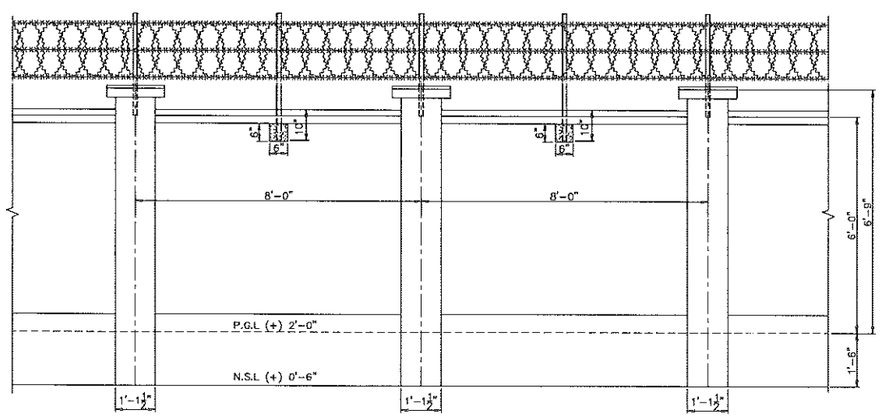

TYPICAL WALL ELEVATION
SCALE 1/2"=1'-0"

NOTES:

1. ALL DIMENSIONS ARE IN FEET AND INCHES UNLESS OTHERWISE NOTED.
2. FOR GENERAL NOTES REFER DRAWING NO. 3976/033/TD/G001.
3. BACK FILLING AROUND FOUNDATIONS & WALLS SHALL BE CARRIED OUT SIMULTANEOUSLY ON BOTH SIDES TO AVOID ANY LATERAL DISPLACEMENT. BACK FILLING UNDER FLOORS AND AROUND FOUNDATIONS SHALL BE DONE IN LAYERS NOT EXCEEDING 6 in.
4. THE AREA AROUND THE WALL SHALL BE PROPERLY DRAINED DURING AND AFTER CONSTRUCTION OF THE BOUNDARY WALL.
5. MORTAR USED IN MASONRY CONSTRUCTION (1:3) SHALL HAVE AN ULTIMATE COMPRESSIVE STRENGTH OF NOT LESS THAN 1800 Psi AND SHALL CONFORM TO ASTM C270,COMPRESSIVE STRENGTH OF MASONRY AT 28 DAYS SHALL NOT BE LESS THAN 1150 Psi.
6. EXPANSION JOINT IN BOUNDARY WALLS SHALL BE FURNISHED AFTER EVERY 10 PANELS.
7. THE SELECT FILL SHOULD BE A–3 AS PER AASHTO SOIL CLASSIFICATIONS.THE SELECT FILL MATERIAL SHOULD BE REPLACED AND COMPACTED IN LAYERS OF THICKNESS APPROPRIATE TO TYPE AND SIZE OF COMPACTED EQUIPMENT TO AT LEAST 75% AT RELATIVE DENSITY OR 95% MODIFIED PROCTOR DRY DENSITY, AS APPROPRIATE. THE ON SITE SOIL AT FOUNDATION EXCAVATION BASE SHOULD BE PROOF ROLLED PRIOR TO THE PLACEMENT OF SELECT FILL/FOUNDATION.

NOT TO BE USED FOR CONSTRUCTION
FOR TENDER PURPOSE ONLY

SCALE 0 1 2 3 4 5 FEET
SCALE 3/8"=1'-0"
UNLESS OTHERWISE NOTED

PROGRAM MANAGEMENT UNIT, PUNJAB INTERMEDIATE CITIES IMPROVEMENT INVESTMENT PROGRAM (PICIIP), LOCAL GOVERNMENT AND COMMUNITY DEVELOPMENT (LG & CD) DEPARTMENT, PUNJAB)

CONSULTING SERVICES FOR ENGINEERING, PROCUREMENT AND CONSTRUCTION MANAGEMENT (EPCM) CONSULTANT

PARKING SHEDS & ALLIED STRUCTURES MUBARAKPURA CAPITAL ROAD, SIALKOT BOUNDARY WALL (FOUNDATION & SECTIONS)

NESPAK

REFERENCE DRAWINGS	REV.NO.	DATE	DESCRIPTION	BY	CKD	APPR		

DESN. NESPAK	RECOMMENDED	VER./CKD.	APPROVED
DWN. M.ASIM/TARIQ			
FILE	DATE	DRAWING NO.	REV.
CKD.	AUG. 2020	3976/033/TD/3G01	0
SUBM.			

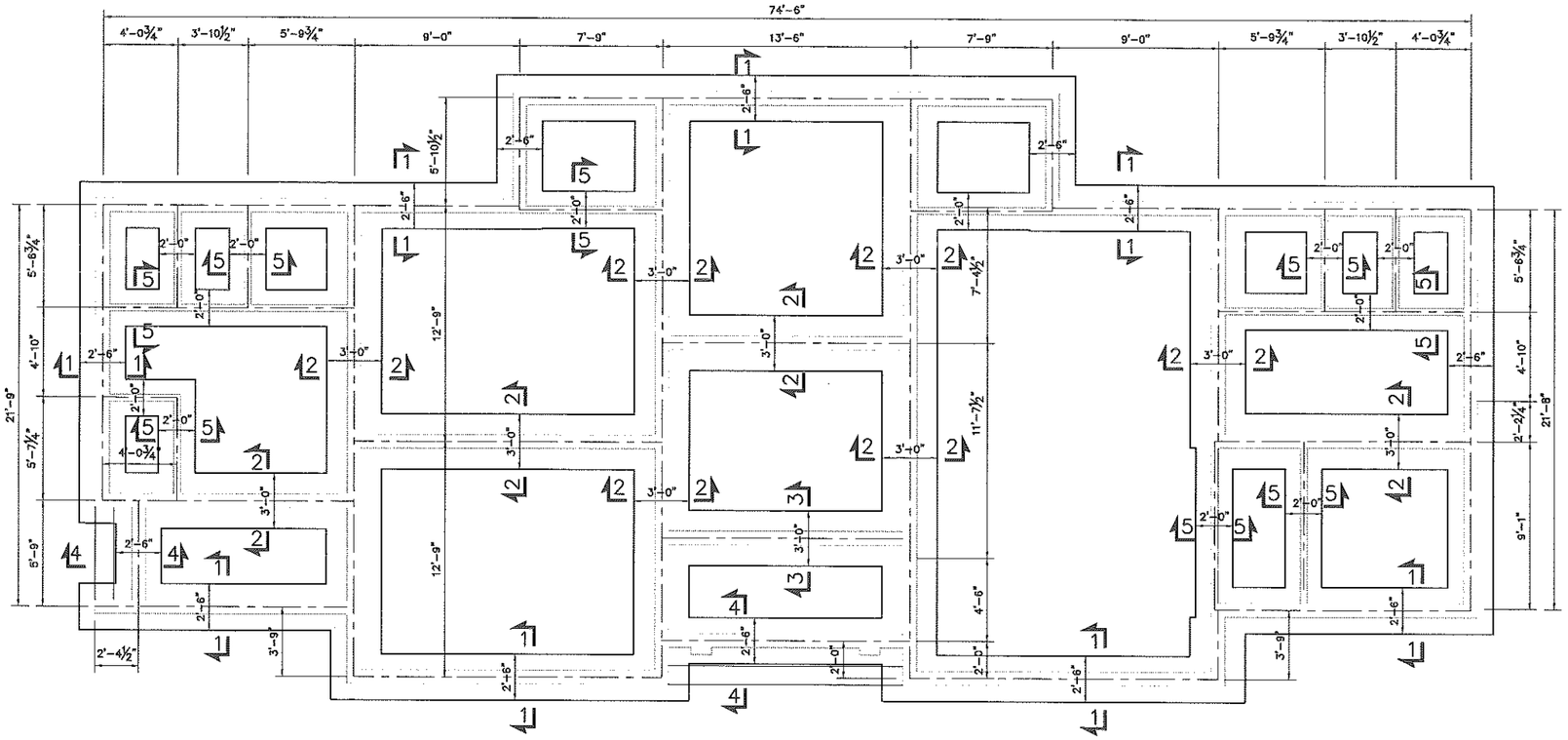

FOUNDATION LAYOUT PLAN

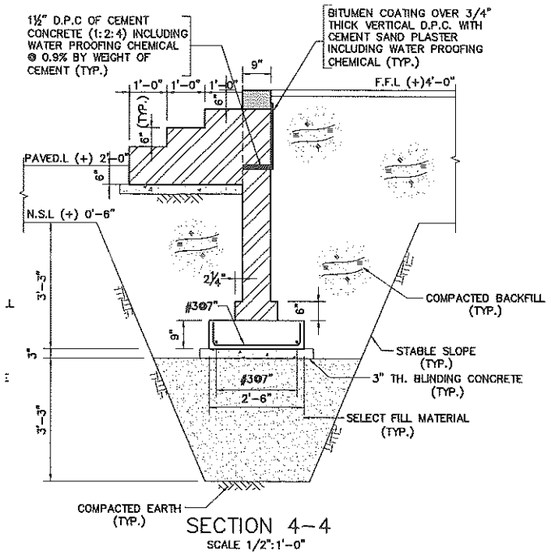

SECTION 4–4
SCALE 1/2":1'-0"

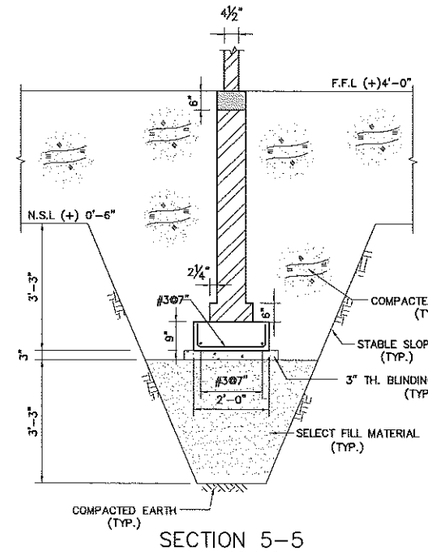

SECTION 5–5
SCALE 1/2":1'-0"

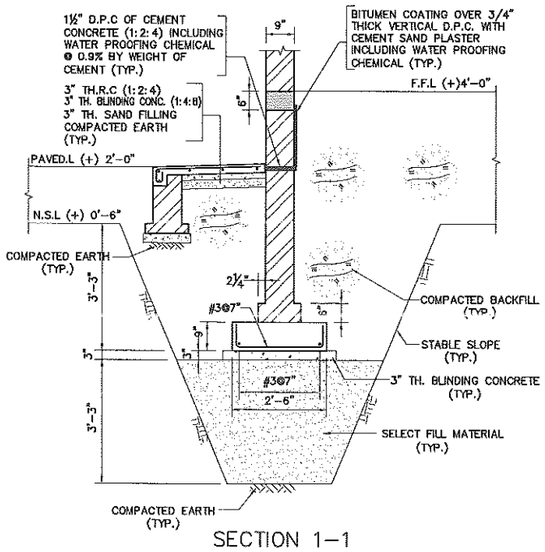

SECTION 1–1
SCALE 1/2":1'-0"

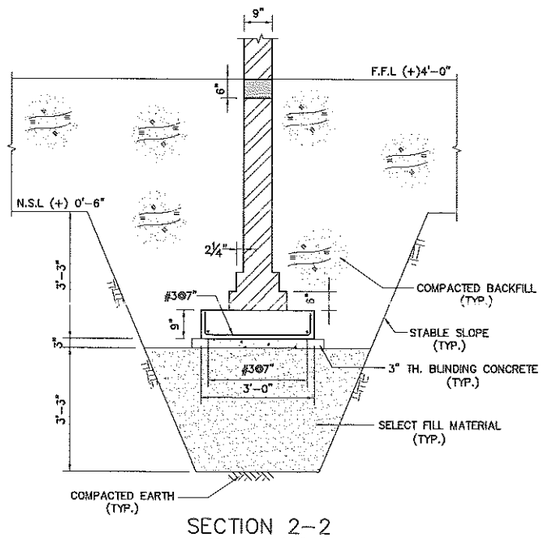

SECTION 2–2
SCALE 1/2":1'-0"

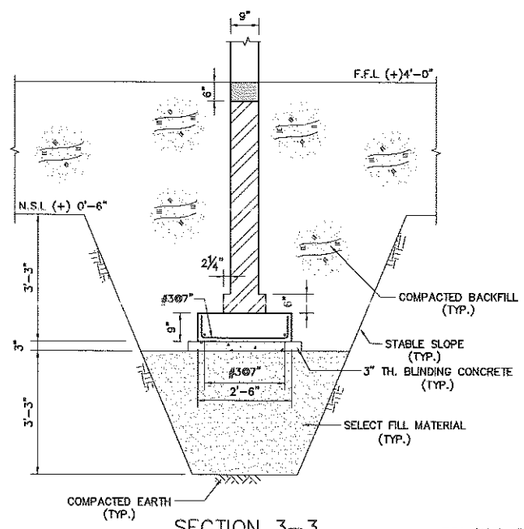

SECTION 3–3
SCALE 1/2":1'-0"

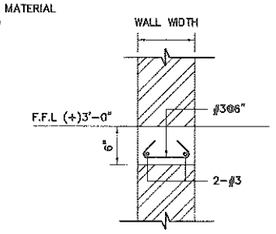

TYPICAL R.C PLINTH BAND
SCALE 1"=1'-0"

NOTE

1. FOR GENERAL NOTES PREFER DWG. 3976/033/C/G001

TENDER DRAWING

NOT TO BE USED FOR CONSTRUCTION
FOR ESTIMATION PURPOSE ONLY

SCALE 0 5 10 FEET
SCALE 3/16"=1'-0"
UNLESS OTHERWISE NOTED

PROGRAM MANAGEMENT UNIT, PUNJAB INTERMEDIATE CITIES IMPROVEMENT INVESTMENT PROGRAM (PICIIP), LOCAL GOVERNMENT AND COMMUNITY DEVELOPMENT (LG & CD) DEPARTMENT, PUNJAB)

CONSULTING SERVICES FOR ENGINEERING, PROCUREMENT AND CONSTRUCTION MANAGEMENT (EPCM) CONSULTANT.

COVERED PARKING SHEDS AT MUBARAKPURA CAPITAL ROAD, SIALKOT OFFICE BUILDING-FOUNDATION PLAN & SECTIONS (CONCRETE OUTLINE & REINFORCEMENT)

NESPAK

REFERENCE DRAWINGS	REV NO.	DATE	DESCRIPTION	BY	CKD.	APPR.

DESN. NESPAK	RECOMMENDED	VER./CKD.	APPROVED
DWN. SAEED			
FILE	DATE	DRAWING NO.	REV.
CKD.	AUG. 2020	3976/033/TD/2G01	0
SUBM.			

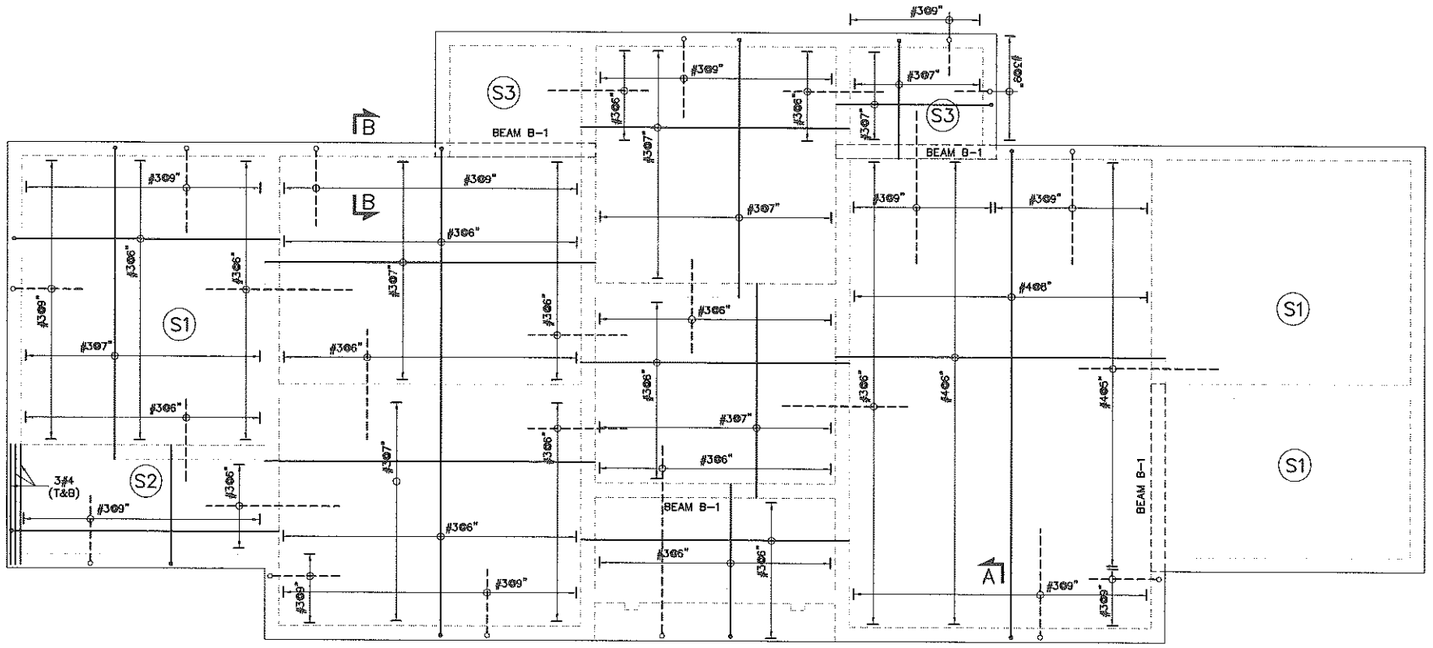

ROOF SLAB
(SLAB THICKNESS 6" UNLESS OTHERWISE NOTED)

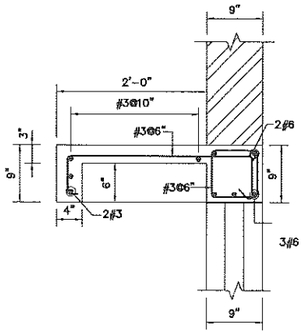

SECTION A–A
SCALE: 1"=1'-0"

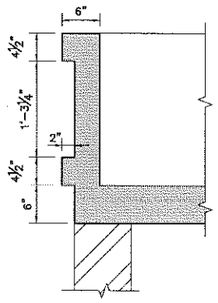

SECTION B–B
(CONCRETE OUTLINE)
SCALE: 1"=1'-0"

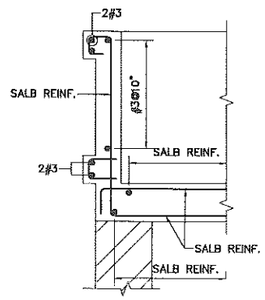

SECTION B–B
(REINFORCEMENT)
SCALE: 1"=1'-0"

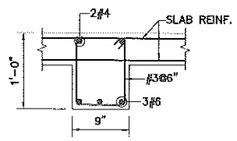

BEAM B1
SCALE: 1"=1'-0"

TENDER DRAWING

NOT TO BE USED FOR CONSTRUCTION
FOR ESTIMATION PURPOSE ONLY

NOTES:

1. FOR GENERAL NOTES REFER DRAWING NO. 3976/033/C/G001.

SCALE 0 1 2 3 4 5 FEET

SCALE 3/8"=1'-0"
UNLESS OTHERWISE NOTED

PROGRAM MANAGEMENT UNIT, PUNJAB INTERMEDIATE CITIES IMPROVEMENT INVESTMENT PROGRAM (PICIIP), LOCAL GOVERNMENT AND COMMUNITY DEVELOPMENT (LG & CD) DEPARTMENT, PUNJAB)

REHABILITATION / IMPROVEMENT OF SEWERAGE SYSTEM, IN NORTH ZONE , SAHIWAL

COVERED PARKING SHEDS AT MUBARAKPURA
CAPITAL ROAD, SIALKOT OFFICE BUILDING - ROOF SLAB
PLAN & SECTIONS (CONCRETE OUTLINE & REINFORCEMENT)

NESPAK

DESN. NESPAK	RECOMMENDED	VER./CKD.	APPROVED
DWN. SAEED			
FILE	DATE	DRAWING NO.	REV.
CKD.	AUG, 2020	3976/033/TD/2G02	0
SUBM.			

REFERENCE DRAWINGS	REV.NO.	DATE	DESCRIPTION	BY	CKD	APPR

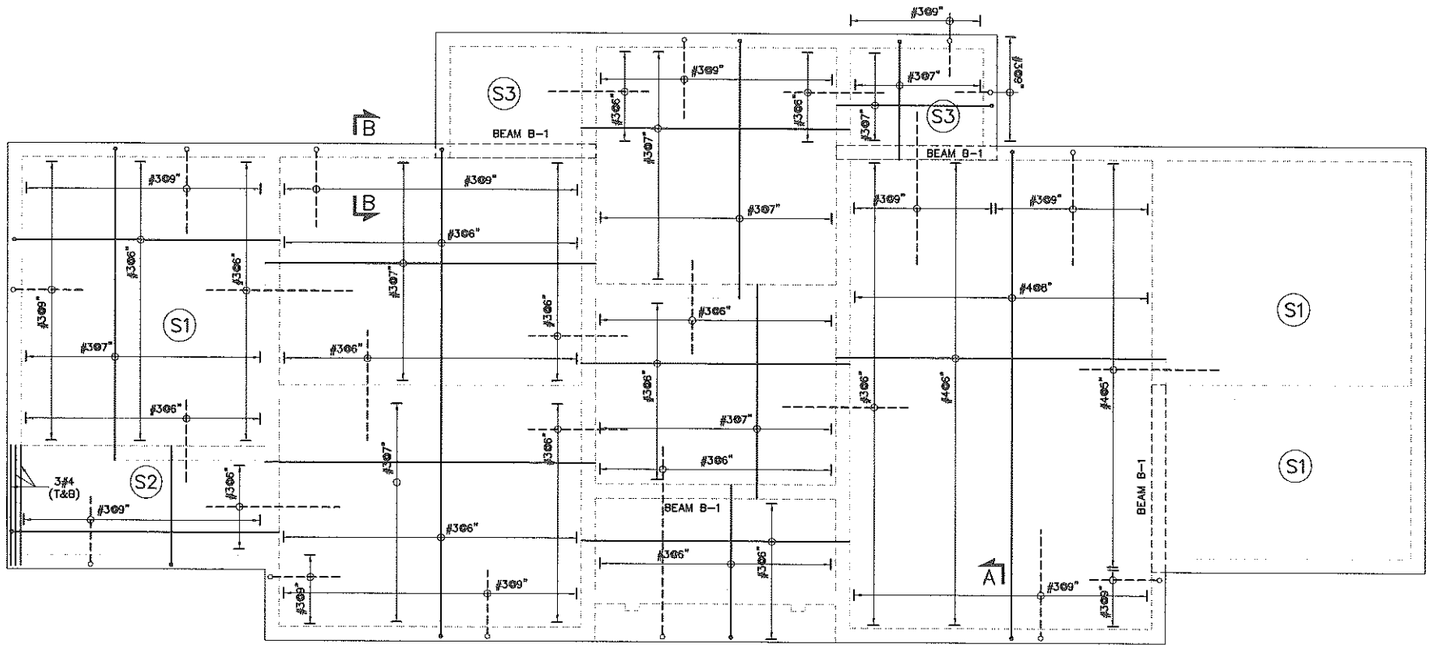

ROOF SLAB
(SLAB THICKNESS 6" UNLESS OTHERWISE NOTED)

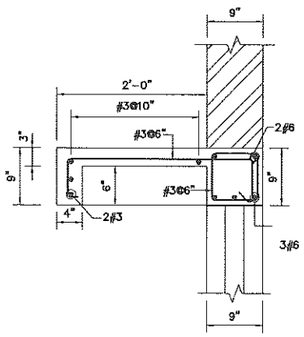

SECTION A–A
SCALE: 1"=1'-0"

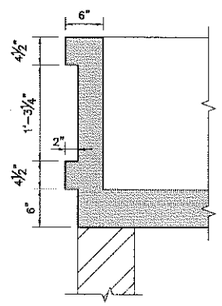

SECTION B–B
(CONCRETE OUTLINE)
SCALE: 1"=1'-0"

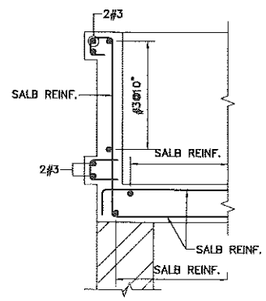

SECTION B–B
(REINFORCEMENT)
SCALE: 1"=1'-0"

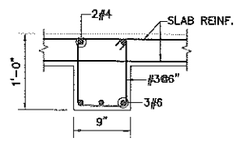

BEAM B1
SCALE: 1"=1'-0"

TENDER DRAWING

NOT TO BE USED FOR CONSTRUCTION
FOR ESTIMATION PURPOSE ONLY

NOTES:

1. FOR GENERAL NOTES REFER DRAWING NO. 3976/033/C/G001.

SCALE 0 1 2 3 4 5 FEET

SCALE 3/8"=1'-0"
UNLESS OTHERWISE NOTED

PROGRAM MANAGEMENT UNIT, PUNJAB INTERMEDIATE CITIES IMPROVEMENT INVESTMENT PROGRAM (PICIIP), LOCAL GOVERNMENT AND COMMUNITY DEVELOPMENT (LG & CD) DEPARTMENT, PUNJAB)

REHABILITATION / IMPROVEMENT OF SEWERAGE SYSTEM, IN NORTH ZONE , SAHIWAL

COVERED PARKING SHEDS AT MUBARAKPURA CAPITAL ROAD, SIALKOT OFFICE BUILDING - ROOF SLAB PLAN & SECTIONS (CONCRETE OUTLINE & REINFORCEMENT)

NESPAK

DESN. NESPAK	RECOMMENDED	VER./CKD.	APPROVED		
DWN. SAEED					
FILE	DATE	DRAWING NO.		REV.	
CKD.					
SUBM.	AUG, 2020	3976/033/TD/2G02		0	

REFERENCE DRAWINGS	REV.NO.	DATE	DESCRIPTION	BY	CKD	APPR

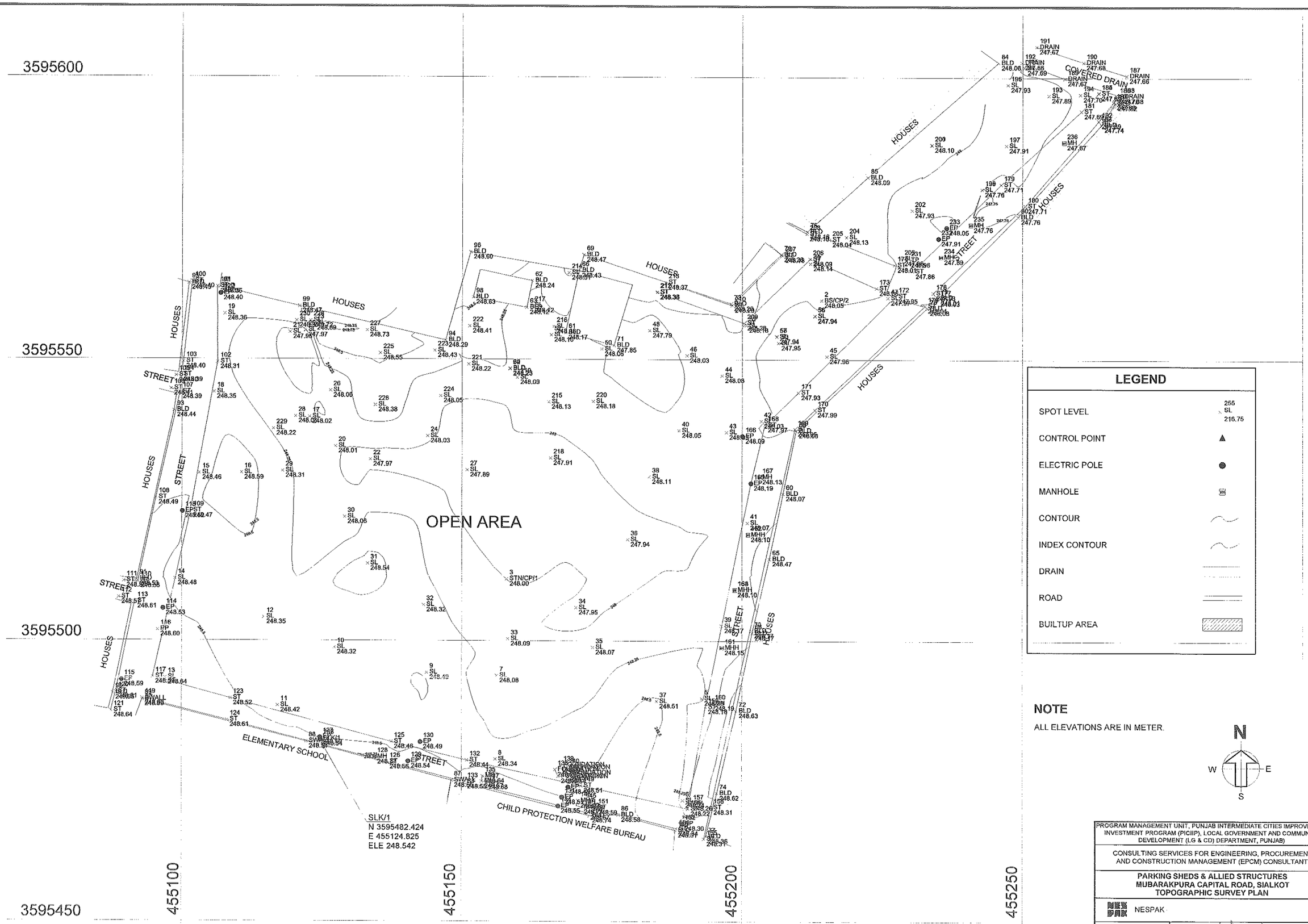

PROGRAM MANAGEMENT UNIT, PUNJAB INTERMEDIATE CITIES IMPROVEMENT INVESTMENT PROGRAM (PICIIP), LOCAL GOVERNMENT AND COMMUNITY DEVELOPMENT (LG & CD) DEPARTMENT, PUNJAB)

CONSULTING SERVICES FOR ENGINEERING, PROCUREMENT AND CONSTRUCTION MANAGEMENT (EPCM) CONSULTANT.

PARKING SHEDS & ALLIED STRUCTURES
MUBARAKPURA CAPITAL ROAD, SIALKOT
TOPOGRAPHIC SURVEY PLAN

NESPAK

DESN. NESPAK	RECOMMENDED	VERIFICKD.	APPROVED
DWN.			
FILE			
CKD.			
SUBM.			

DATE	DRAWING NO.	REV.
JULY. 2020	3976/3[illegible]/TD/B0.a	0

REFERENCE DRAWINGS	REV NO.	DATE	DESCRIPTION	BY	CKD.	APPR.

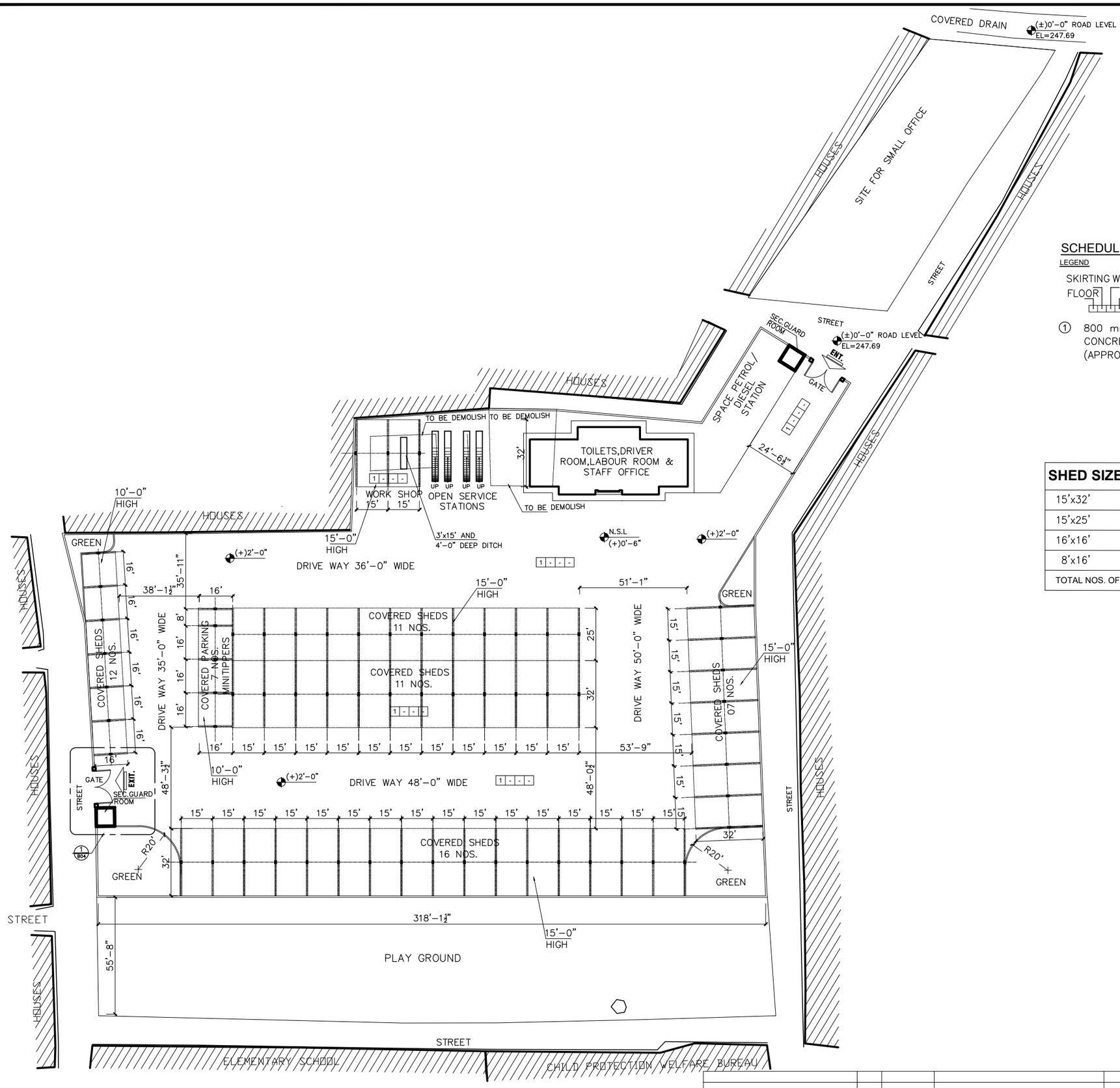

SCHEDULE OF FINISHES

LEGEND

SKIRTING WALL

FLOOR CEILING

① 800 mm THICK PRECAST INTERLOCKING CONCRETE PAVERS WITH CONCRETE CURB STONE WHERE MENTIONED (APPROVED MAKE & SHADE)

SHED SIZE	NO.OF SHEDS	NO.OF VEHICLES
15'x32'	34 NOS.	34 NOS.
15'x25'	11 NOS.	11 NOS.
16'x16'	09 NOS.	18 NOS.
8'x16'	01 NOS.	01 NOS.
TOTAL NOS. OF VEHICLES = 64 NOS.		

NOTE:

1- ROAD LEVEL IS ASSUMED AS (±)0'-0" REFERENCE TO EL = 247.69 GIVEN ON SURVEY PLAN.

2- TOTAL SITE AREA=12.76 KANAL

3- PLAY GROUND AREA=3.45 KANAL

N

W E S

REFERENCE DRAWINGS	REV NO.	DATE	DESCRIPTION	BY	CKD.	APPR.
	1	20-10-2020	PROVISION OF DITCH & RAMP	Dilsher		

PROGRAM MANAGEMENT UNIT, PUNJAB INTERMEDIATE CITIES IMPROVEMENT INVESTMENT PROGRAM (PICIIP), LOCAL GOVERNMENT AND COMMUNITY DEVELOPMENT (LG & CD) DEPARTMENT, PUNJAB)

CONSULTING SERVICES FOR ENGINEERING, PROCUREMENT AND CONSTRUCTION MANAGEMENT (EPCM) CONSULTANT.

PARKING SHEDS & ALLIED STRUCTURES
CAPITAL ROAD, JUMMAH COUNCIL, MUBARAK ROAD, SIALKOT
LAYOUT PLAN

NATIONAL ENGINEERING SERVICES PAKISTAN (PVT) LTD LAHORE

DESN. NESPAK
DWN. dilsher
FILE
CKD.
SUBM.

RECOMMENDED | VER./CKD. | APPROVED

DATE: OCT. 2021

DRAWING NO. 3976/311/TD/B01

REV. 1

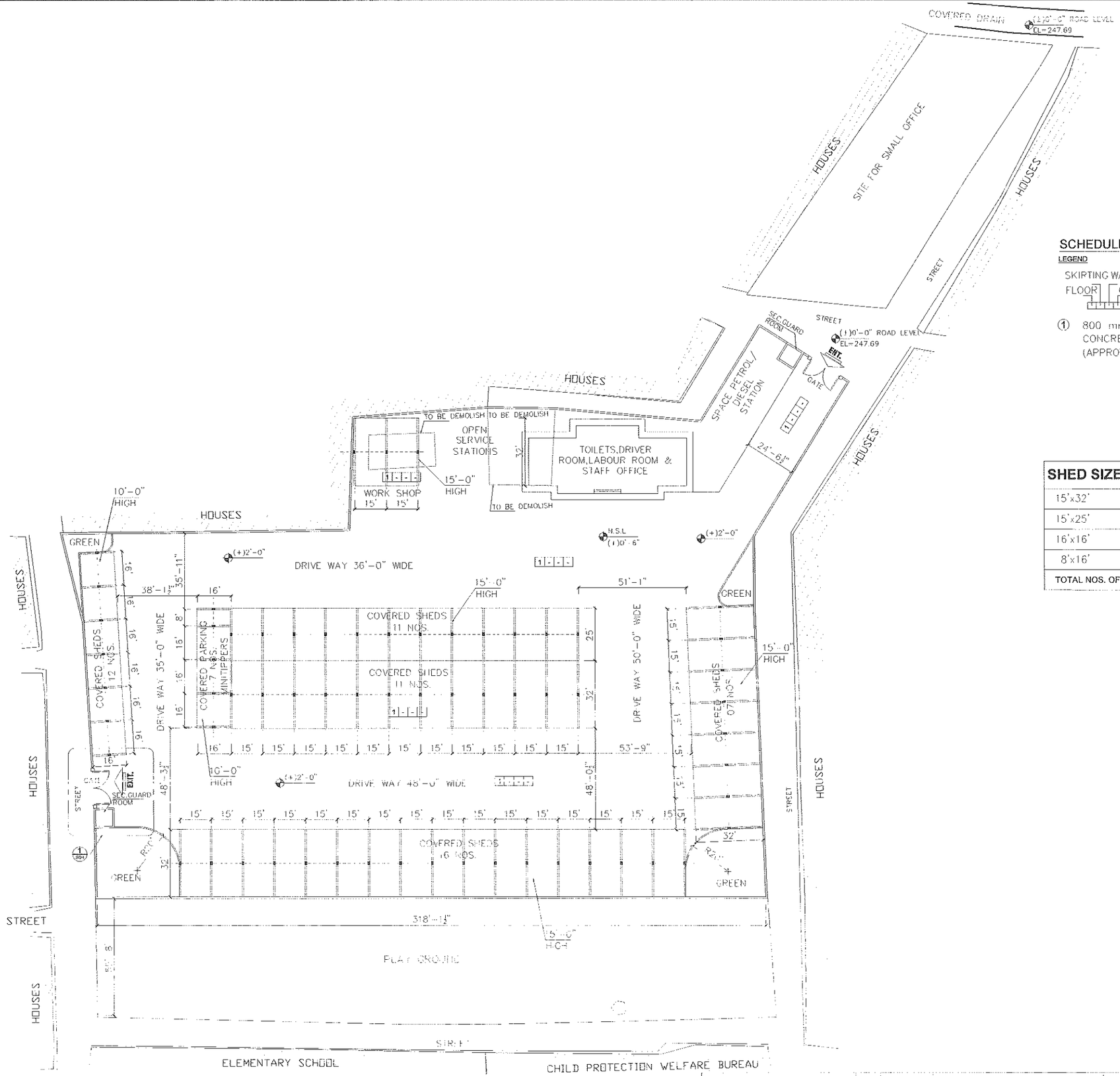

SCHEDULE OF FINISHES

LEGEND

SKIRTING WALL

FLOOR | CEILING

① 800 mm THICK PRECAST INTERLOCKING CONCRETE PAVERS WITH CONCRETE CURB STONE WHERE MENTIONED (APPROVED MAKE & SHADE)

SHED SIZE	NO.OF SHEDS	NO.OF VEHICLES
15'x32'	34 NOS.	34 NOS.
15'x25'	11 NOS.	11 NOS.
16'x16'	09 NOS.	18 NOS.
8'x16'	01 NOS.	01 NOS.
TOTAL NOS. OF VEHICLES = 64 NOS.		

NOTE:

1- ROAD LEVEL IS ASSUMED AS (±)0'-0" REFERENCE TO EL = 247.69 GIVEN ON SURVEY PLAN.

2- TOTAL SITE AREA=12.76 KANAL

N

W E S

PROGRAM MANAGEMENT UNIT, PUNJAB INTERMEDIATE CITIES IMPROVEMENT INVESTMENT PROGRAM (PICIIP), LOCAL GOVERNMENT AND COMMUNITY DEVELOPMENT (LG & CD) DEPARTMENT, PUNJAB)

CONSULTING SERVICES FOR ENGINEERING, PROCUREMENT AND CONSTRUCTION MANAGEMENT (EPCM) CONSULTANT.

PARKING SHEDS & ALLIED STRUCTURES MUBARAKPURA CAPITAL ROAD, SIALKOT LAYOUT PLAN

NESPAK

DESN. NESPAK	RECOMMENDED	VER. CKD.	APPROVED
DWN. dilisher			
FILE			
CKD.			
SUBM.	DATE AUGUST, 2020	DRAWING NO. 3976/311/TE/BG	REV. 0

REFERENCE DRAWINGS	REV NO.	DATE	DESCRIPTION	BY	CKD.	APPR.

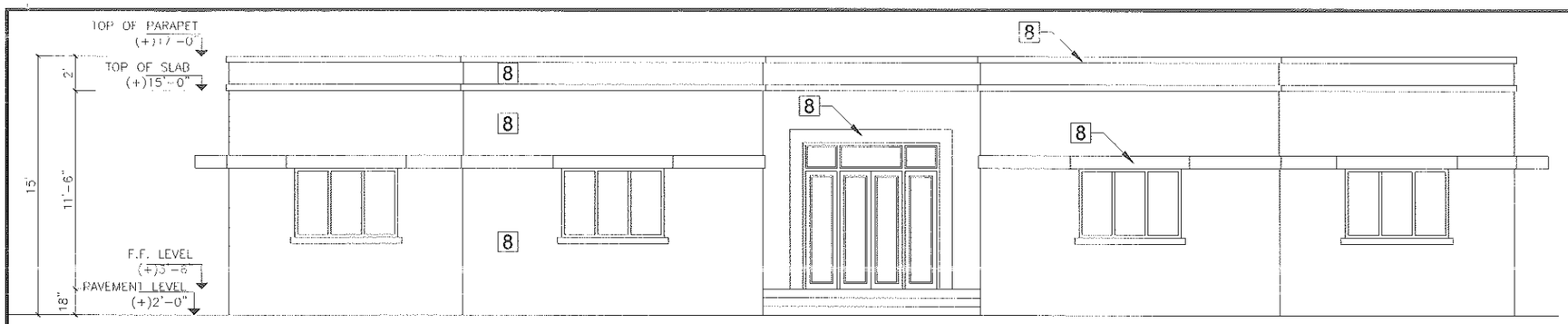

1 ELEVATION
SCALE: 1/4"=1'-0"

SCHEDULE OF INTERNAL AND EXTERNAL FINISHES

LEGEND

SKIRTING FLOOR | WALL CEILING

1. 12"x12"x3/4" CHINA VERONA MARBLE
2. 4"X12"X1/2" CHINA VERONA MARBLE SKIRTING
3. LOCAL MATT CERAMIC TILES (APPROVED MAKE & SHADE))
4. LOCAL GLAZED CERAMIC TILES OF (APPROVED MAKE & SHADE) 6'-6" HIGH FOR BATH ROOMS WITH VINYL EMULSION PAINT(OF APPROVED MAKE & SHADE) ABOVE UPTO CEILING
5. SINGLE PIECE 3/4" THICK VERONA MARBLE SLAB FOR TREADS SINGLE PIECE 1/2" THICK VERONA MARBLE SLAB FOR RISERS
6. VINYL EMULSION PAINT ON C.S PLASTER (APPROVED MAKE & SHADE)
7. 2" THICK P.C.C (1:2:4)
8. WEATHER SHIELD PAINT OF APPROVED (APPROVED MAKE & SHADE)

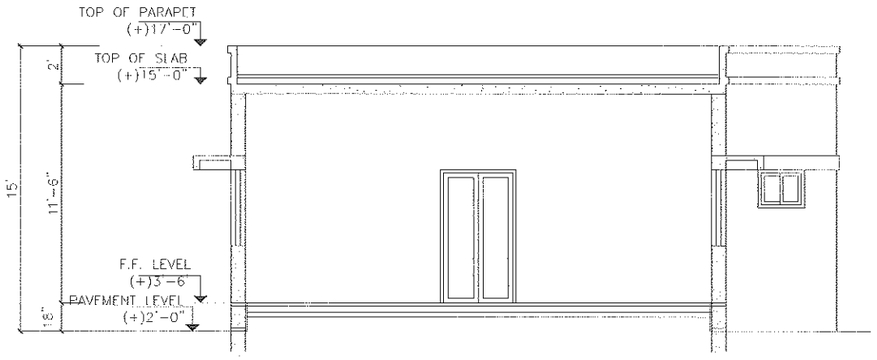

A SECTION
SCALE: 1/4"=1'-0"

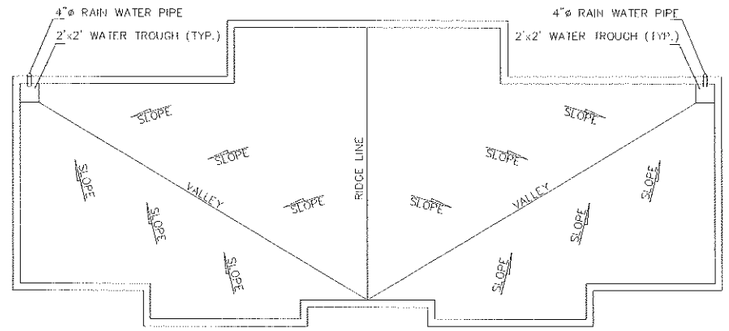

ROOF PLAN

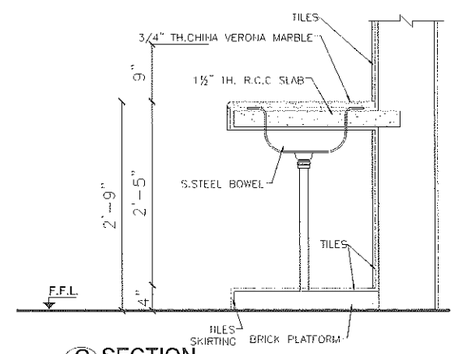

C SECTION
SCALE: 1"=1'

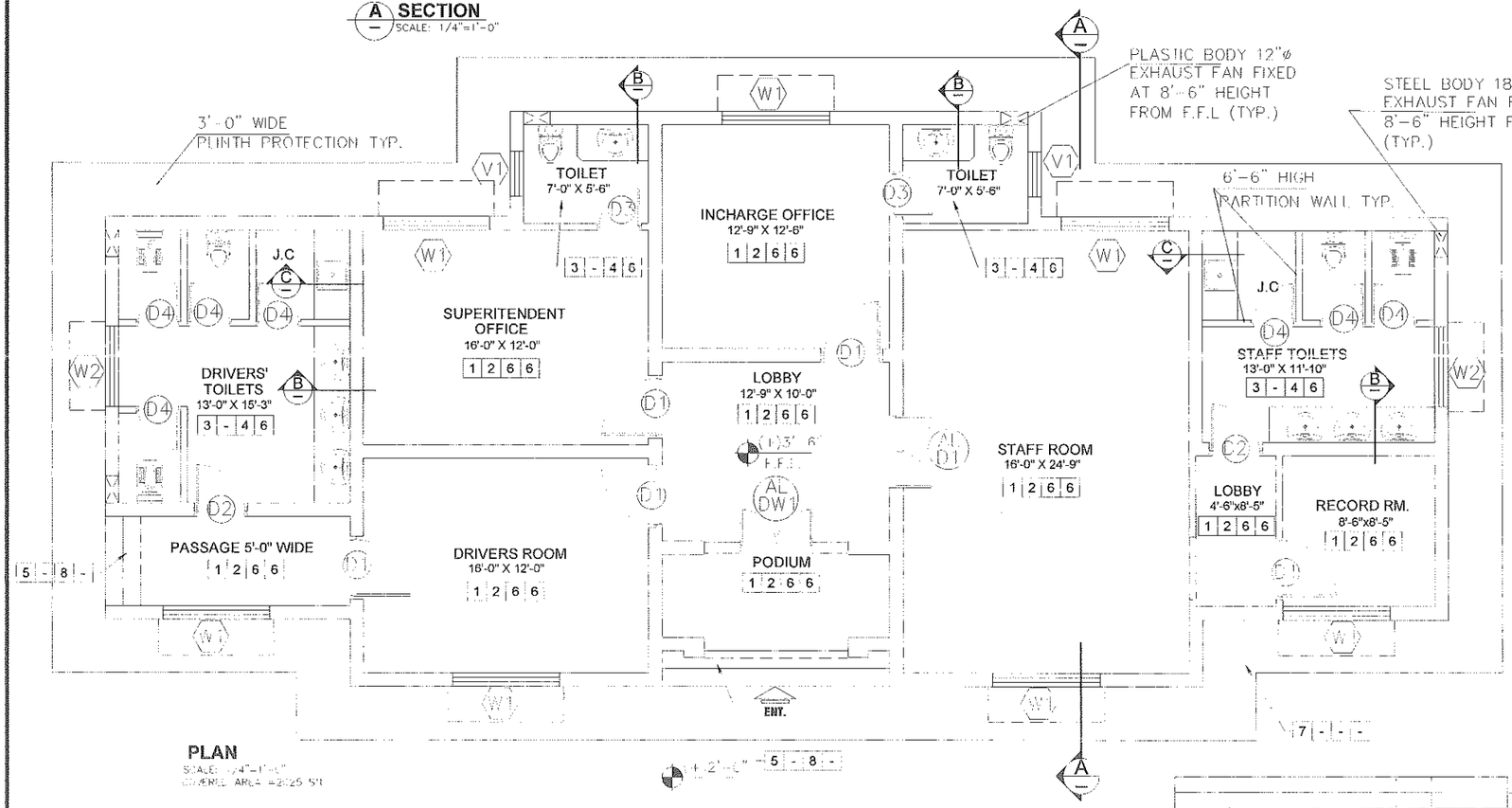

PLAN
SCALE: 1/4"=1'-0"
COVERED AREA 4625 SFT

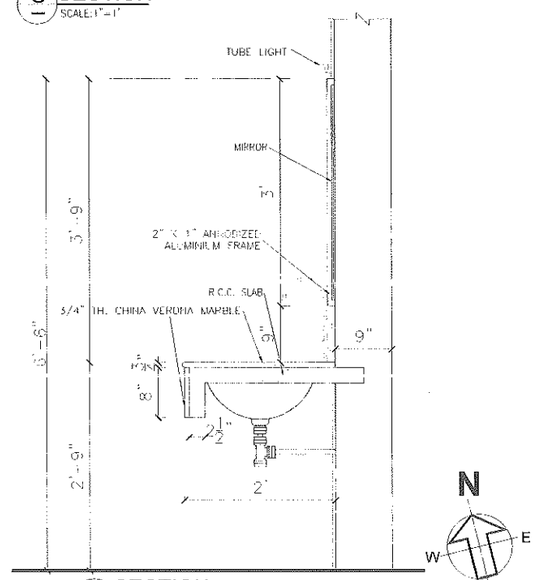

B SECTION
SCALE: 1"=1'

PROGRAM MANAGEMENT UNIT, PUNJAB INTERMEDIATE CITIES IMPROVEMENT INVESTMENT PROGRAM (PICIIP), LOCAL GOVERNMENT AND COMMUNITY DEVELOPMENT (LG & CD) DEPARTMENT, PUNJAB)

CONSULTING SERVICES FOR ENGINEERING, PROCUREMENT AND CONSTRUCTION MANAGEMENT (EPCM) CONSULTANT.

OFFICE BUILDING
MUBARAKPURA CAPITAL ROAD, SIALKOT
PLAN, ELEVATION & SECTION

NESPAK

DESN. NESPAK	RECOMMENDED	VER./CKD.	APPROVED
DWN. dilsher			
FILE	DATE	DRAWING NO.	REV.
CKD.	AUGUST, 2020	39/6/3/17/L/B02	0
SUBM.			

REFERENCE DRAWINGS	REV NO.	DATE	DESCRIPTION	BY	CKD.	APPR.

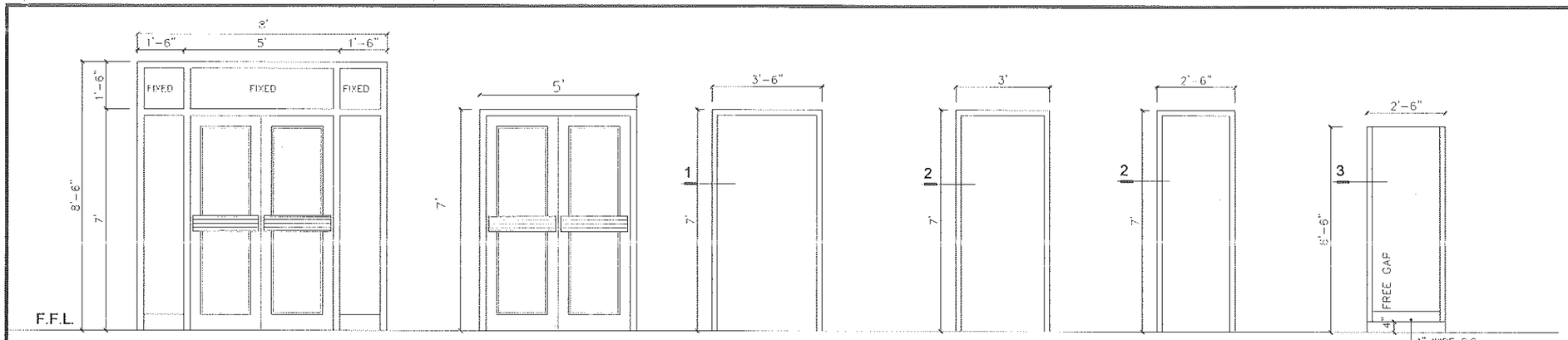

ALDW 1
ALUMINUM GLAZED DOOR WINDOW

ALD1
ALUMINUM OPENABLE GLASS DOOR

D1
SOLID CORE FLUSH DOOR
WITH DEODAR PLY BOTH SIDE
(POLISHED)

D2
SOLID CORE FLUSH DOOR
WITH DEODAR PLY OUTSIDE (POLISHED)
INSIDE (ENAMEL PAINTED)

D3
SOLID CORE FLUSH DOOR
WITH DEODAR PLY OUTSIDE (POLISHED)
INSIDE (ENAMEL PAINTED)

D4
SOLID CORE FLUSH DOOR
FORMICA PRESSED ON BOTH SIDES
OVER COMMERCIAL PLY.

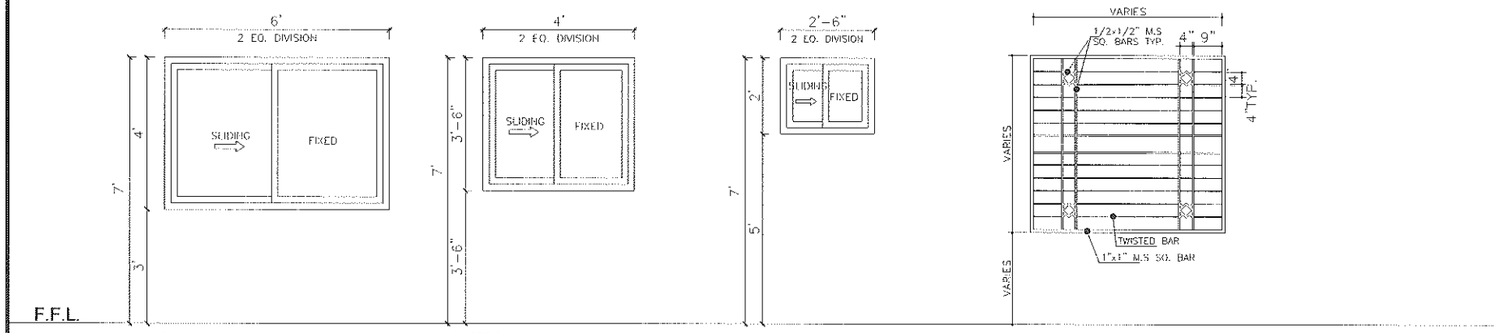

W 1
ALUMINUM GLAZED WINDOW

W 2
ALUMINUM GLAZED WINDOW

V1
ALUMINUM GLAZED VENTILATOR

TYPICAL DETAIL OF STEEL GRILL

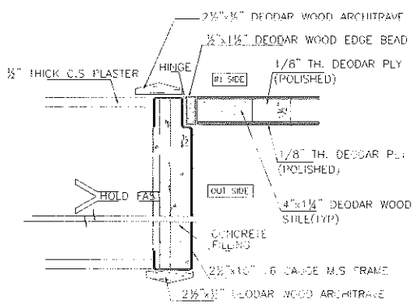

SECTION -1
SCALE 3" = 1'-0"

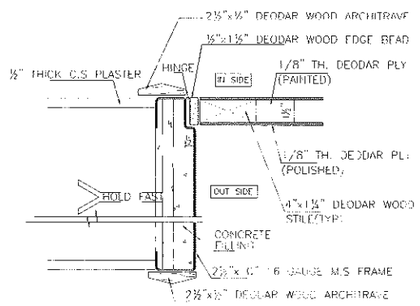

SECTION -2
SCALE 3" = 1'-0"

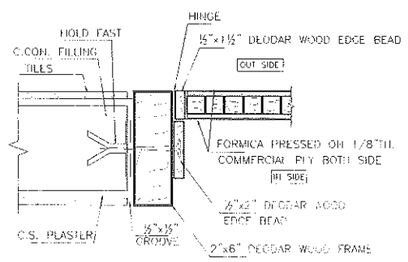

SECTION -3
SCALE 3" = 1'-0"

REFERENCE DRAWINGS	REV NO.	DATE	DESCRIPTION	BY	CKD.	APPR.

PROGRAM MANAGEMENT UNIT, PUNJAB INTERMEDIATE CITIES IMPROVEMENT INVESTMENT PROGRAM (PICIIP), LOCAL GOVERNMENT AND COMMUNITY DEVELOPMENT (LG & CD) DEPARTMENT, PUNJAB)

CONSULTING SERVICES FOR ENGINEERING, PROCUREMENT AND CONSTRUCTION MANAGEMENT (EPCM) CONSULTANT.

OFFICE BUILDING
MUBARAKPURA CAPITAL ROAD, SIALKOT
DOORS AND WINDOWS DETAILS

NESPAK

DESN. NESPAK	RECOMMENDED	VER/CKD.	APPROVED
DWN. dilsher			
FILE			
CKD.			
SUBM.	DATE AUGUST, 2020	DRAWING NO. 3976/3/ /TD/B03	REV. 0

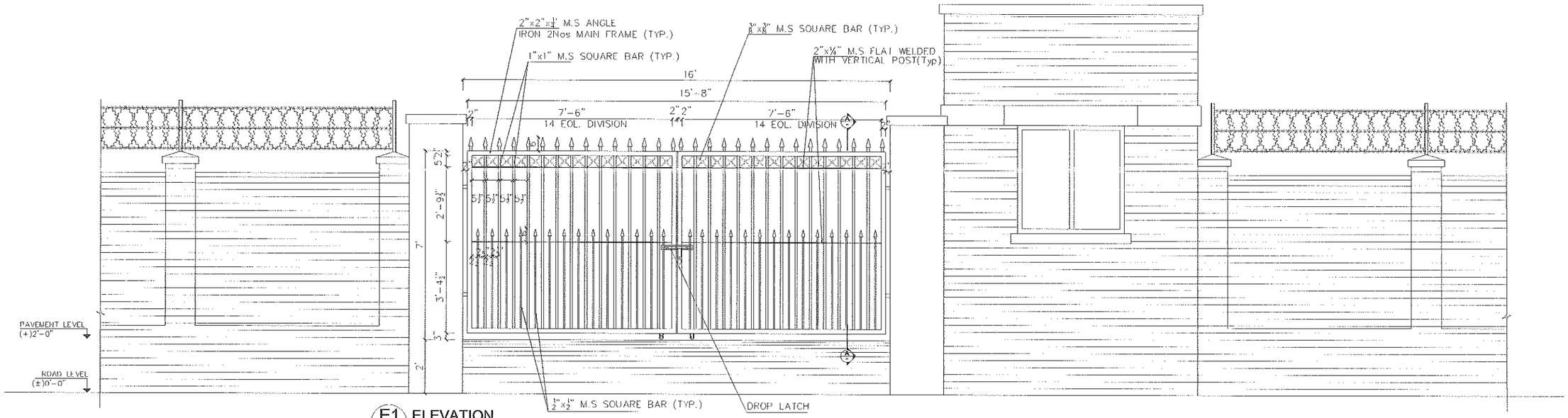

E1 ELEVATION
SCALE 1/2"=1'-0"

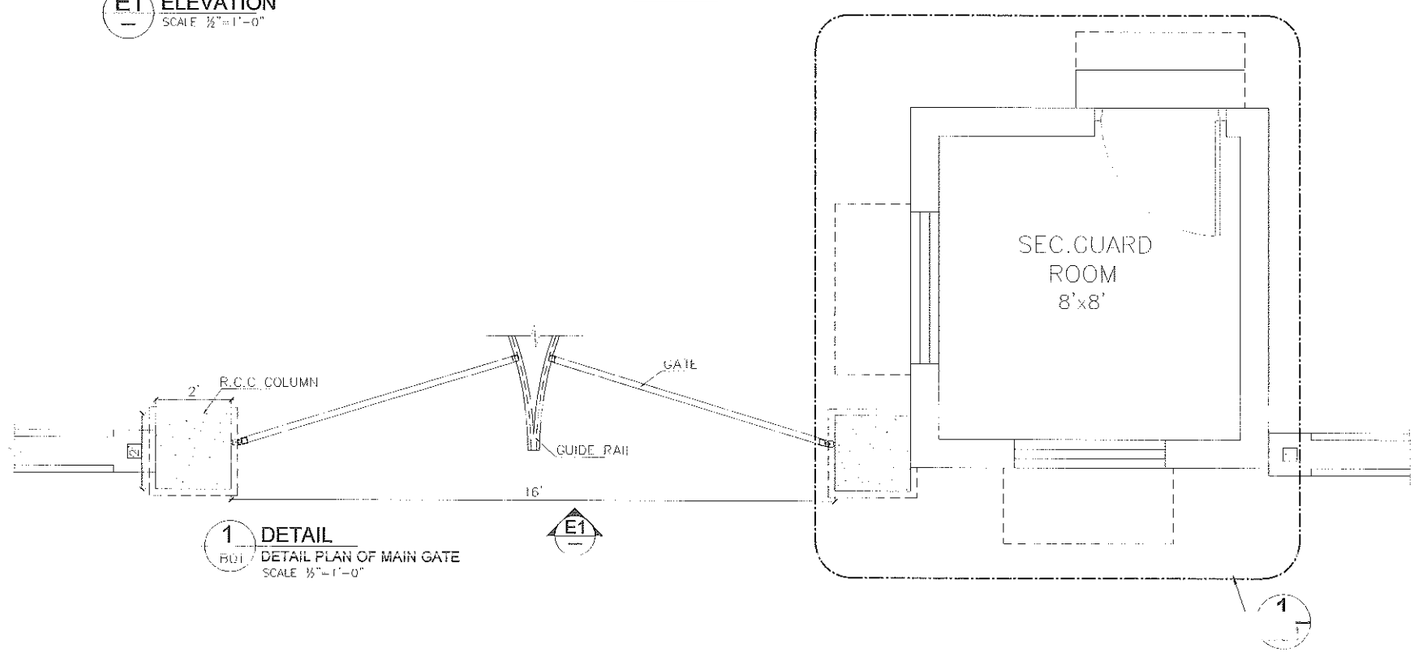

1 B01 DETAIL
DETAIL PLAN OF MAIN GATE
SCALE 1/2"=1'-0"

REFERENCE DRAWINGS	REV NO.	DATE	DESCRIPTION	BY	CKD.	APPR.

PROGRAM MANAGEMENT UNIT, PUNJAB INTERMEDIATE CITIES IMPROVEMENT INVESTMENT PROGRAM (PICIIP), LOCAL GOVERNMENT AND COMMUNITY DEVELOPMENT (LG & CD) DEPARTMENT, PUNJAB)

CONSULTING SERVICES FOR ENGINEERING, PROCUREMENT AND CONSTRUCTION MANAGEMENT (EPCM) CONSULTANT.

PARKING SHEDS & ALLIED STRUCTURES
MUBARAKPURA CAPITAL ROAD, SIALKOT
PLAN & ELEVATION OF MAIN GATE

NESPAK

DESN. NESPAK	RECOMMENDED	VER/CKD.	APPROVED
DWN. dilsher			
FILE	DATE	DRAWING NO.	REV.
CKD.			
SUBM.	JULY, 2020	3976/311/TO/B04	0

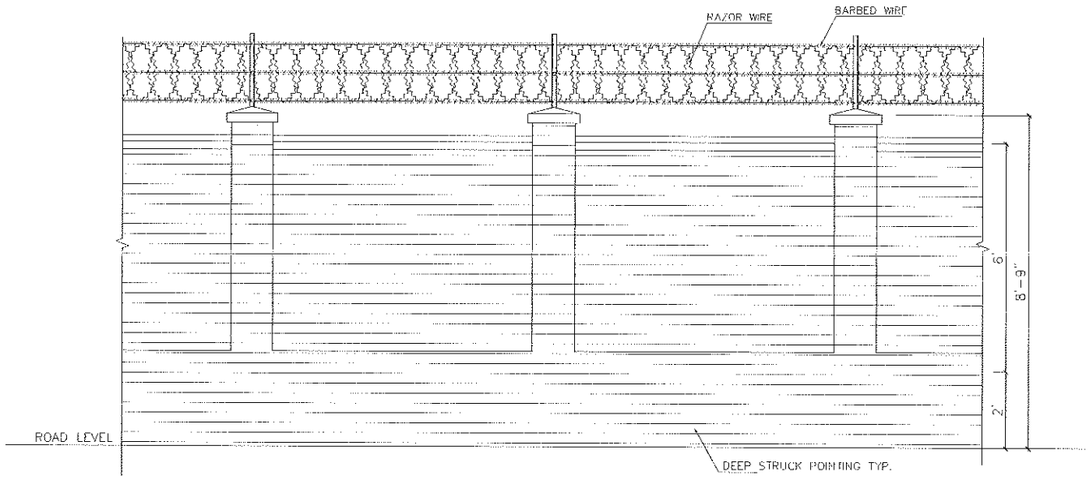

TYPICAL ELEVATION OF BOUNDARY WALL (OUT SIDE)
SCALE 3/8"=1'-0"

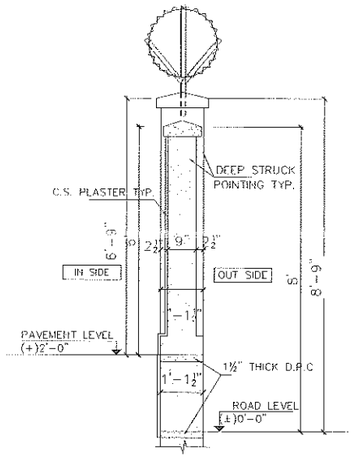

C SECTION (BOUNDARY WALL)

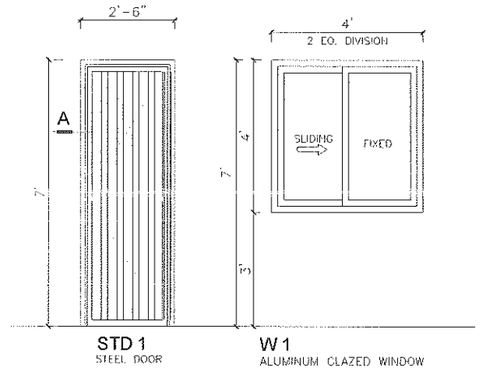

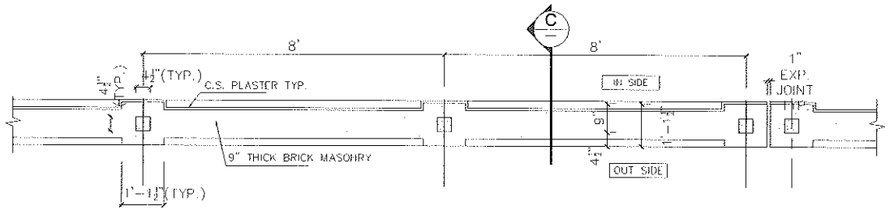

BOUNDARY WALL PLAN (TYP.)
SCALE 3/8"=1'-0"

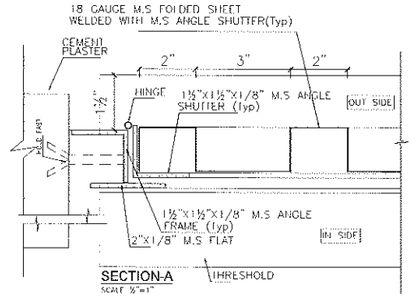

SECTION-A
SCALE ½"=1"

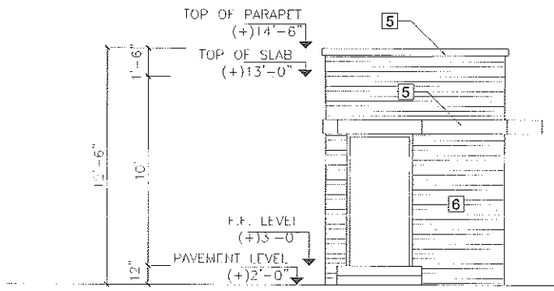

1 ELEVATION
SCALE: 1/4"=1'-0"

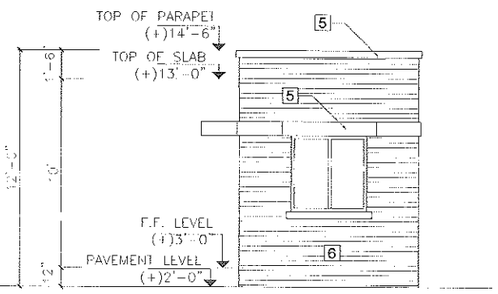

2 ELEVATION
SCALE: 1/4"=1'-0"

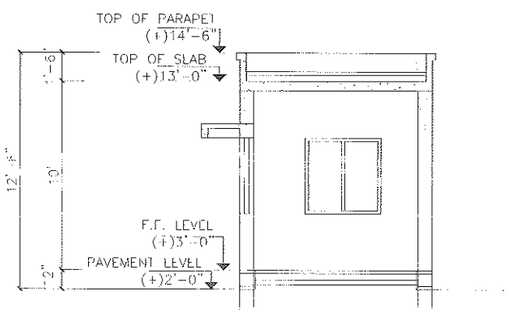

A SECTION
SCALE: 1/4"=1'-0"

SCHEDULE OF INTERNAL AND EXTERNAL FINISHES

LEGEND

SKIRTING | WALL
FLOOR | CEILING

1. 12"x12"x3/4" CHINA VERONA MARBLE
2. 4"X12"X3/4" CHINA VERONA MARBLE SKIRTING
3. VINYL EMULSION PAINT ON C.S PLASTER (APPROVED MAKE & SHADE)
4. 2" THICK P.C.C (1:2:4)
5. WEATHER SHIELD PAINT OF APPROVED (APPROVED MAKE & SHADE)
6. DEEP STRUCK POINTING OF CEMENT SURKHI

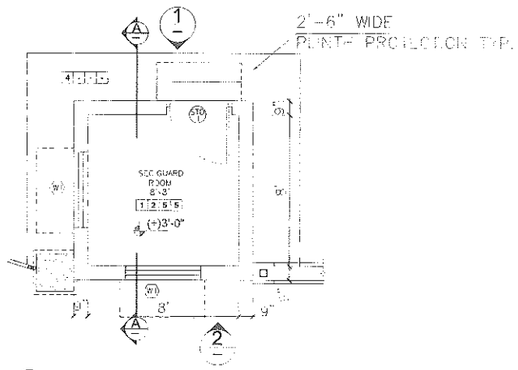

1 DETAIL PLAN
SEC.GUARD ROOM
SCALE: 1/4"=1'-0"

REFERENCE DRAWINGS	REV. NO.	DATE	DESCRIPTION	BY	CKD.	APPR.

PROGRAM MANAGEMENT UNIT, PUNJAB INTERMEDIATE CITIES IMPROVEMENT INVESTMENT PROGRAM (PICIIP), LOCAL GOVERNMENT AND COMMUNITY DEVELOPMENT (LG & CD) DEPARTMENT, PUNJAB)

CONSULTING SERVICES FOR ENGINEERING, PROCUREMENT AND CONSTRUCTION MANAGEMENT (EPCM) CONSULTANT.

PARKING SHEDS & ALLIED STRUCTURES
MUBARAKPURA CAPITAL ROAD, SIALKOT
DETAILS OF SEC.GUARD ROOM & BOUNDARY WALL

NESPAK

DESN. NESPAK	RECOMMENDED	VER./CKD.	APPROVED
DWN. dilsher			
FILE			
CKD.			
SUBM.			
DATE JULY, 2020	DRAWING NO. 39/6/311/PD/B05		REV. 0

GENERAL NOTES:

1. THIS DRAWING SHALL BE READ IN CONJUNCTION WITH ITEMS OF BILL OF QUANTITIES AND TECHNICAL SPECIFICATION
2. THIS DRAWING SHALL BE COORDINATED WITH OTHER DISCIPLINES WORKS FOR ROUTING, SPACING AND INSTALLATIONS
3. THE MINIMUM SIZE OF THE PVC CONDUIT SHALL BE 25mm (1") DIA.
4. LIGHT CIRCUIT WIRING SHALL BE WITH 3 x 2.5 mm Sq & LIGHT POINT WIRING SHALL BE WITH 3x1.5 mm. Sq SINGLE CORE STRANDED CU. PVC CABLES
5. ALL POWER SOCKETS (15/20Amp) SHALL BE WIRED WITH 3 x 6mm.Sq LIGHT PLUG (10/13Amp) SOCKETS FIRST POINT SHALL BE WIRED WITH 3 x 4mm.Sq & 10Amp. SOCKETS POINT TO POINT WIRED WITH 3 x 2.5mm. Sq STRANDED CU. PVC CABLES
6. ALL SINGLE CORE WIRES SHALL HAVE THE FOLLOWING COLOURS.
   PHASE WIRES..... RED, YELLOW & BLUE
   NEUTRAL WIRES.....BLACK
   C.P.C.....GREEN/YELOW (AS PER B.O.Q)
7. THE WIRING SHALL BE STARTED ONLY AFTER THE CONDUIT SYSTEM IS COMPLETELY INSTALLED AND ALL OUTLET BOXES ETC. ARE FIXED IN THEIR POSITIONS.
8. ALL POWER/LIGHT PLUG SOCKETS WIRING SHALL BE SEGREGATED AND HAVE INDEPENDENT WIRES RIGHT FROM MINIATURE CIRCUIT BREAKERS IN DISTRIBUTION BOARD.
9. ACTUAL LOCATION OF ALL OUTLETS MUST BE VERIFIED BY THE CONTRACTOR SITE ENGINEER BEFORE INSTALLATION COMMENCES
10. THE MOUNTING HEIGHT OF THE SOCKET OUTLETS SHALL BE MINIMUM 300mm (FFL)
11. THE MOUNTING HEIGHT OF THE LIGHTING SWITCHES SHALL BE MINIMUM 1100mm (FFL)
12. NO LUBRICATION EXCEPT AS RECOMMENDED BY MANUFACTURER SHALL BE USED ON WIRES FOR REDUCING FRICTION. NO OIL OR SOAP OF ANY KIND WILL BE ALLOWED ON WIRES FOR THIS PURPOSE.
13. THE CONTRACTOR SHALL SUBMIT CONDUITS LAYOUT PLAN BASED UPON THE ELECTRIFICATION DRAWINGS FOR THE APPROVAL OF ELECTRICAL ENGINEER, BEFORE POURING OF ROOF SLABS, WALL AND COLUMNS.
14. ALL THE ELECTRICAL WORKS SHALL BE EXECUTED IN STRICT ACCORDANCE WITH THE PROJECT SPECIFICATION
15. THE ELECTRICAL EQUIPMENT SHALL BE SUPPLIED FROM APPROVED MANUFACTURER AS PER APPLICABLE STANDARDS AND CODES

LEGEND

SYMBOL	DESCRIPTION
	MAIN PANEL BOARD(MPB)
	SUB MAIN PANEL BOARD(SMPB)
	DISTRIBUTION BOARD (DB)
	MOULDED CASE CIRCUIT BREAKER
V	VOLTMETER
A	AMMETER
	SELECTOR SWITCH
	WALL BRACKET FAN
	EXHAUST FAN
	SINGLE POLE 1-WAY SWITCH
	15/20 AMP 3 PIN SINGLE PHASE, NEUTRAL & EARTH SWITCH SOCKET UNIT (AWAY FROM SWITCH BOARD)
	10/13 AMPS 3 PIN SINGLE PHASE SWITCH SOCKET UNIT (AWAY FROM SWITCH BOARD)

LIGHTING FITTINGS SCHEDULE

SYMBOL	DESCRIPTION
	WALL BRACKET 18W LED LIGHT
	BATTEN SURFACE MOUNTED 18W LED LIGHT
	BATTEN SURFACE MOUNTED 10W LED LIGHT ABOVE MIRROR
	WATER TIGHT 20W IP65 LED LIGHT
	SURFACE MOUNTED DOWN LIGHTER 18W LED LIGHT

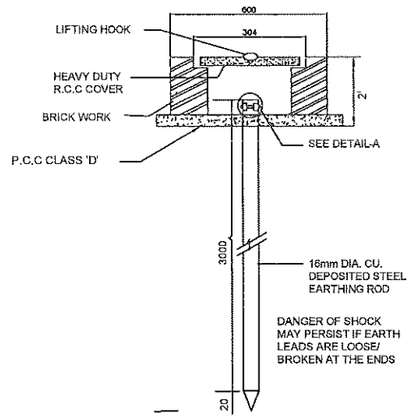

ROD TYPE EARTH POINT DETAIL FOR DB,S

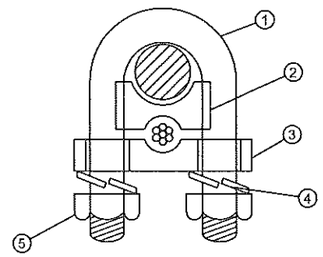

DETAIL -'A'

ITEM NO.	ITEM NAME	MATERIAL
1	U-BOLT	MILD STEEL
2	SPACER	CAST IRON
3	BASE	MILD STEEL
4	SPRING WASHER	CARBON STEEL
5	NUT	MILD STEEL

REFERENCE DRAWINGS	REV NO.	DATE	DESCRIPTION	BY	CKD.	APPR.

PROGRAM MANAGEMENT UNIT, PUNJAB INTERMEDIATE CITIES IMPROVEMENT INVESTMENT PROGRAM (PICIIP), LOCAL GOVERNMENT AND COMMUNITY DEVELOPMENT (LG & CD) DEPARTMENT, PUNJAB)

CONSULTING SERVICES FOR ENGINEERING, PROCUREMENT AND CONSTRUCTION MANAGEMENT (EPCM) CONSULTANT.

PARKING SHEDS & ALLIED STRUCTURES
MUBARAKPURA CAPITAL ROAD, SIALKOT
LEGEND, GENERAL NOTES LIGHTING FITTING FOR SHEDULE & EARTH POINT DETAILS

NESPAK

DESN. NESPAK
DWN. SA
FILE
CKD.
SUBM.

RECOMMENDED | VER./CKD. | APPROVED

DATE SEP. 2020 | DRAWING NO. 3976/161/TD/5E001 | REV. 0

LEGEND:

SYMBOL	DESCRIPTION
	INDICATING LIGHT
	CURRENT TRANSFORMER
	MOULDED CASE CIRCUIT BREAKER
	VOLT METER WITH SELECTOR SWITCH & FUSE
	AMMETER WITH SELECTOR SWITCH & FUSE

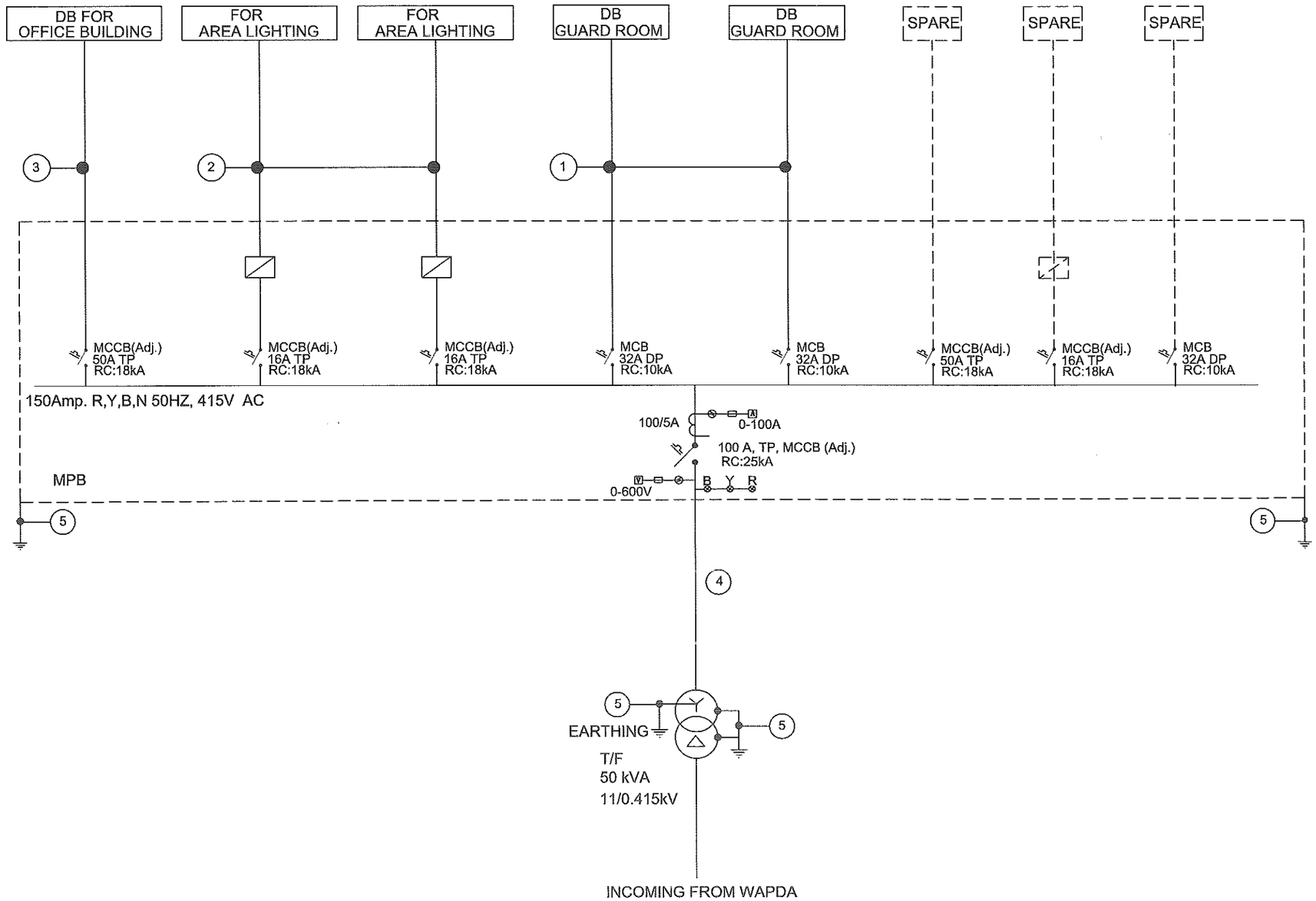

LEGEND:

1. 2 CORE 10 mm2 Cu./PVC/PVC+ 1 Core 10 mm2 Cu./PVC AS (CPC).
2. 4 CORE 10 mm2 Cu./PVC/PVC+ 1 Core 10 mm2 Cu./PVC AS (CPC).
3. 4 CORE 25 mm2 Cu./PVC/PVC+ 1 Core 16 mm2 Cu./PVC AS (CPC).
4. 4 CORE 50 mm2 Cu./PVC/PVC+ 1 Core 25 mm2 Cu./PVC AS (CPC).
5. 1 Core 25 mm2 Cu./PVC AS (CPC/ECC).

NOTES:-

1. THIS DRAWING IS FOR INDICATIVE DESIGN MODEL AND SHALL BE READ IN CONJUNCTION WITH ALL OTHER DRAWINGS, SPECIFICATIONS AND ITEMS OF BILL OF QUANTITIES.
2. THE CONTRACTOR SHALL BE SUBMITTED SHOP DRAWINGS, VOLTAGE DROP CALCULATION TO THE ENGINEER AT THE TIME OF CONTRACT AWARD AND BEFORE THE WORK COMMENCES AT SITE.
3. THE ELECTRICAL WORKS SHALL BE EXECUTED IN LINE WITH THE PROJECT SPECIFICATIONS
4. THE PUMPING STATION EQUIPMENT ALONG WITH MOTORS, MOTOR CONTROL CENTERS/MOTOR CONTROL UNITS AND ASSOCIATED STARTING DEVICES ARE NOT INCLUDED IN ELECTRICAL SCOPE OF WORK.
5. THE LOCATION OF THE EQUIPEMENTS SHOWN ON THE LAYOUT PLAN IS TENTATIVE LOCATION. LOCATION OF THE TRANSFORMER, DG SETS & PANEL BOARD SHALL BE FINALIZED AT PER SITE CONDITION.

REFERENCE DRAWINGS	REV NO.	DATE	DESCRIPTION	BY	CKD.	APPR.

PROGRAM MANAGEMENT UNIT, PUNJAB INTERMEDIATE CITIES IMPROVEMENT INVESTMENT PROGRAM (PICIIP), LOCAL GOVERNMENT AND COMMUNITY DEVELOPMENT (LG & CD) DEPARTMENT, PUNJAB)

CONSULTING SERVICES FOR ENGINEERING, PROCUREMENT AND CONSTRUCTION MANAGEMENT (EPCM) CONSULTANT.

PARKING SHEDS & ALLIED STRUCTURES
MUBARAKPURA CAPITAL ROAD, SIALKOT
SINGLE LINE DIAGRAM

NESPAK

DESN. NESPAK	RECOMMENDED	VER./CKD.	APPROVED
DWN. SA			
FILE			
CKD.			
SUBM.	DATE SEP. 2020	DRAWING NO. 3976/161/TD/5E002	REV. 0

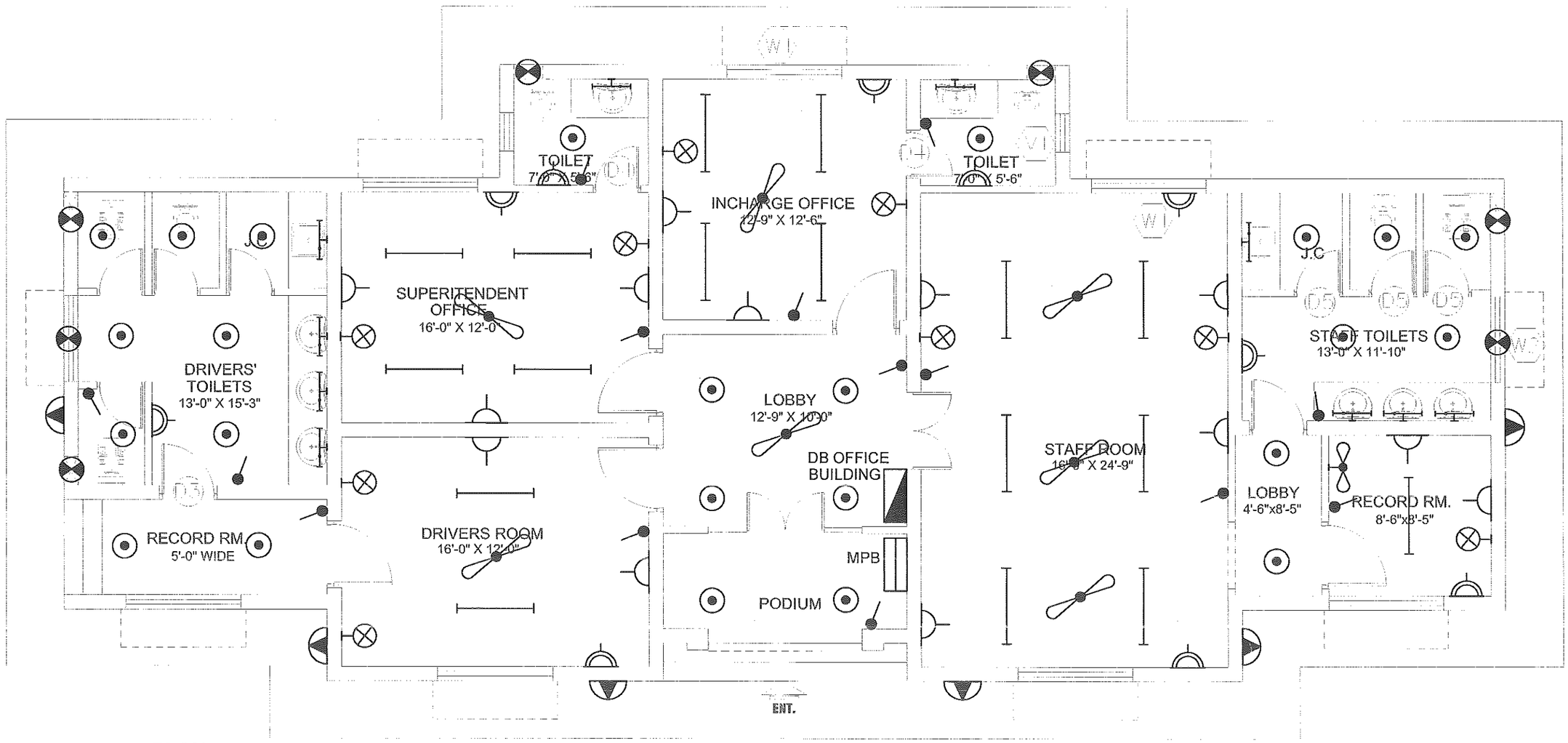

PLAN

REFERENCE DRAWINGS	REV NO.	DATE	DESCRIPTION	BY	CKD.	APPR.

PROGRAM MANAGEMENT UNIT, PUNJAB INTERMEDIATE CITIES IMPROVEMENT INVESTMENT PROGRAM (PICIIP), LOCAL GOVERNMENT AND COMMUNITY DEVELOPMENT (LG & CD) DEPARTMENT, PUNJAB)

CONSULTING SERVICES FOR ENGINEERING, PROCUREMENT AND CONSTRUCTION MANAGEMENT (EPCM) CONSULTANT.

PARKING SHEDS & ALLIED STRUCTURES
MUBARAKPURA CAPITAL ROAD, SIALKOT
OFFICE BUILDING ELECTRIFICATION LAYOUT PLAN

NESPAK

		RECOMMENDED	VER./CKD.	APPROVED
DESN.	NESPAK			
DWN.	SA			
FILE				
CKD.				
SUBM.				

DATE	DRAWING NO.	REV.
SEP. 2020	3976/161/TD/5E003	0

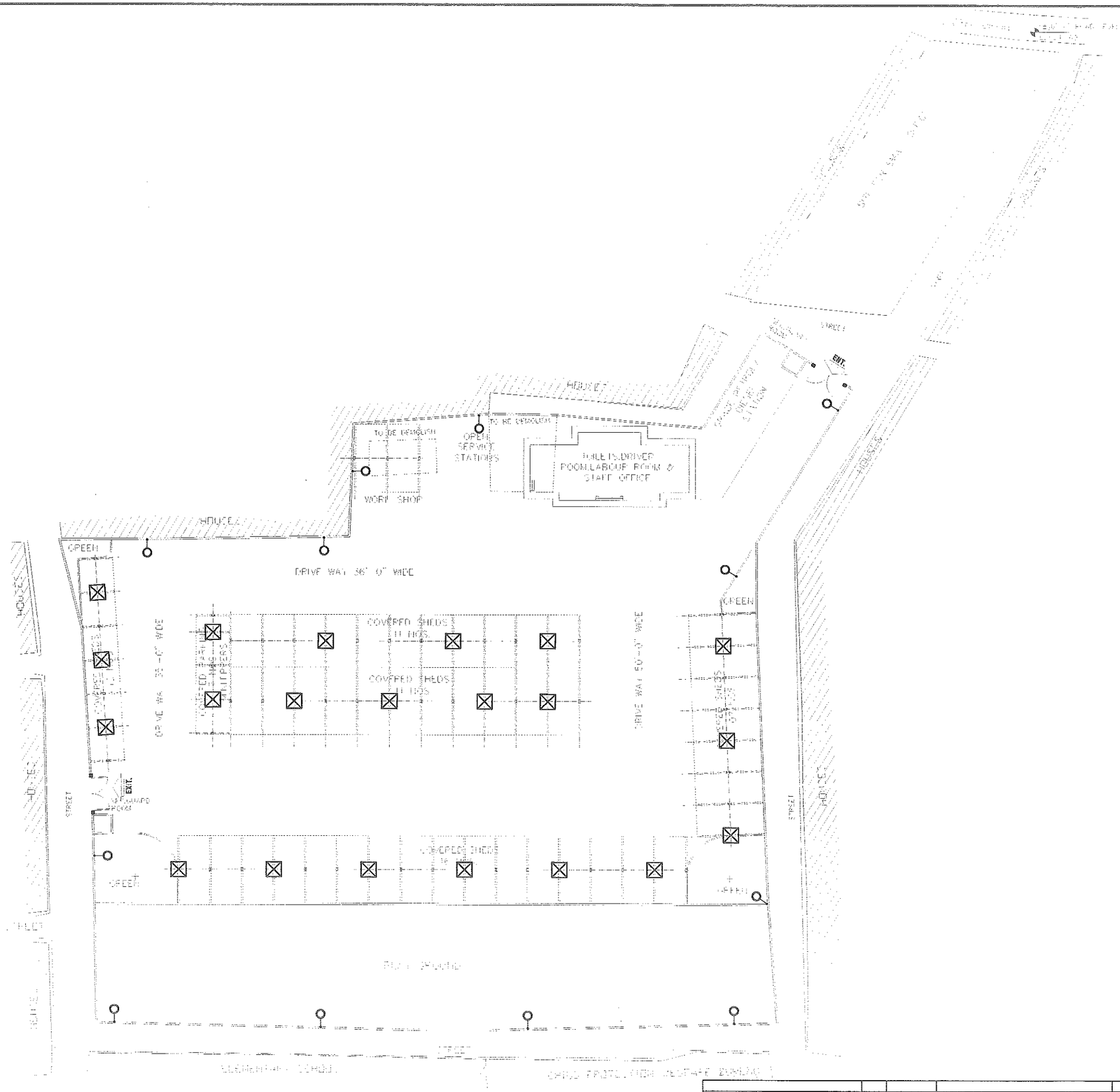

LEGEND:-	
SYMBOL	DESCRIPTION
	10 METER HIGH SINGLE ARM WITH 90W LUMINAIRE HOT DIP GALVANIZED STEEL OCTAGONAL POLE
	LED FLOOD LIGHT 30W (IP-65) WITH COMPLETE
	LED GATE LIGHT 100W (IP-65) WITH COMPLETE

PROGRAM MANAGEMENT UNIT, PUNJAB INTERMEDIATE CITIES IMPROVEMENT INVESTMENT PROGRAM (PICIIP), LOCAL GOVERNMENT AND COMMUNITY DEVELOPMENT (LG & CD) DEPARTMENT, PUNJAB)

CONSULTING SERVICES FOR ENGINEERING, PROCUREMENT AND CONSTRUCTION MANAGEMENT (EPCM) CONSULTANT.

PARKING SHEDS & ALLIED STRUCTURES
MUBARAKPURA CAPITAL ROAD, SIALKOT
AREA LIGHTING LAYOUT PLAN

NESPAK

DESN.	NESPAK	RECOMMENDED	VER./CKD.	APPROVED	
DWN.	SA				
FILE					
CKD.		DATE	DRAWING NO.		REV.
SUBM.		SEP. 2020	3976/161/TD/5E004		0

REFERENCE DRAWINGS	REV NO.	DATE	DESCRIPTION	BY	CKD.	APPR.

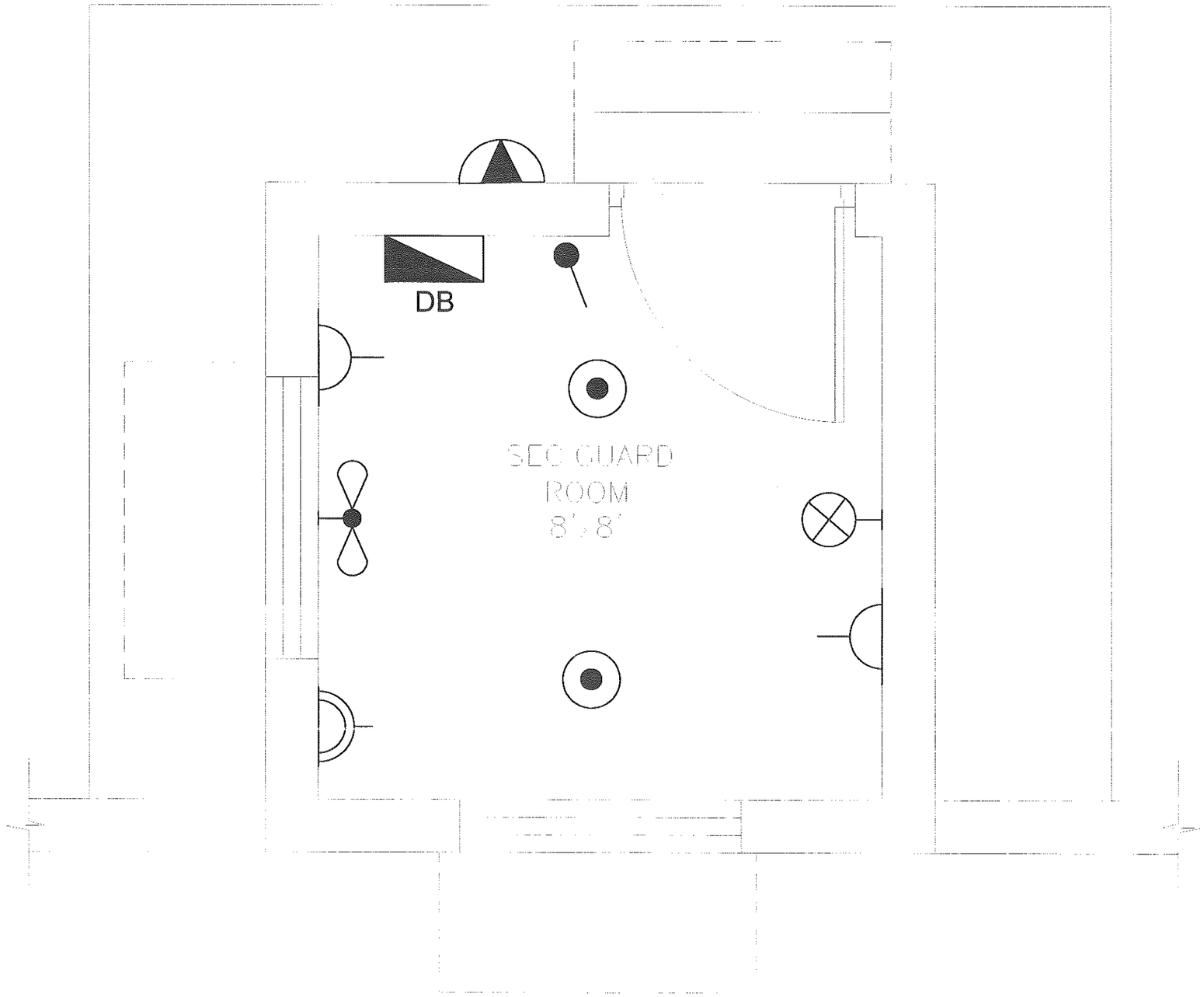

REFERENCE DRAWINGS	REV NO.	DATE	DESCRIPTION	BY	CKD.	APPR.

PROGRAM MANAGEMENT UNIT, PUNJAB INTERMEDIATE CITIES IMPROVEMENT INVESTMENT PROGRAM (PICIIP), LOCAL GOVERNMENT AND COMMUNITY DEVELOPMENT (LG & CD) DEPARTMENT, PUNJAB)

CONSULTING SERVICES FOR ENGINEERING, PROCUREMENT AND CONSTRUCTION MANAGEMENT (EPCM) CONSULTANT.

PARKING SHEDS & ALLIED STRUCTURES
MUBARAK ROAD, CAPITAL ROAD, SIALKOT
GUARD ROOM ELECTRIFICATION LAYOUT PLAN

NESPAK

DESN. NESPAK	RECOMMENDED	VER./CKD.	APPROVED
DWN. SA			
FILE			
CKD.			
SUBM.	DATE SEP. 2020	DRAWING NO. 3976/161/TD/5E005	REV. 0

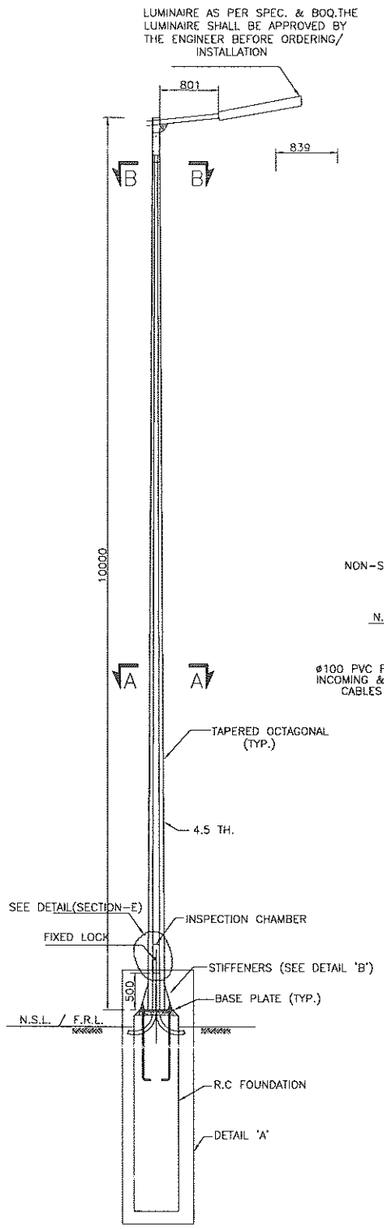

SINGLE LUMINAIRE HOT DIP GALVANIZED STEEL OCTAGONAL POLE

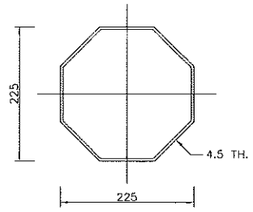

SECTION A–A

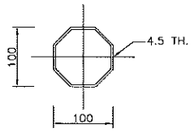

SECTION B–B

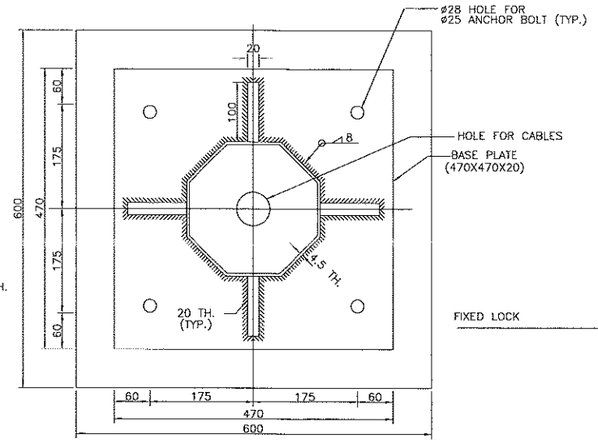

SECTION C–C

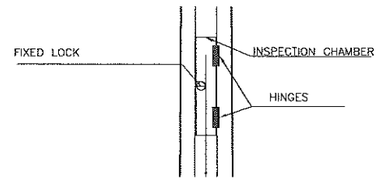

SECTION–E

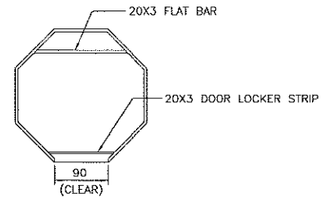

SECTION D–D

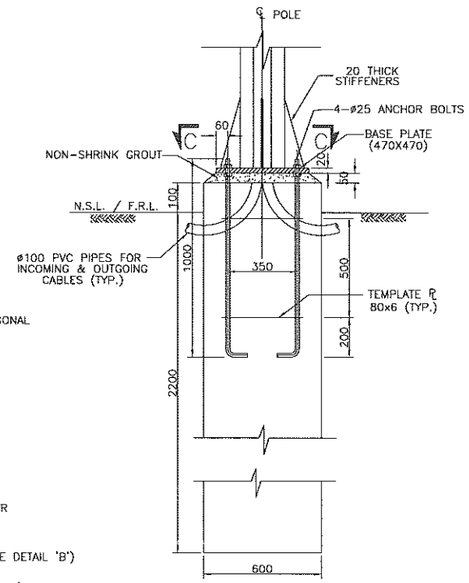

DETAIL–A
(CONCRETE OUTLINE)

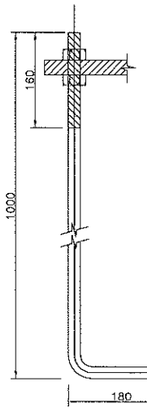

ANCHOR BOLT

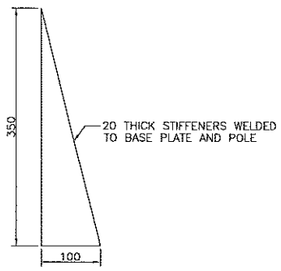

DETAIL–B

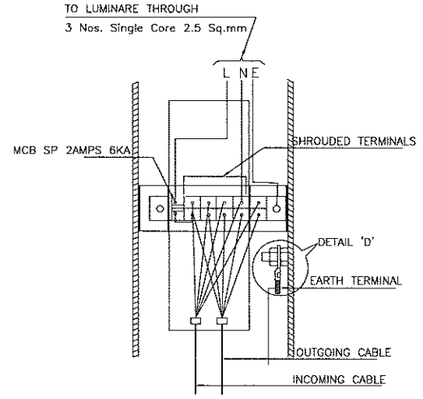

DETAIL OF INSPECTION CHAMBER

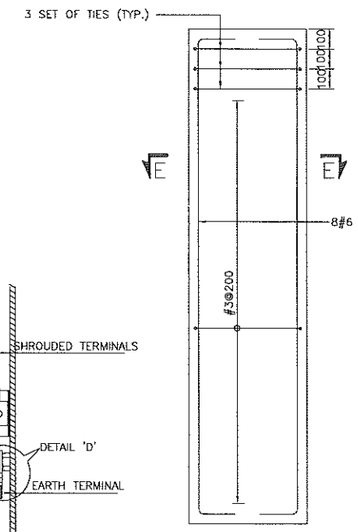

FOUNDATION
(REINFORCEMENT)

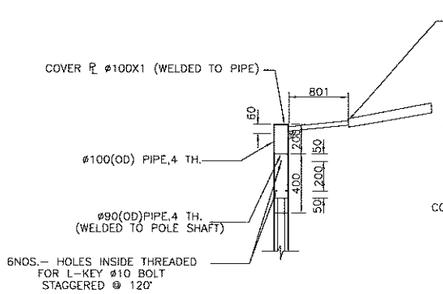

DETAIL–C

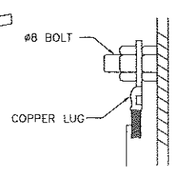

DETAIL–D

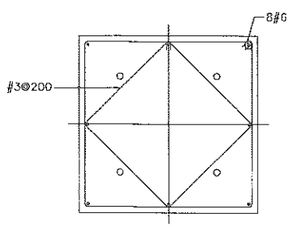

SECTION E–E

NOTES

1. FOR GENERAL NOTES REFER DRAWING NO. G001.
2. ALL DIMENSIONS ARE IN MILLIMETERS UNLESS OTHERWISE SPECIFIED.
3. UNLESS OTHERWISE NOTED, CONCRETE SHALL BE CLASSIFIED AS FOLLOWS.
   CONCRETE CLASS 28 DAYS (15x30 CM) CYLINDER STRENGTH Kg/sq. Cm
   REINFORCED A 210 (3000 psi)
4. THE STEEL FOR POLE & BASE PLATE SHALL BE OF YIELD STRENGTH OF 350MPa(50Ksi). & SHALL CONFORM TO ASTM A36 STEEL.
5. THE ANCHOR BOLTS SHALL CONFORM TO ASTM A307.
6. ALL WELDING SHALL CONFORM TO THE APPLICABLE PROVISIONS OF A.W.S (AMERICAN WELDING SOCIETY) CODE.
7. HOT DIP GALVANIZATION SHALL CONFORM TO BS EN ISO 1461 (IN SIDE & OUT SIDE) OR IN ACCORDANCE WITH ASTM A123 AND A325.

PROGRAM MANAGEMENT UNIT, PUNJAB INTERMEDIATE CITIES IMPROVEMENT INVESTMENT PROGRAM (PICIIP), LOCAL GOVERNMENT AND COMMUNITY DEVELOPMENT (LG & CD) DEPARTMENT, PUNJAB)

CONSULTING SERVICES FOR ENGINEERING, PROCUREMENT AND CONSTRUCTION MANAGEMENT (EPCM) CONSULTANT.

PARKING SHEDS AND ALLIED STRUCTURES
MUBARAKPURA CAPITAL ROAD, SIALKOT
DETAILS OF 10M CONICAL OCTAGONAL LIGHTING POLE SINGLE ARM

NESPAK

REFERENCE DRAWINGS	REV NO.	DATE	DESCRIPTION	BY	CKD.	APPR.

DESN. NESPAK	RECOMMENDED	VER./CKD.	APPROVED
DWN. SA			
FILE			
CKD.			
SUBM.			

DATE	DRAWING NO.	REV.
SEP. 2020	3976/161/TD/5E.006	0

GENERAL NOTES (CCTV) SYSTEMS:

1. ALL DRAWING SHALL BE READ IN CONJUNCTION WITH ITEMS OF BILL OF QUANTITIES AND TECHNICAL SPECIFICATIONS.
2. THE CONTRACTOR SHALL PROCURE, TRANSPORT AND DELIVER EQUIPMENTS AND HARDWARE TO SITE, AFTER APPROVAL OF ENGINEERS.
3. All CCTV WORKS SHALL COMPLY WITH LATEST STANDARDS.
4. ALL CCTV SYSTEM DRAWING SHALL BE COORDINATED WITH OTHER DISCIPLINES WORKS FOR ROUTING, SPACING AND INSTALLATIONS.
5. THE MINIMUM SIZE OF INDOOR PVC CONDUIT SHALL BE 25mm (1") DIA.
6. ACTUAL LENGTH OF DUCT TRAY SHALL BE AS PER SITE REQUIREMENTS.

8. SUITABLE SEALENT SHALL BE USED AT THE ENDS AND IN JOINTS OF THE DUCT FOR PROTECTION FROM WATER AND RODENT.

10. ACTUAL LOCATION OF ALL CONDUITS MUST BE VERIFIED BY THE CONTRACTOR SITE ENGINEER BEFORE INSTALLATION COMMENCES.

11.THE CONTRACTOR SHALL SUBMIT SHOP DRAWINGS AND CONDUITS LAYOUT PLAN FOR ENGINEER APPROVAL BEFORE INSTALLATION

12.ALL THE CCTV WORKS SHALL BE EXECUTED IN STRICT COMPLIANCE WITH THE PROJECT SPECIFICATION.

13.THE CCTV EQUIPMENT SHALL BE SUPPLIED FROM APPROVED MANUFACTURER AND APPLICABLESTANDARDS AND CODES. AS MENTIONED IN TECHNICAL SPECIFICATION.

14. THE CONTRACTOR SHALL SUBMIT CO-ORDINATION SHOP DRAWING OF COMMUNICATION LAYOUT WITH POWER LAYOUT BEFORE EXECUTION OF WORKS.

15. EXACT LOCATION OF ALL CCTV EQUIPMENT SHALL BE DECIDED ON SITE.

16. MANUFACTURER'S RECOMMENDATIONS SHALL BE FOLLOWED FOR INSTALLATION OF ALL CCTV SYSTEMS.

17. All CCTV EQUIPMENT THAT MAY EXPOSE TO WEATHER CONDITIONS SHALL BE WEATHER PROOF.

18.THE CONTRACTOR SHALL COORDINATE AT SITE WITH OTHER SERVICES FOR EXACT LOCATION AND POSITION OF CONDUITS AND COMMUNICATION EQUIPMENT

19. WHERE CABLES ENTER THE BUILDING, THESE SHALL BE LAID IN CLASS D PROTECTIVE PIPE. HAND HOLES SHALL BE PROVIDED OUTSIDE THE BUILDING

20. THE CONTRACTOR SHALL BE RESPONSIBLE FOR GENERAL INTEGRATION FOR ALL KIND OF SUB-SYSTEMS AND COMMUNICATION EQUIPMENT WITHIN THE SCOPE OF WORK INCLUDING INTERFACE WITH OTHER SYSTEMS.

21. EN 50174-2 RECOMMENDATION SHALL BE FOLLOWED FOR SEPARATION DISTANCE BETWEEN POWER AND COMMUNICATION CABLES.

22. LENGTH OF CAT-6 CABLE MUST NOT EXCEED 90M.

23. THESE DRAWINGS ARE FOR TENDER PURPOSE AND SHALL NOT BE USED FOR CONSTRUCTION.

REFERENCE DRAWINGS	REV NO.	DATE	DESCRIPTION	BY	CKD.	APPR.

PROGRAM MANAGEMENT UNIT, PUNJAB INTERMEDIATE CITIES IMPROVEMENT INVESTMENT PROGRAM (PICIIP), LOCAL GOVERNMENT AND COMMUNITY DEVELOPMENT (LG & CD) DEPARTMENT, PUNJAB)

CONSULTING SERVICES FOR ENGINEERING, PROCUREMENT AND CONSTRUCTION MANAGEMENT (EPCM) CONSULTANT.

PARKING SHEDS MUBARAKPURA, CAPITAL ROAD,SIALKOT
OFFICE BUILDING
IP BASED VIDEO SURVEILLANCE SYSTEM

NESPAK

DESN. NESPAK	RECOMMENDED	VER./CKD.	APPROVED
DWN. MUBASHAR AHMAD			
FILE			
CKD.			
SUBM.	DATE SEP. 2020	DRAWING NO. 3976/166/ED/ISO01	REV. 0

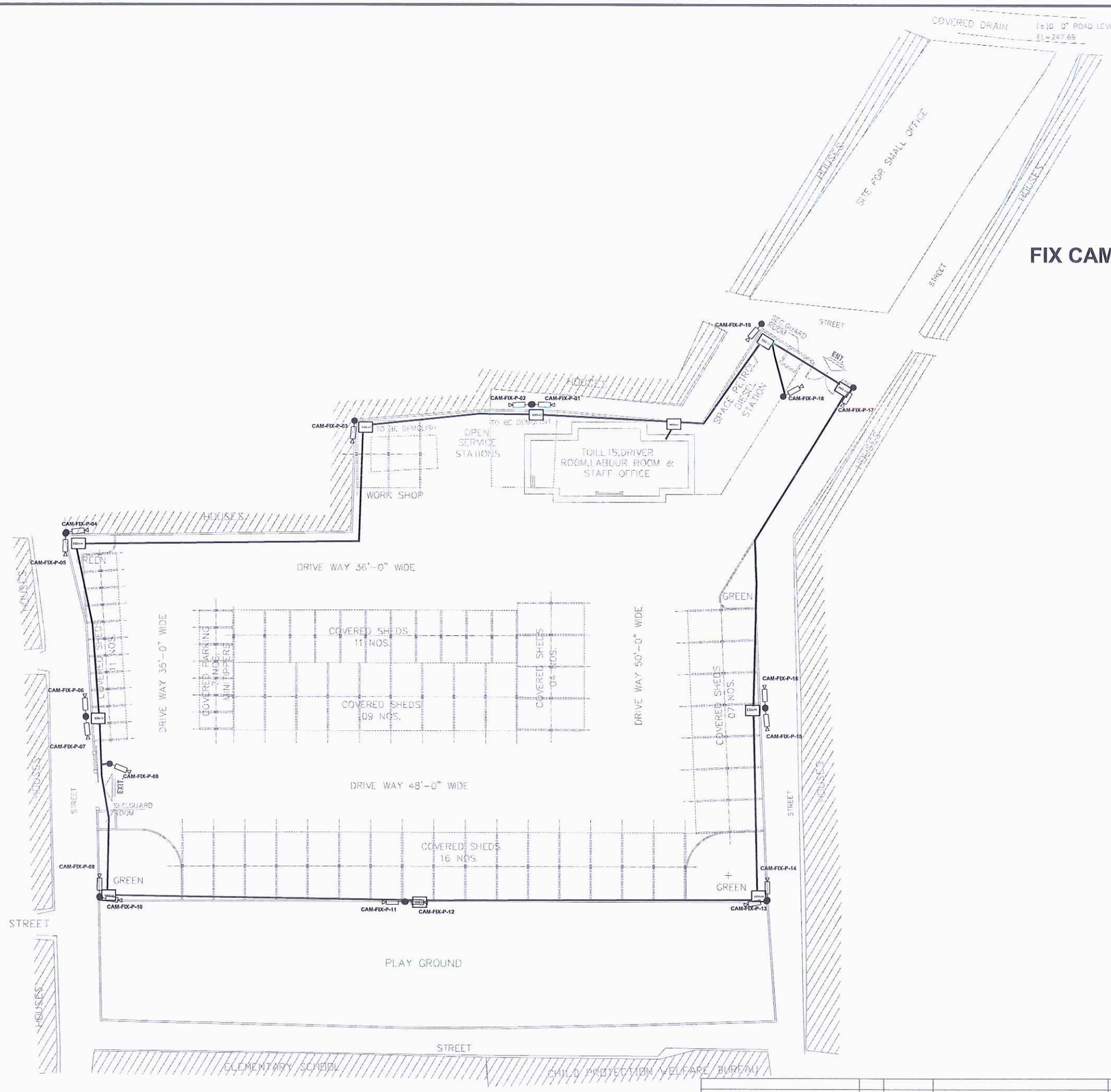

LEGEND

FIX CAMERA WITH POLE

DUCT

HAND HOLE HH-XX

N
W E
S

REFERENCE DRAWINGS	REV NO.	DATE	DESCRIPTION	BY	CKD.	APPR.

PROGRAM MANAGEMENT UNIT, PUNJAB INTERMEDIATE CITIES IMPROVEMENT INVESTMENT PROGRAM (PICIIP), LOCAL GOVERNMENT AND COMMUNITY DEVELOPMENT (LG & CD) DEPARTMENT, PUNJAB)

CONSULTING SERVICES FOR ENGINEERING, PROCUREMENT AND CONSTRUCTION MANAGEMENT (EPCM) CONSULTANT.

PARKING SHEDS MUBARAKPURA, CAPITAL ROAD,SIALKOT
OFFICE BUILDING
IP BASED VIDEO SURVEILLANCE SYSTEM

NESPAK

DESN. NESPAK	RECOMMENDED	VER./CKD.	APPROVED
DWN. MUBASHAR AHMAD			
FILE			
CKD.	DATE SEP. 2020	DRAWING NO. 3976/166/TD/IS002	REV. 0
SUBM.			

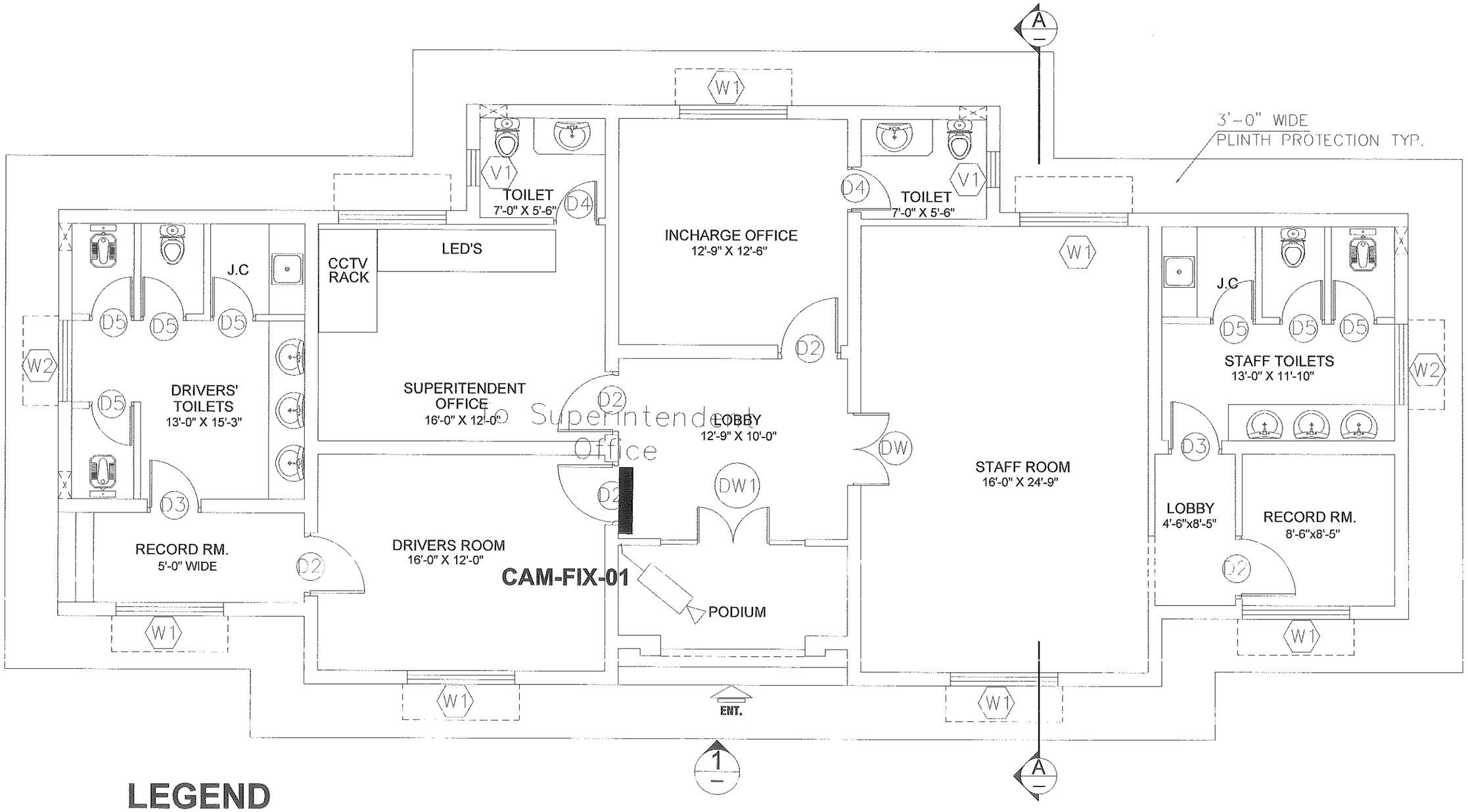

LEGEND

FIX CAMERA WALL MOUNTED

HAND HOLE HH-XX

DUCT

REFERENCE DRAWINGS	REV. NO.	DATE	DESCRIPTION	BY	CKD.	APPR

PROGRAM MANAGEMENT UNIT, PUNJAB INTERMEDIATE CITIES IMPROVEMENT INVESTMENT PROGRAM (PICIIP), LOCAL GOVERNMENT AND COMMUNITY DEVELOPMENT (LG & CD) DEPARTMENT, PUNJAB)

CONSULTING SERVICES FOR ENGINEERING, PROCUREMENT AND CONSTRUCTION MANAGEMENT (EPCM) CONSULTANT.

PARKING SHEDS MUBARAKPURA, CAPITAL ROAD,SIALKOT
OFFICE BUILDING
IP BASED VIDEO SURVEILLANCE SYSTEM

NESPAK

		RECOMMENDED	VER./CKD.	APPROVED
DESN.	NESPAK			
DWN.	MUBASHAR AHMAD			
FILE				
CKD.				
SUBM.				

DATE	DRAWING NO.	REV.
SEP. 2020	39/6/166/TD/1S003	0

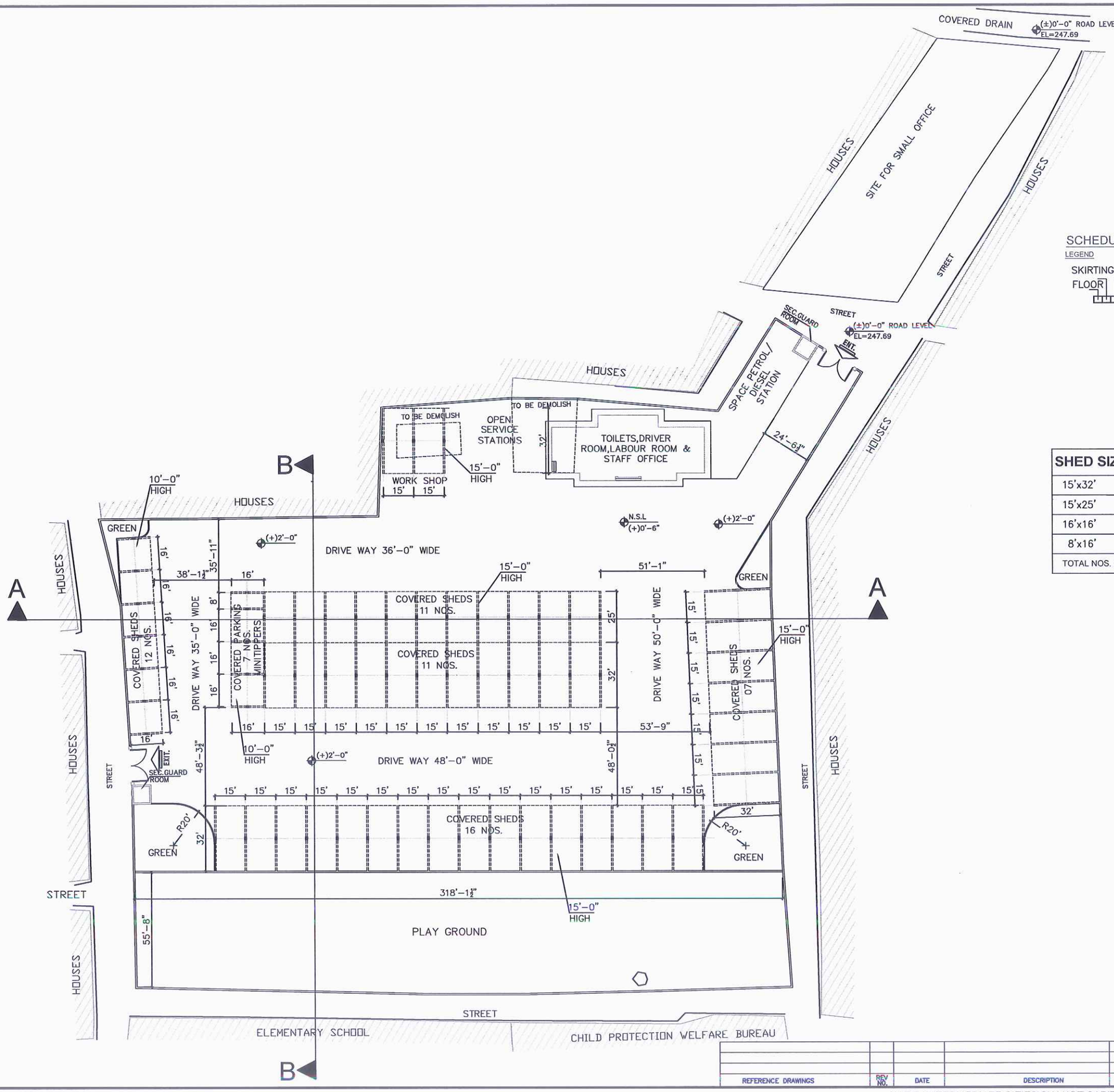

SCHEDULE OF FINISHES

LEGEND

SKIRTING WALL

FLOOR | CEILING

SHED SIZE	NO.OF SHEDS	NO.OF VEHICLES
15'x32'	34 NOS.	34 NOS.
15'x25'	11 NOS.	11 NOS.
16'x16'	09 NOS.	18 NOS.
8'x16'	01 NOS.	01 NOS.
TOTAL NOS. OF VEHICLES = 64 NOS.		

NOTE:

1- ROAD LEVEL IS ASSUMED AS (±)0'-0" REFERENCE TO EL = 247.69 GIVEN ON SURVEY PLAN.

2- TOTAL SITE AREA=12.76 KANAL

N
W E
S

PROGRAM MANAGEMENT UNIT, PUNJAB INTERMEDIATE CITIES IMPROVEMENT INVESTMENT PROGRAM (PICIIP), LOCAL GOVERNMENT AND COMMUNITY DEVELOPMENT (LG & CD) DEPARTMENT, PUNJAB)

CONSULTING SERVICES FOR ENGINEERING, PROCUREMENT AND CONSTRUCTION MANAGEMENT (EPCM) CONSULTANT.

PARKING SHEDS & ALLIED STRUCTURES
CAPITAL ROAD, JUMMAH COUNCIL, MUBARAK ROAD, SIALKOT
PLAN OF TYPICAL X-SECTION

NESPAK -

DESN. NESPAK	RECOMMENDED	VER./CKD.	APPROVED	
DWN. ASHFAQ NAZ				
FILE	DATE	DRAWING NO.	REV.	
CKD.	AUGUST, 2020	3976/102/PC-1/XS05	00	
SUBM.				

REFERENCE DRAWINGS	REV NO.	DATE	DESCRIPTION	BY	CKD.	APPR.

NAZ D:\INTERMEDIATE CITIES\SIALKOT\CAPITAL MUBARAK ROAD SIALKOT\X-SECTION\XS-001 COPY.dwg 29/01/2021

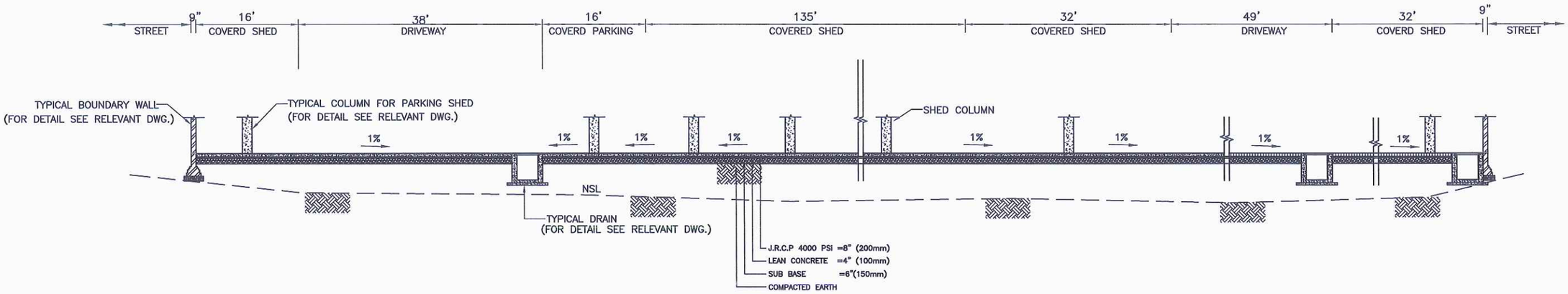

SECTION A–A

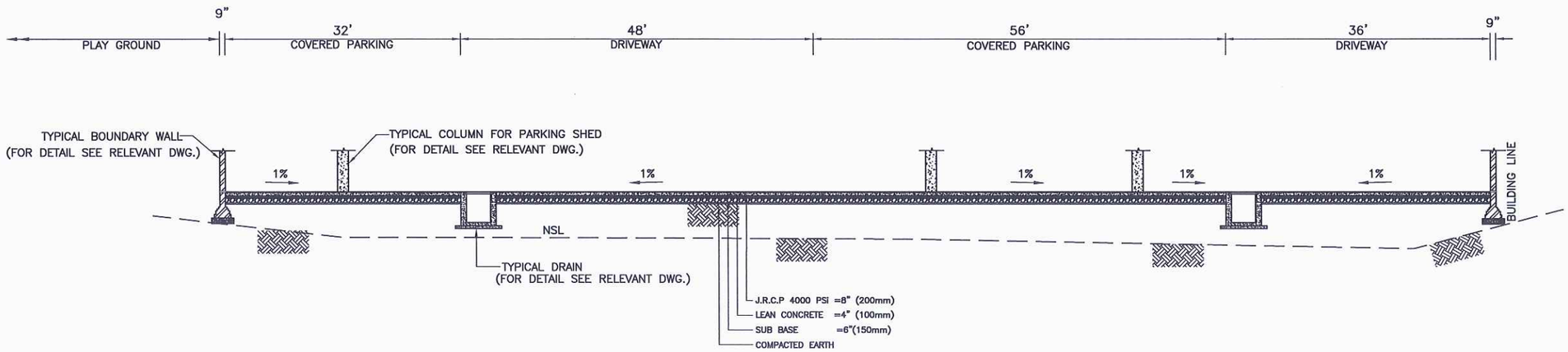

SECTION B–B

NOTES:–

1. ALL DIMENSIONS ARE IN FEET AND INCHES UNLESS OTHER WISE NOTED.
2. SUBGRADE/EMBANKMENT SHALL CONSIST OF SUITABLE MATERIAL HAVING MINIMUM SOAKED CBR OF 7% AT 95% MDD.

REFERENCE DRAWINGS	REV NO.	DATE	DESCRIPTION	BY	CKD.	APPR.

PROGRAM MANAGEMENT UNIT, PUNJAB INTERMEDIATE CITIES IMPROVEMENT INVESTMENT PROGRAM (PICIIP), LOCAL GOVERNMENT AND COMMUNITY DEVELOPMENT (LG & CD) DEPARTMENT, PUNJAB

CONSULTING SERVICES FOR ENGINEERING, PROCUREMENT AND CONSTRUCTION MANAGEMENT (EPCM) CONSULTANT.

PARKING SHEDS & ALLIED STRUCTURES
CAPITAL ROAD, JUMMAH COUNCIL, MUBARAK ROAD, SIALKOT
TYPICAL CROSS SECTIONS

NESPAK

DESN. NESPAK	RECOMMENDED	VER./CKD.	APPROVED
DWN. ASHFAQ NAZ			
FILE			
CKD.			
SUBM.	DATE AUGUST 2020	DRAWING NO. 3976/102/PC–1/XS06	REV. 00

NAZ D:\INTERMEDIATE CITIES\SIALKOT\CAPITAL MUBARAK ROAD SIALKOT\X-SECTION\XS-06 PC-1.dwg,1/7/2021

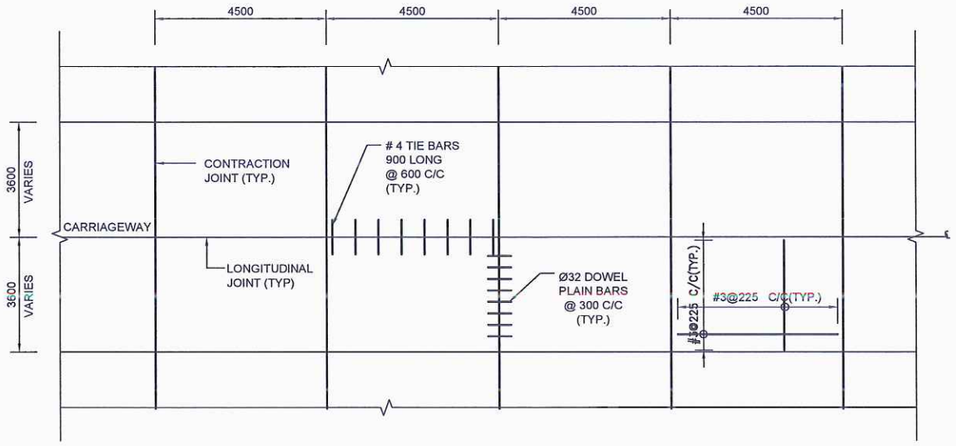

PLAN

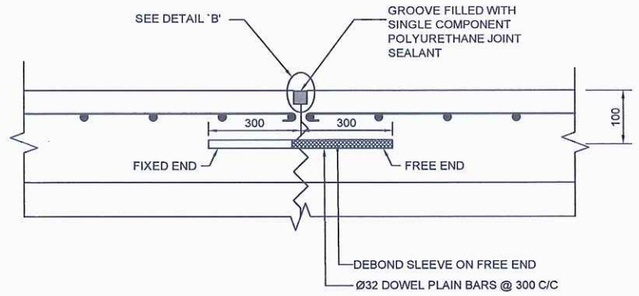

TYPICAL CONTRACTION JOINT

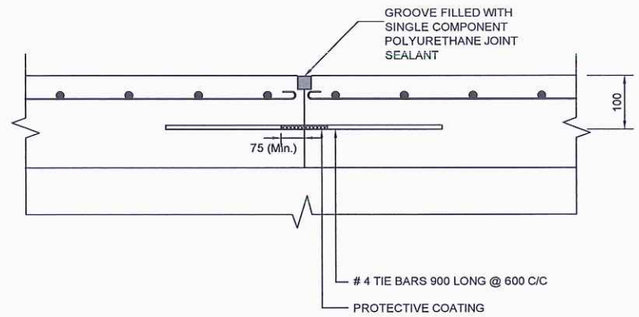

TYPICAL LONGITUDINAL JOINT

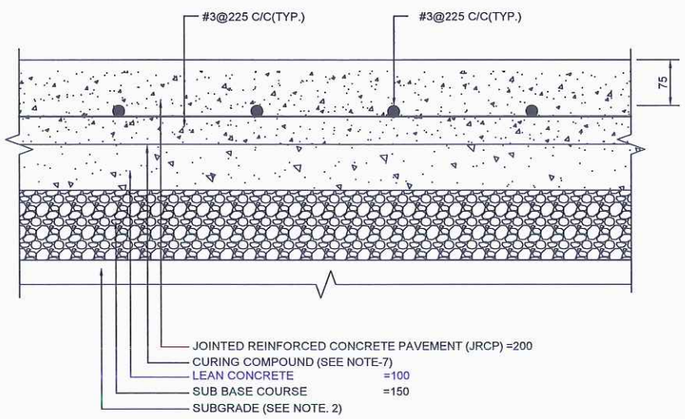

DETAIL `A'

NOTE:

1. ALL DIMENSIONS ARE IN MILLIMETERS UNLESS SPECIFIED OTHERWISE.
2. SUBGRADE SHALL HAVE A MINIMUM SOAKED CBR OF 7% AT 95% MDD.
3. RIGID PAVEMENT SHALL BE PAVED WITH CONCRETE PAVER UNLESS APPROVED OTHERWISE BY THE ENGINEER.
4. REINFORCEMENT STEEL SHALL BE GRADE 60.
5. CONCRETE COMPRESSIVE STRENGTH (CYLINDER) SHALL BE 4000 psi.
6. CURING COMPOUND SHALL CONSIST OF TWO COATS OF WHITE-PIGMENTED WAX-BASED COMPOUND (ASTMC309).
7. THE REINFORCED MESH SHALL BE KEPT IN PLACE TO CONTROL SURFACE CRACKING.THE MESH SHALL NOT BE SUNK IN CONCRETE.
8. FOR DETAILS REFER RELEVANT DRAWINGS.

REFERENCE DRAWINGS	REV NO.	DATE	DESCRIPTION	BY	CKD.	APPR.

PROGRAM MANAGEMENT UNIT, PUNJAB INTERMEDIATE CITIES IMPROVEMENT INVESTMENT PROGRAM (PICIIP), LOCAL GOVERNMENT AND COMMUNITY DEVELOPMENT (LG & CD) DEPARTMENT, PUNJAB)

CONSULTING SERVICES FOR ENGINEERING, PROCUREMENT AND CONSTRUCTION MANAGEMENT (EPCM) CONSULTANT.

CAPITAL ROAD, JUMMAH COUNCIL, MUBARAK ROAD, SIALKOT TYPICAL JOINTED REINFORCED CONCRETE PAVEMENT DETAIL

NESPAK

DESN. NESPAK	RECOMMENDED	VER./CKD.	APPROVED
DWN. ASHFAQ NAZ			
FILE			
CKD.			
SUBM.			

DATE	DRAWING NO.	REV.
AUGUST, 2020	3976/102/PC-1/XS06A	00

NAZ D:\INTERMEDIATE CITIES\SIALKOT\CAPITAL MUBARAK ROAD SIALKOT\X-SECTION\Rigid Pavement-3.dwg 29/01/2021

WATER SUPPLY

LEGEND:

WATER SUPPLY PIPE	
COLD WATER PIPE (C.W)	
HOT WATER PIPE (H.W)	
INSTA GEYSER	I.G
L.L.D.P.E WATER TANK (LINEAR LOW DENSITY POLYETHYLENE)	

NOTES:

1. ALL PIPE DIAMETERS ARE IN MILLIMETERS UNLESS OTHERWISE INDICATED.
2. THIS DRAWING IS TO BE READ IN CONJUNCTION WITH ALL OTHER RELEVANT DRAWINGS.
3. ALL COLD AND HOT WATER PIPES SHALL BE OF PPR (POLY PROPYLENE RANDOM) CLASS PN-20 DN 8077-8078 UNLESS OTHERWISE INDICATED.
4. ALL WATER SUPPLY FITTINGS SUCH AS BENDS, TEES, SOCKETS, SHALL BE OF PPR PN 25, DN 16962 UNLESS OTHERWISE MENTIONED.
5. STOP COCK / GATE VALVE SHALL BE INSTALLED AT ALL PIPES ENTERING THE WALL OR AS DIRECTED BY SITE ENGINEER.
6. CONNECTION TO EACH FIXTURE UNIT SHALL BE OF 25Ø.
7. ALL PIPES HAVE BEEN INDICATED BY OUTER DIAMETERS.
8. ALL WATER SUPPLY PIPES ARE BURRIED PIPES.
9. ALL POLYETHYLENE PIPES SHALL BE OF CLASS (PN- 10,PE-100)

OUTER DIA (mm)	INNER DIA (INCHES)
25	3/4"
32	1"
40	1¼"
50	1½"
63	2"
75	2½"
90	3"
110	4"

9. FOR PPR PIPES, EQUIVALENT INSIDE DIAMETERS IN INCHES SHALL BE AS UNDER

OUTER DIA (mm)	INNER DIA (INCHES)
25 mm	1/2"
32 mm	3/4"
40 mm	1"
50 mm	1¼"
63 mm	1½"
75 mm	2"
90 mm	2½"

SEWERAGE

LEGEND:

WASTE PIPE	
SOIL PIPE	
SEWER PIPE	
GULLY TRAP (1'x1')	GT
MANHOLE (2'-6"x2'x6")	MH
FLOOR TRAP	
VENT PIPE	

NOTES:

1. ALL PIPE DIAMETERS ARE IN INCHES UNLESS OTHERWISE INDICATED.
2. THIS DRAWING IS TO BE READ IN CONJUNCTION WITH ALL OTHER RELEVANT DRAWINGS.
3. MINIMUM SLOPE FOR SEWER LINE
   3"Ø = 0.014
   4"Ø = 0.010
   6"Ø = 0.007
   8"Ø = 0.005
   10"Ø = 0.004
   12"Ø = 0.0031
4. 0.2% SLOPE WILL BE PROVIDED FOR ROOF DRAINAGE.
5. ALL SOIL, WASTE, VENT AND RAINWATER PIPES ARE uPVC ISO 3633 & EN 1329.
6. ALL SEWAGE PIPING FROM MANHOLES AND GULLY TRAPS ONWARD SHALL BE OF uPVC OF CLASS SN-8 (EN-1401)
7. THE CONTRACTOR SHALL CONFIRM THE INVERT LEVEL OF SEWER PIPE FROM THE SEPTIC TANK UP TO EXTERNAL MANHOLE OF THE EXISTING SEWERAGE SYSTEM BEFORE CONNECTING THE SEWER IN THE MANHOLE.

REFERENCE DRAWINGS	REV.NO.	DATE	DESCRIPTION	BY	CKD	APPR

PROGRAM MANAGEMENT UNIT, PUNJAB INTERMEDIATE CITIES IMPROVEMENT INVESTMENT PROGRAM (PICIIP), LOCAL GOVERNMENT AND COMMUNITY DEVELOPMENT (LG & CD) DEPARTMENT, PUNJAB

CONSULTING SERVICES FOR ENGINEERING, PROCUREMENT AND CONSTRUCTION MANAGEMENT (EPCM) CONSULTANT.

PARKING SHEDS MUBARAKPURA, CAPITAL ROAD, SIALKOT OFFICE BUILDING

LEGEND AND NOTES

NESPAK

DESN. NESPAK	RECOMMENDED	VER./CKD.	APPROVED
DWN. MUHAMMAD SALEEM			
FILE			
CKD.			
SUBM.			

DATE	DRAWING NO.	REV.
AUG, 2020	3976/11/TD/4J00	0

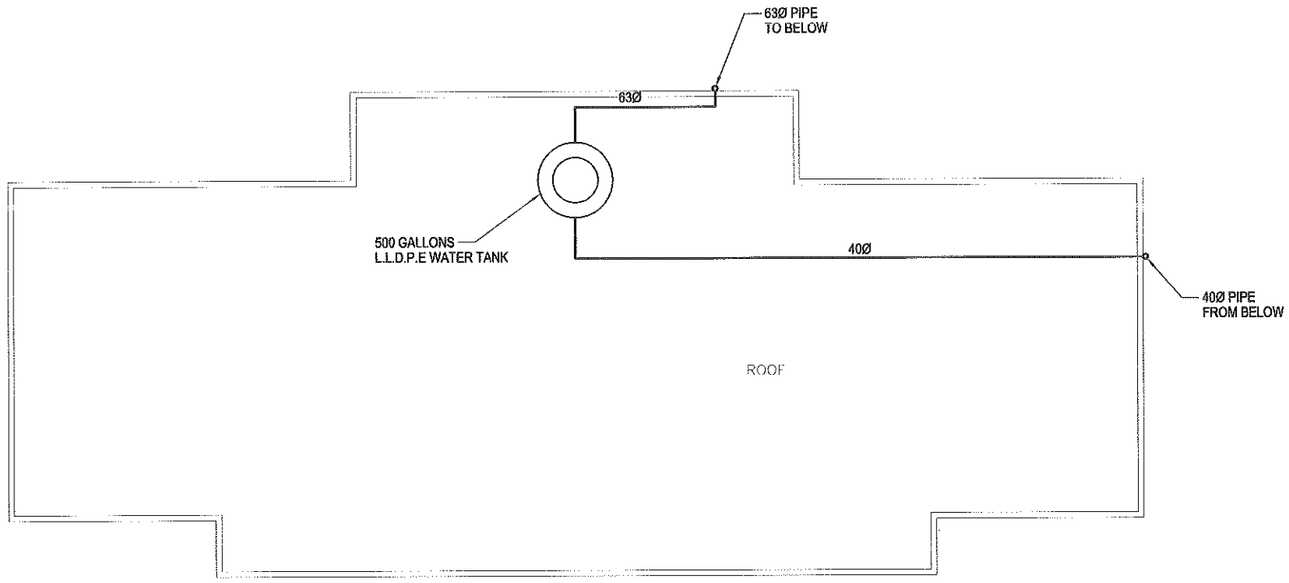

ROOF PLAN

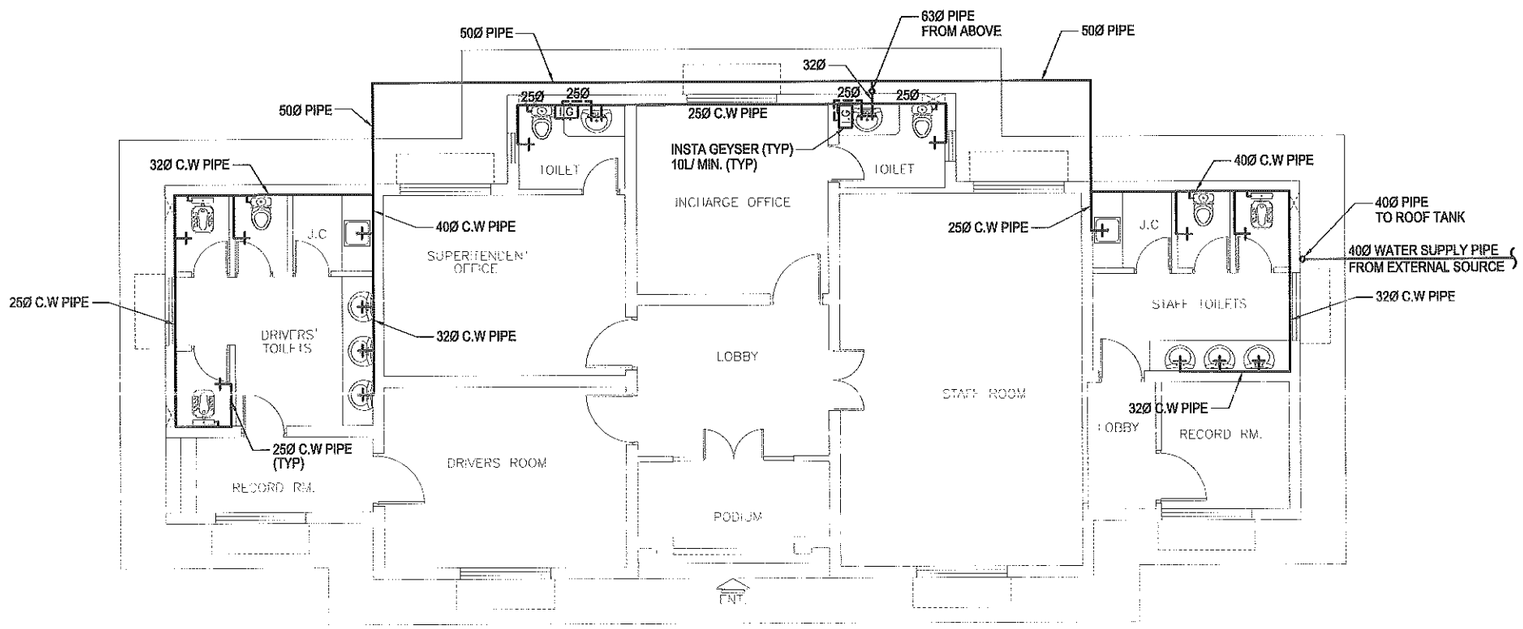

GROUND FLOOR PLAN

NOTE:

FOR LEGEND AND NOTES REFER DRAWING NO. 3976/11/C/4J00

SCALE 1"=10'

PROGRAM MANAGEMENT UNIT, PUNJAB INTERMEDIATE CITIES IMPROVEMENT INVESTMENT PROGRAM (PICIIP), LOCAL GOVERNMENT AND COMMUNITY DEVELOPMENT (LG & CD) DEPARTMENT, PUNJAB)

CONSULTING SERVICES FOR ENGINEERING, PROCUREMENT AND CONSTRUCTION MANAGEMENT (EPCM) CONSULTANT.

PARKING SHEDS MUBARAKPURA, CAPITAL ROAD, SIALKOT
OFFICE BUILDING
WATER SUPPLY SYSTEM

NESPAK

DESN. NESPAK	RECOMMENDED	VER./CKD.	APPROVED
DWN. MUHAMMAD SALEEM			
FILE	DATE	DRAWING NO.	REV.
CKD.	AUG, 2020	3976/11/TD/4J01	0
SUBM.			

REFERENCE DRAWINGS	REV.NO.	DATE	DESCRIPTION	BY	CKD	APPR

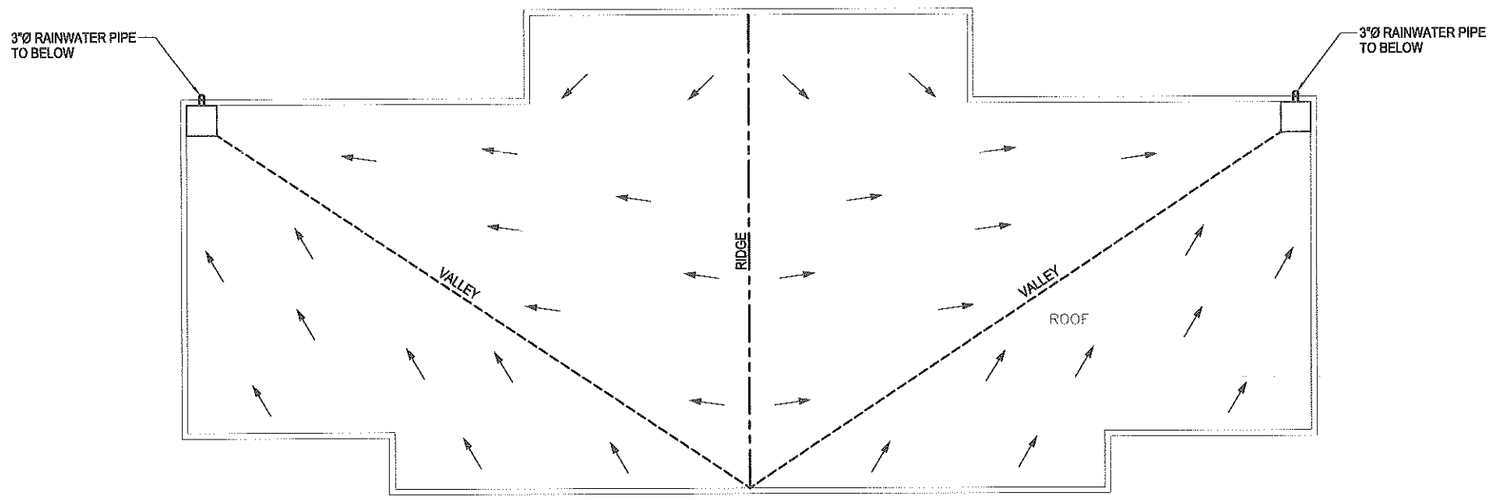

ROOF PLAN

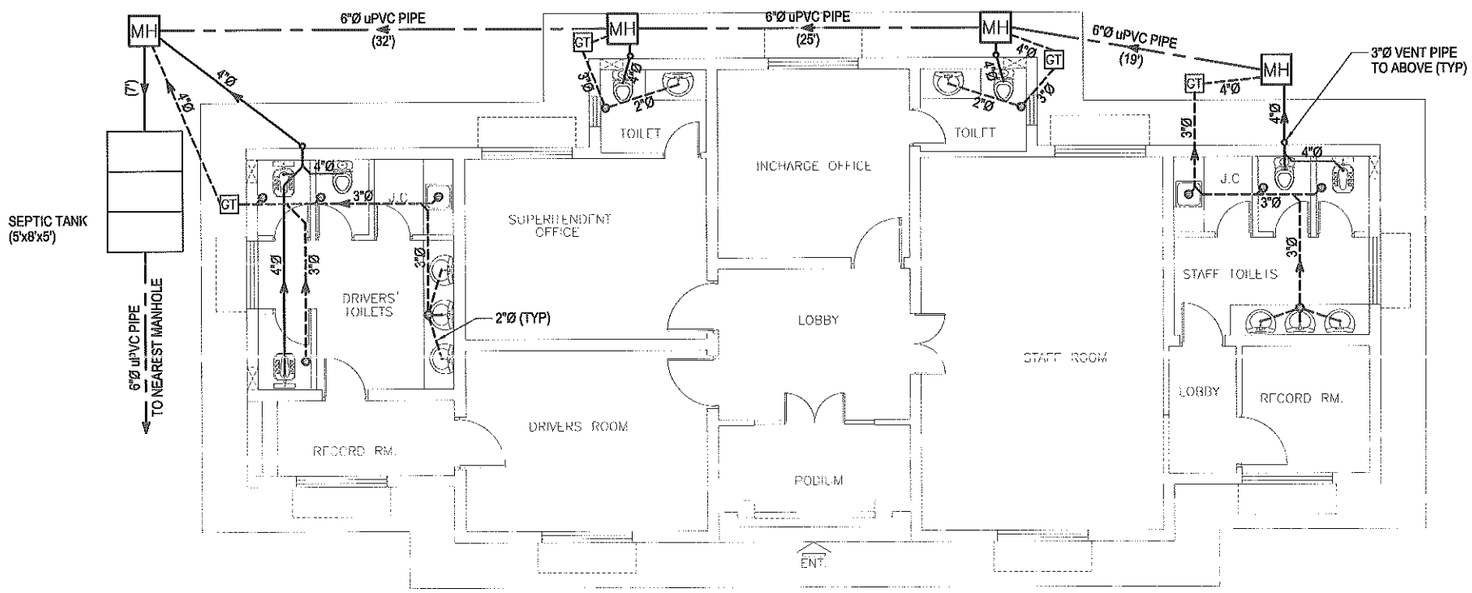

GROUND FLOOR PLAN

NOTE:

FOR LEGEND AND NOTES REFER DRAWING NO. 3976/11/C/4J00

SCALE 1"=10'

PROGRAM MANAGEMENT UNIT, PUNJAB INTERMEDIATE CITIES IMPROVEMENT INVESTMENT PROGRAM (PICIIP), LOCAL GOVERNMENT AND COMMUNITY DEVELOPMENT (LG & CD) DEPARTMENT, PUNJAB)

CONSULTING SERVICES FOR ENGINEERING, PROCUREMENT AND CONSTRUCTION MANAGEMENT (EPCM) CONSULTANT.

PARKING SHEDS MUBARAKPURA, CAPITAL ROAD, SIALKOT OFFICE BUILDING

WATER SUPPLY SYSTEM

NESPAK

DESN. NESPAK	RECOMMENDED	VER./CKD.	APPROVED		
DWN. MUHAMMAD SALEEM					
FILE	DATE	DRAWING NO.		REV.	
CKD.					
SUBM.	AUG, 2020	3976/11/TD/4J02		0	

REFERENCE DRAWINGS	REV.NO.	DATE	DESCRIPTION	BY	CKD	APPR

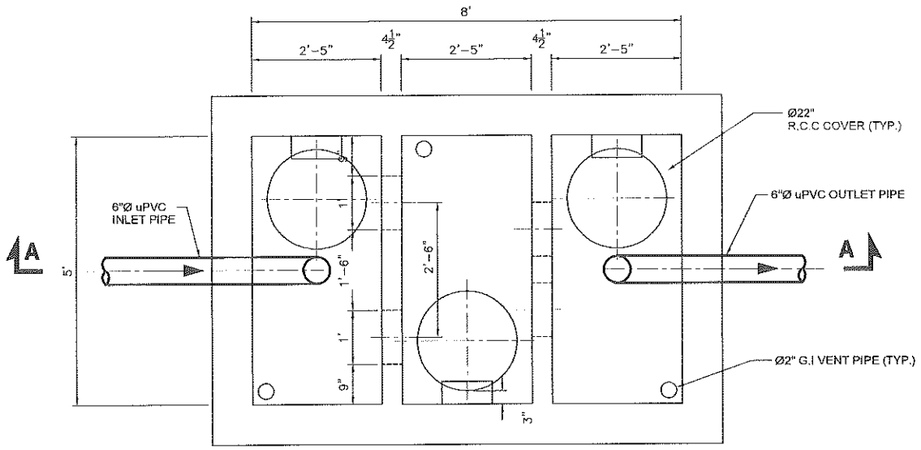

PLAN

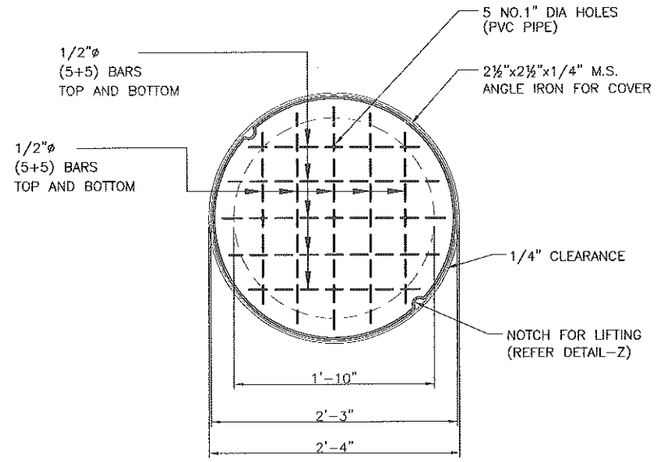

PLAN OF MANHOLE COVER
560mm (22") DIA
DETAIL-W

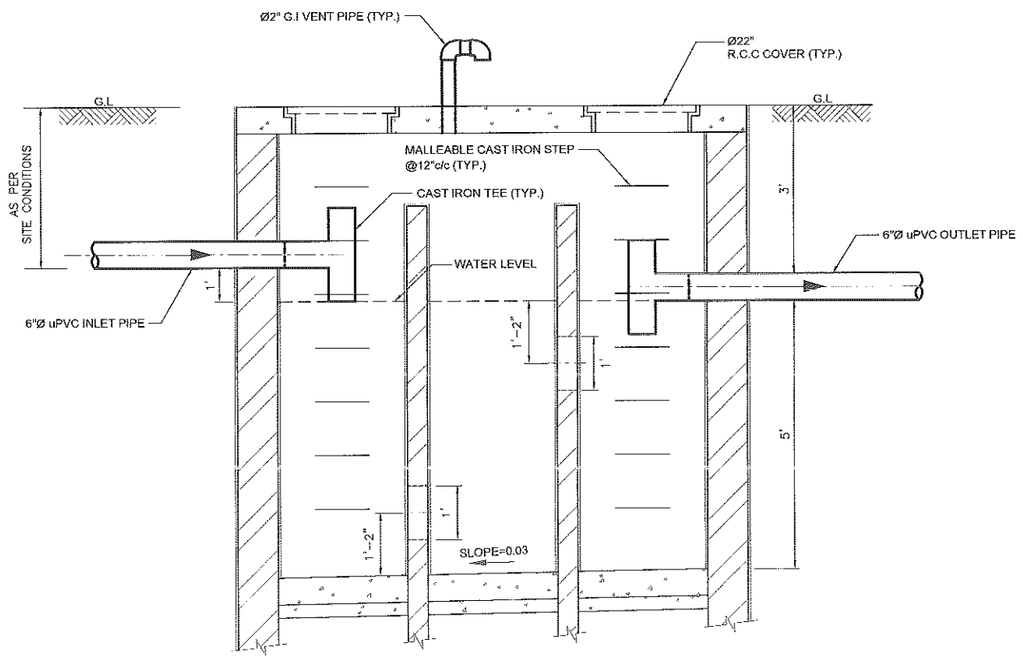

SECTION A-A

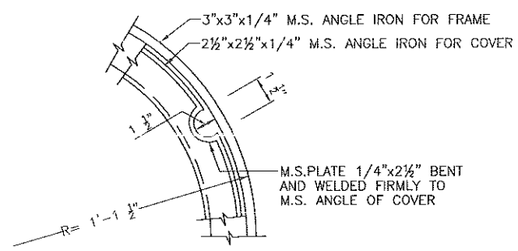

DETAIL-Z

NOTES

1- ALL DIMENSIONS ARE IN FEET/INCHES UNLESS OTHERWISE STATED.

2- THIS DRAWING IS TO BE READ IN CONJUNCTION WITH ALL OTHER RELEVANT DRAWINGS.

3- FOR STRUCTURAL DESIGN/STRUCTURE MATERIAL OF SEPTIC TANK REFER STRUCTURAL DRAWINGS.

REFERENCE DRAWINGS	REV.NO.	DATE	DESCRIPTION	BY	CKD	APPR

PROGRAM MANAGEMENT UNIT, PUNJAB INTERMEDIATE CITIES IMPROVEMENT INVESTMENT PROGRAM (PICIIP), LOCAL GOVERNMENT AND COMMUNITY DEVELOPMENT (LG & CD) DEPARTMENT, PUNJAB)

CONSULTING SERVICES FOR ENGINEERING, PROCUREMENT AND CONSTRUCTION MANAGEMENT (EPCM) CONSULTANT.

PARKING SHEDS MUBARAKPURA, CAPITAL ROAD, SIALKOT
OFFICE BUILDING
SEPTIC TANK

NESPAK

DESN. NESPAK	RECOMMENDED	MGR/CKD.	APPROVED
DWN. MUHAMMAD SALEEM			
FILE	DATE	DRAWING NO.	REV.
CKD.	AUG, 2020	3976/11/TD/4.J03	0
SUBM.			

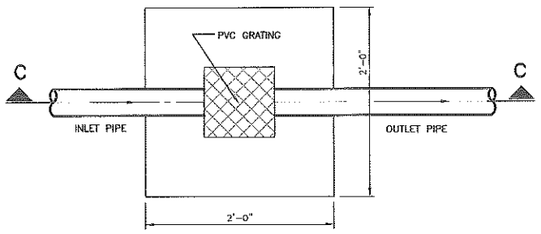

PLAN
GULLY TRAP

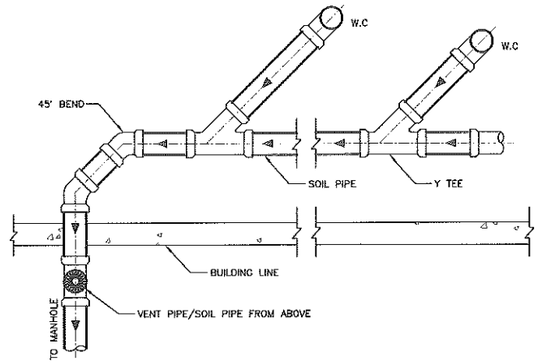

PLAN
DETAIL OF W.C IN SERIES

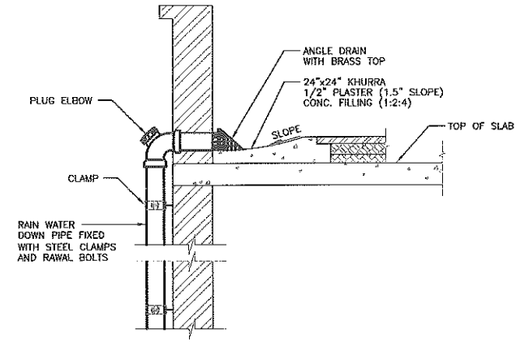

KHURRA DETAIL
WITH RAIN WATER PIPE IN DUCT

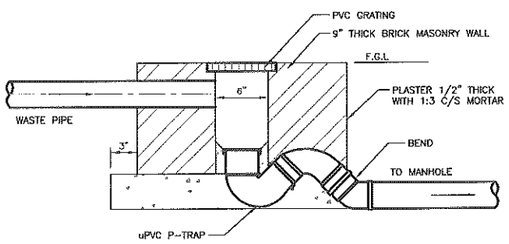

SECTION C-C
GULLY TRAP

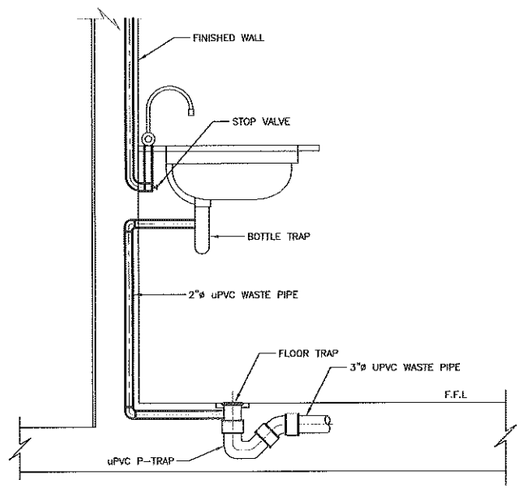

DETAIL OF BASIN CONNECTION
WITH FLOOR TRAP

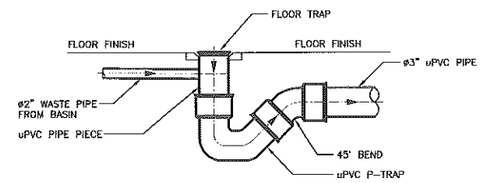

FLOOR DRAIN WITH P-TRAP

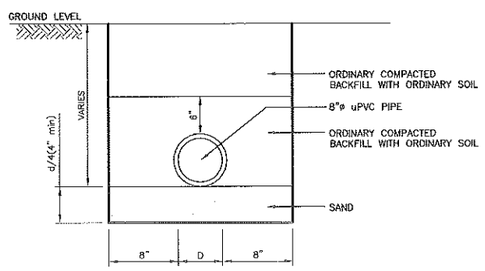

BEDDING FOR LAYING
UPVC PIPE

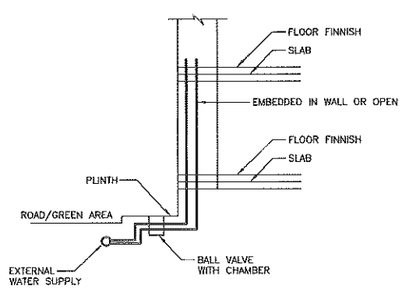

TYPICAL SECTION
WATER PIPES FOR BUILDING

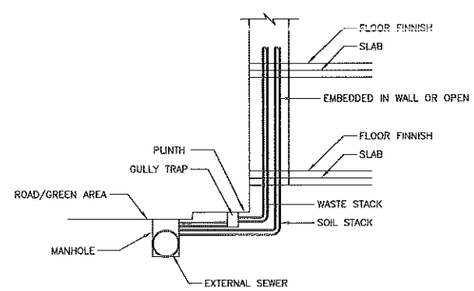

TYPICAL SECTION
DRAINAGE PIPES FROM BUILDING TO SEWER

REFERENCE DRAWINGS	REV.NO.	DATE	DESCRIPTION	BY	CKD	APPR

PROGRAM MANAGEMENT UNIT, PUNJAB INTERMEDIATE CITIES IMPROVEMENT INVESTMENT PROGRAM (PICIIP), LOCAL GOVERNMENT AND COMMUNITY DEVELOPMENT (LG & CD) DEPARTMENT, PUNJAB)

CONSULTING SERVICES FOR ENGINEERING, PROCUREMENT AND CONSTRUCTION MANAGEMENT (EPCM) CONSULTANT.

PARKING SHEDS MUBARAKPURA, CAPITAL ROAD, SIALKOT
OFFICE BUILDING

MISCELLANEOUS PLUMBING DETAILS

NESPAK

DESN. NESPAK	RECOMMENDED	VER./CKD.	APPROVED
DWN. MUHAMMAD SALEEM			
FILE	DATE	DRAWING NO.	REV.
CKD.	AUG, 2020	3976/11/TD/4J04	0
SUBM.			

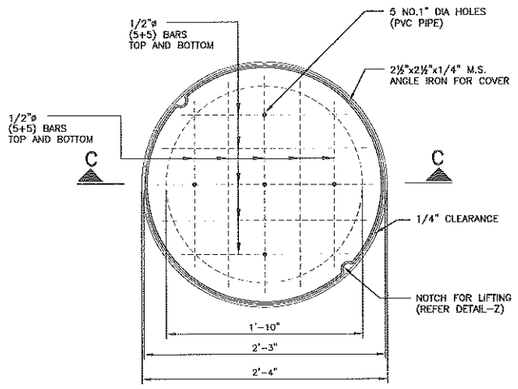

PLAN OF MANHOLE COVER
560mm (22") DIA
DETAIL-W

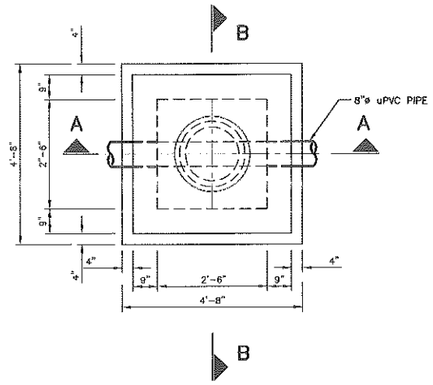

PLAN
MANHOLE

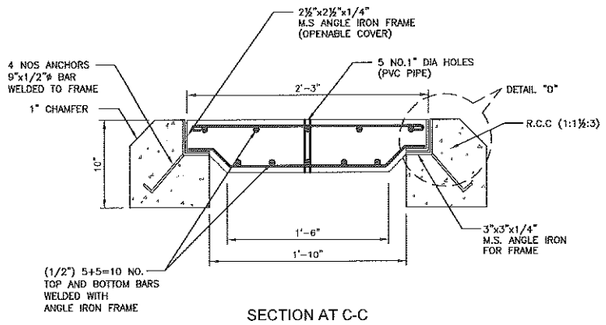

SECTION AT C-C

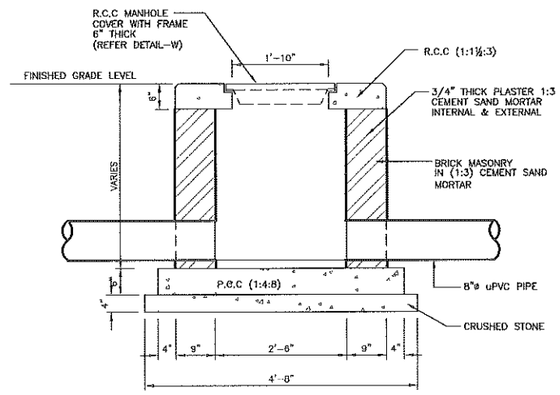

SECTION A-A
MANHOLE

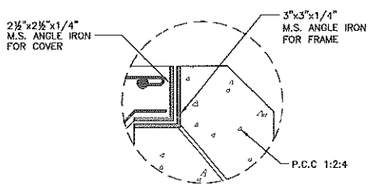

DETAIL "D"

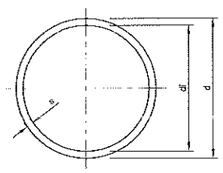

DIMENSIONAL DETAIL
OF PPR PIPE

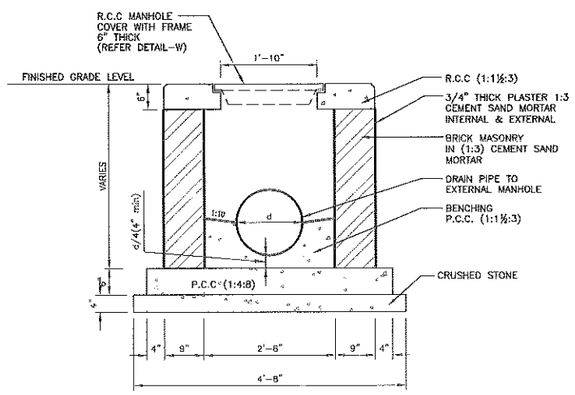

SECTION B-B
MANHOLE

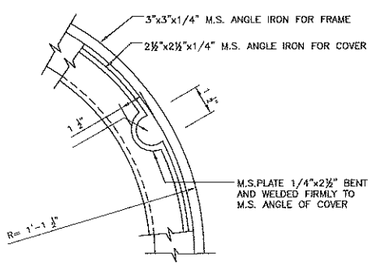

DETAIL-Z

CLAMP SPACES PN20

DIAMETER	CLAMP SPACING DISTANCES ACCORDING TO TEMPERATURE, CM					
mm	20°C	30°C	40°C	50°C	60°C	80°C
25	100	100	100	95	90	85
32	120	115	115	110	100	90
40	130	130	125	120	115	100
50	150	150	140	130	125	110
63	170	160	155	150	145	125
75	185	180	175	160	155	140

TABLE 1	FUSION DATA FOR PPR		
OUTER DIAMETER	AVERAGE HEATING TIME *	AVERAGE WORKING TIME (MAX.)	AVERAGE COOLING TIME (MIN.)
mm	sec	sec	sec
25	7	4	2
32	8	6	4
40	12	6	4
50	18	6	4
63	24	8	6
75	30	8	6
90	40	8	6
110	50	10	8

NOTE:

* AVERAGE HEATING TIME REFERS TO THE START TIME WHEN THE PIPE AND FITTING ARE INSERTED UP TO THE MARKED WELDING DEPTH IN THE WELDING MACHINE.

OUTER DIAMETER	WALL THICKNESS	INTERNAL DIAMETER	INTERNAL DIAMETER
d	S	di	di
mm	mm	mm	inches
25	4.2	16.6	1/2"
32	5.4	21.2	3/4"
40	6.7	26.6	1"
50	8.4	33.2	1¼"
63	10.5	42.0	1½"
75	12.5	50.0	2"
90	15.0	60.0	2½"
110	18.4	73.2	3"

CONCRETE EQUIVALENT STRENGTH CYLINDER	
(1:1½:3)	3000psi
(1:2:4)	2500psi
(1:4:8)	2000psi

NOTE:

ALL DIMENSIONS ARE IN INCHES/FEETS UNLESS OTHERWISE STATED.

REFERENCE DRAWINGS	REV.NO.	DATE	DESCRIPTION	BY	CKD	APPR

PROGRAM MANAGEMENT UNIT, PUNJAB INTERMEDIATE CITIES IMPROVEMENT INVESTMENT PROGRAM (PICIIP), LOCAL GOVERNMENT AND COMMUNITY DEVELOPMENT (LG & CD) DEPARTMENT, PUNJAB)

CONSULTING SERVICES FOR ENGINEERING, PROCUREMENT AND CONSTRUCTION MANAGEMENT (EPCM) CONSULTANT.

PARKING SHEDS MUBARAKPURA, CAPITAL ROAD, SIALKOT
OFFICE BUILDING
MISCELLANEOUS PLUMBING DETAILS

NESPAK

DESN. NESPAK	RECOMMENDED	VER./CKD.	APPROVED
DWN. MUHAMMAD SALEEM			
FILE	DATE AUG, 2020	DRAWING NO. 3976/11/TD/4J05	REV. 0
CKD.			
SUBM.			

LEGEND

STORM WATER DRAIN — D-1

STORM WATER FLOW DIRECTION

ABBREVIATIONS

G.L	GROUND LEVEL
B.L	BED LEVEL

NOTES

1. ALL DRAIN SIZES ARE IN FEET UNLESS OTHERWISE SPECIFIED.
2. M.S (HEAVY DUTY) REMOVABLE GRATING SHALL BE PROVIDED.
3. THE CONTRACTOR SHALL VERIFY THE INVERT LEVELS OF ALL THE STORM WATER DRAINS AS PER SITE CONDITION BEFORE CONSTRUCTION.
4. FOR STRUCTURAL DETAILS REFER TO STRUCTURAL DRAWINGS.
5. READ THIS DRAWING IN CONJUNCTION WITH ALL OTHER RELEVANT DRAWINGS.

REFERENCE DRAWINGS	REV NO.	DATE	DESCRIPTION	BY	CKD.	APPR.

PROGRAM MANAGEMENT UNIT, PUNJAB INTERMEDIATE CITIES IMPROVEMENT INVESTMENT PROGRAM (PICIIP), LOCAL GOVERNMENT AND COMMUNITY DEVELOPMENT (LG & CD) DEPARTMENT, PUNJAB)

CONSULTING SERVICES FOR ENGINEERING, PROCUREMENT AND CONSTRUCTION MANAGEMENT (EPCM) CONSULTANT.

COVERED PARKING SHEDS

STORM WATER DRAINAGE SYSTEM LEGEND & NOTES

NESPAK -

DESN. NESPAK	RECOMMENDED	VERIFIED	APPROVED
DWN. Yasir Vaqar			
FILE	DATE AUGUST 2020	DRAWING NO. 3976/11/TD/3J00	REV. 0
CKD.			
SUBM.			

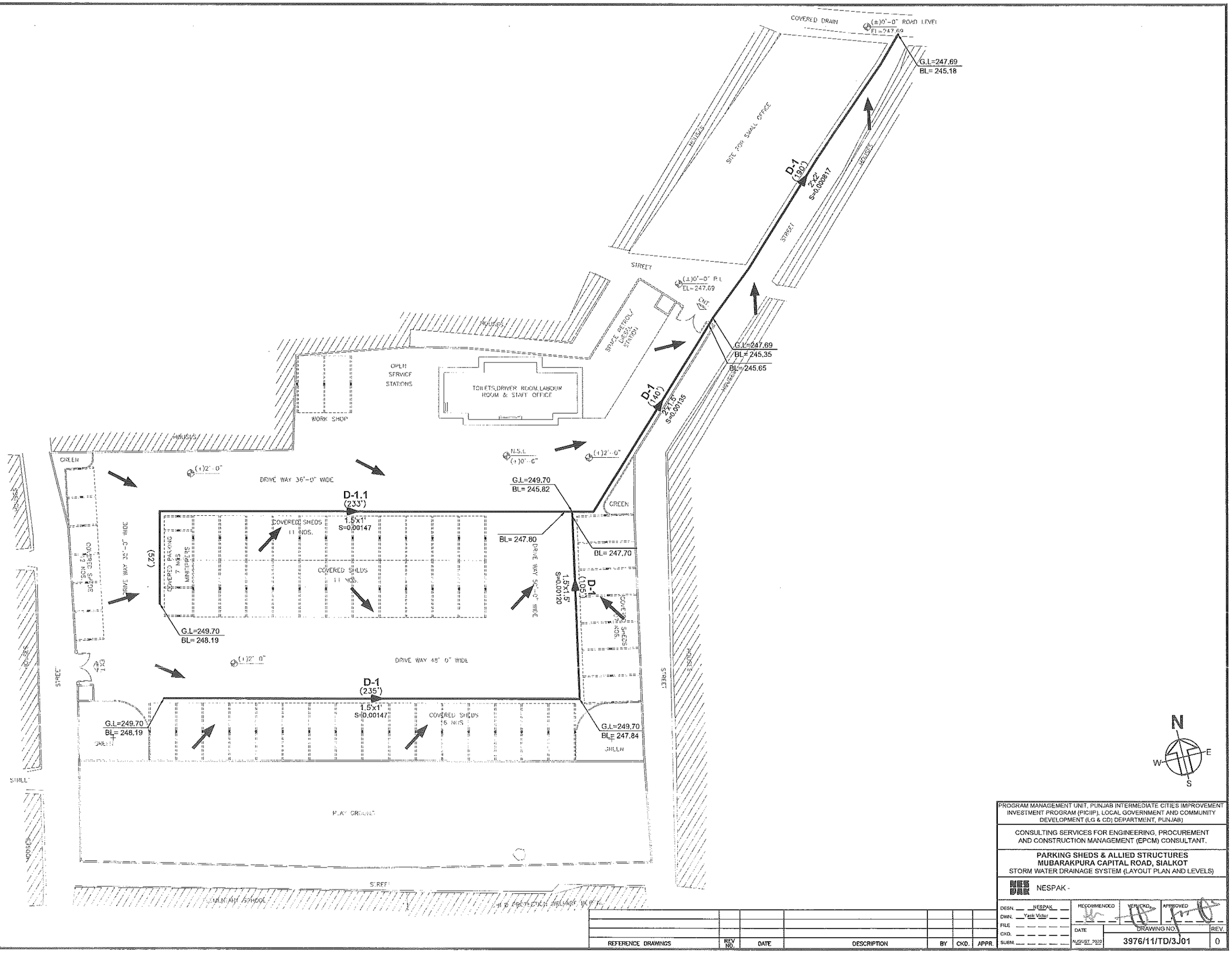

REFERENCE DRAWINGS	REV NO.	DATE	DESCRIPTION	BY	CKD.	APPR.

PROGRAM MANAGEMENT UNIT, PUNJAB INTERMEDIATE CITIES IMPROVEMENT INVESTMENT PROGRAM (PICIIP), LOCAL GOVERNMENT AND COMMUNITY DEVELOPMENT (LG & CD) DEPARTMENT, PUNJAB)

CONSULTING SERVICES FOR ENGINEERING, PROCUREMENT AND CONSTRUCTION MANAGEMENT (EPCM) CONSULTANT.

PARKING SHEDS & ALLIED STRUCTURES
MUBARAKPURA CAPITAL ROAD, SIALKOT
STORM WATER DRAINAGE SYSTEM (LAYOUT PLAN AND LEVELS)

NESPAK -

DESN. NESPAK	RECOMMENDED	VERIFIED	APPROVED
DWN. Yasir Victor			
FILE			
CKD.			
SUBM.	DATE AUGUST, 2020	DRAWING NO. 3976/11/TD/3J01	REV. 0

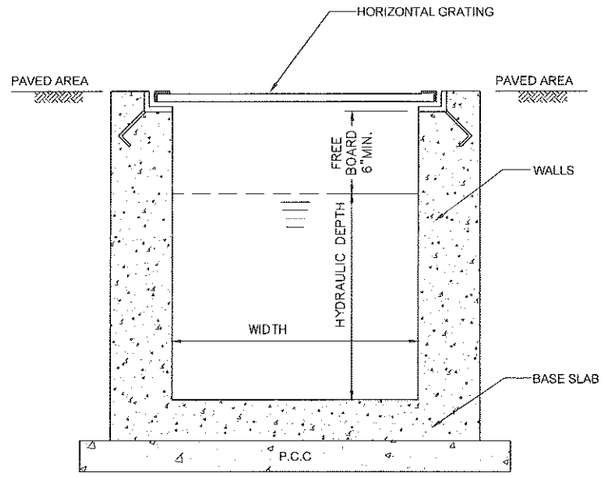

TYPICAL X-SECTION OF DRAIN
FOR HORIZONTAL GRATING

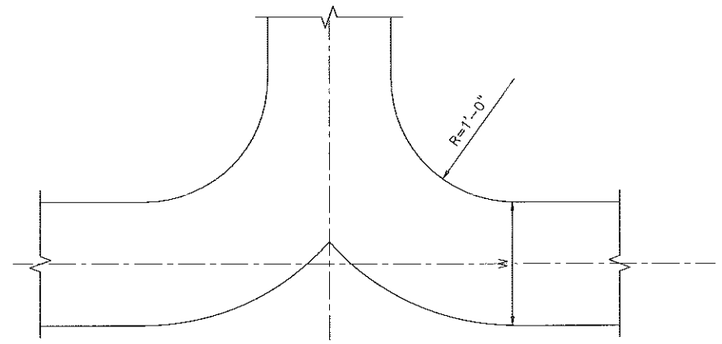

DRAIN JUNCTION DETAIL

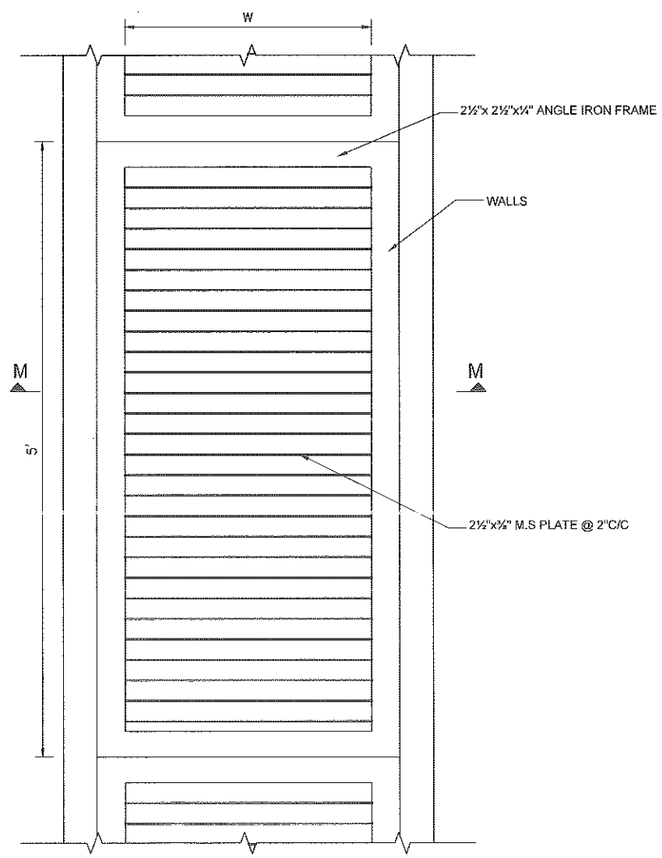

HORIZONTAL GRATING PLAN

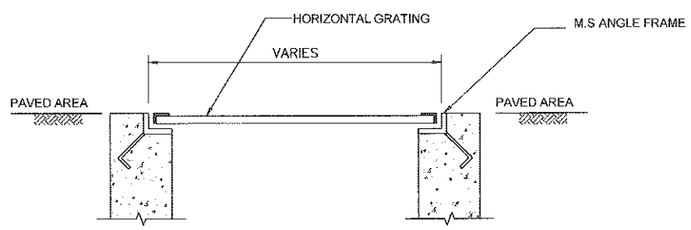

SECTION M-M

DRAIN SIZE	
WIDTH(ft)	DEPTH (ft)
1'-0"	1'-0"
1'-6"	1'-0"
1'-6"	1'-6"
2'-0"	1'-6"
2'-0"	2'-0"

REFERENCE DRAWINGS	REV NO.	DATE	DESCRIPTION	BY	CKD.	APPR.

PROGRAM MANAGEMENT UNIT, PUNJAB INTERMEDIATE CITIES IMPROVEMENT INVESTMENT PROGRAM (PICIIP), LOCAL GOVERNMENT AND COMMUNITY DEVELOPMENT (LG & CD) DEPARTMENT, PUNJAB)

CONSULTING SERVICES FOR ENGINEERING, PROCUREMENT AND CONSTRUCTION MANAGEMENT (EPCM) CONSULTANT.

COVERED PARKING SHEDS

MISCELLANEOUS DETAILS

NESPAK

DESN. NESPAK
DWN. Yasir Victor
FILE
CKD.
SUBM.

RECOMMENDED | VERIFIED | APPROVED

DATE: AUGUST 2022

DRAWING NO. 3976/11/TD/3303

REV. 0

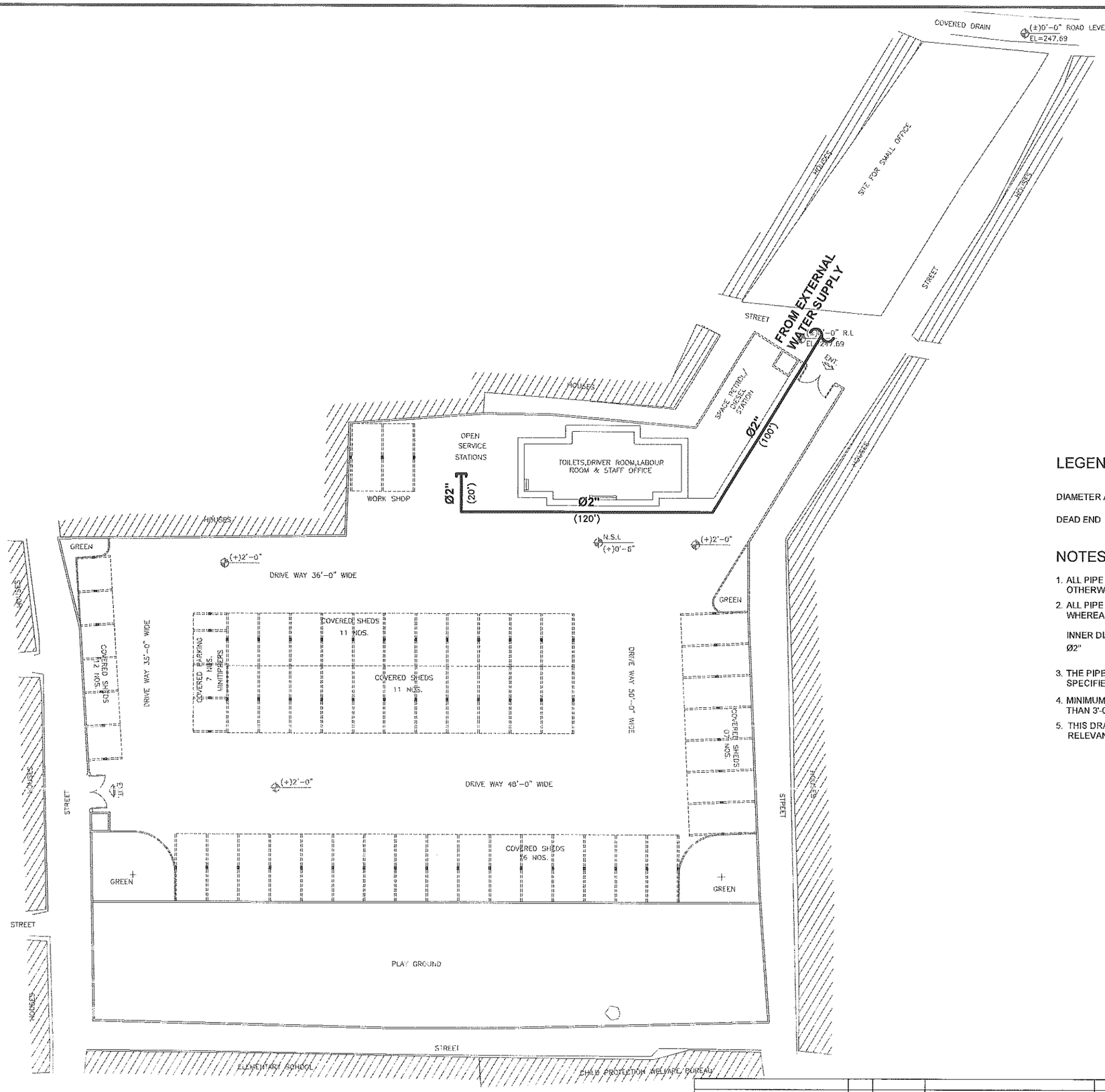

LEGEND

DIAMETER AND LENGTH OF PIPE	Ø2" / (120')
DEAD END	

NOTES

1. ALL PIPE DIAMETERS ARE IN INCHES AND LENGTHS ARE IN FEET UNLESS OTHERWISE SPECIFIED.
2. ALL PIPE DIAMETERS SHOWN ON DRAWINGS ARE INTERNAL DIAMETERS WHEREAS THE OUTER DIAMETERS ARE AS FOLLOWS:

INNER DIA (INCHES)	OUTER DIA (mm)
Ø2"	63

3. THE PIPE MATERIAL SHALL BE HDPE (PN-10, PE-100) UNLESS OTHERWISE SPECIFIED.
4. MINIMUM EARTH COVER OVER CROWN OF PIPE SHALL NOT BE LESS THAN 3'-0".
5. THIS DRAWING IS TO BE READ IN CONJUNCTION WITH ALL OTHER RELEVANT DRAWINGS.

N
W E
S

PROGRAM MANAGEMENT UNIT, PUNJAB INTERMEDIATE CITIES IMPROVEMENT INVESTMENT PROGRAM (PICIIP), LOCAL GOVERNMENT AND COMMUNITY DEVELOPMENT (LG & CD) DEPARTMENT, PUNJAB)

CONSULTING SERVICES FOR ENGINEERING, PROCUREMENT AND CONSTRUCTION MANAGEMENT (EPCM) CONSULTANT.

PARKING SHEDS & ALLIED STRUCTURES
CAPITAL ROAD, JUMMAH COUNCIL, MUBARAK ROAD, SIALKOT
WATER SUPPLY SYSTEM

NESPAK

DESN. NESPAK	RECOMMENDED	VERIFIED	APPROVED			
DWN. Yasir Victor						
FILE	DATE	DRAWING NO.	REV.			
CKD.	AUGUST, 2020	3976/11/TD/1J01	0			
SUBM.						

REFERENCE DRAWINGS	REV NO.	DATE	DESCRIPTION	BY	CKD.	APPR.

GENERAL NOTES

1. GENERAL

1- ALL LEVELS AND DIMENSIONS ARE IN FEET & INCHES UNLESS OTHERWISE NOTED.
2- ALL STRUCTURAL DRAWINGS SHALL BE READ IN CONJUNCTION WITH ARCHITECTURAL, PLUMBING/SEWERAGE, MECHANICAL, ELECTRICAL AND ANY OTHER RELEVANT DRAWING.
3- NOTES GIVEN ON THIS DRAWING ARE APPLICABLE TO ALL DRAWINGS UNLESS MENTIONED OTHERWISE. NOTES WRITTEN ON A DRAWING, SHALL BE APPLICABLE TO THAT PARTICULAR DRAWING ONLY UNLESS OTHERWISE CROSS-REFERRED.
4- ALL MATERIALS AND WORKMANSHIP SHALL CONFORM TO THE SPECIFICATIONS OF THE CONTRACT DOCUMENTS. IN THE ABSENCE OF ANY SPECIFICATIONS, ALL MATERIALS & WORKMANSHIP SHALL CONFORM TO THE RELEVANT ACI, BRITISH OR PAKISTANI CODES & STANDARDS AND SHALL BE SUBJECTED TO THE APPROVAL OF THE ENGINEER.
5- THE CONTRACTOR SHALL BE RESPONSIBLE FOR THE SAFETY OF THE STRUCTURES DURING CONSTRUCTION. HE SHALL ALSO VERIFY ALL DIMENSIONS AND LEVELS BEFORE EXECUTION OF WORK. ANY DISCREPANCY, ERROR OR OMISSION, IF FOUND, SHALL BE BROUGHT TO THE NOTICE OF THE ENGINEER FOR CORRECTION AND APPROVAL.
6- THE CONTRACTOR SHALL COORDINATE WITH ARCHITECTURAL AND VARIOUS SERVICE DRAWINGS FOR SIZES & LOCATION OF ALL STRUCTURAL MEMBERS, FLOORS, WALLS, OPENINGS, FLOOR FINISHES, PIPES etc.
7- THE CONTRACTOR SHALL BE RESPONSIBLE FOR THE EXECUTION OF DEWATERING SYSTEM WHERE SO REQUIRED DURING CONSTRUCTION.
8- TERMITE CONTROL TREATMENT SHALL BE CARRIED OUT AS PER SPECIFICATIONS.
9- DO NOT SCALE THE DRAWINGS. DIMENSIONS, GIVEN ON THE DRAWINGS, SHALL GOVERN.
10- ALL FABRICATION, PAINTING, ERECTION AND QUALITY CONTROL IS TO BE DONE IN ACCORDANCE WITH THE LATEST APPLICABLE ACI/AISC/BRITISH SPECIFICATIONS.
11- BACK FILLING AROUND FOUNDATIONS & WALLS SHALL BE DONE SIMULTANEOUSLY ON BOTH SIDES TO AVOID ANY LATERAL DISPLACEMENT. BACK FILLING UNDER FLOORS AND AROUND FOUNDATIONS SHALL BE DONE IN LAYERS NOT EXCEEDING 6 in. IN THICKNESS AND COMPACTED UPTO 95% MPD.
12- DEWATERING SHALL BE DONE BY CONTRACTOR IF REQUIRED WITH THE PRIOR APPROVAL OF THE ENGINEER.

2. FOUNDATIONS

1- FOUNDATIONS HAVE BEEN DESIGNED BASED ON NET ALLOWABLE BEARING CAPACITY AS SPECIFIED IN GEO-TECHNICAL INVESTIGATION REPORT.
2- IF SOFT/LOOSE POCKET OF SOIL OR LOOSE FILL MATERIAL IS ENCOUNTERED AT FOUNDATION BASE, IT SHOULD BECOMPLETELY EXCAVATED AND REPLACED WITH SELECT FILL MATERIAL. THE SELECT FILL SHOULD BE A-3 AS PER AASHTO SOIL CLASSIFICATIONS.THE SELECT FILL MATERIAL SHOULD BE REPLACED AND COMPACTED IN LAYERS OF THICKNESS APPROPRIATE TO TYPE AND SIZE OF COMPACTED EQUIPMENT TO AT LEAST 75% AT RELATIVE DENSITY OR 95% MODIFIED PROCTOR DRY DENSITY, AS APPROPRIATE. THE ON SITE SOIL AT FOUNDATION EXCAVATION BASE SHOULD BE PROOF ROLLED PRIOR TO THE PLACEMENT OF SELECT FILL/FOUNDATION.
3- ALL FOUNDATIONS SHALL BE PLACED ON COMPETENT LOAD BEARING STRATA. IF ACCEPTABLE BEARING STRATA IS NOT FOUND AT INDICATED DEPTHS OF FOUNDATION, THE ENGINEER SHALL BE NOTIFIED IN WRITING FOR HIS INSTRUCTIONS. ALL COLUMN FOOTING THAT MAY LIE IN THE FILL AREA SHOULD BE SUPPORTED ON THE NATURAL SOIL UNLESS OTHERWISE SHOWN ON THE DRAWINGS.
4- THE BED OF FOUNDATION SHALL BE THOROUGHLY COMPACTED PRIOR TO LAYING FOUNDATION. ANY LOOSE, WET, SOFT SOIL PATCH SHALL BE REPLACED WITH WELL-COMPACTED SELECTED GRANULAR FILL COMPACTED TO 95% MODIFIED AASHTO DENSITY.
5- THE FOUNDATION BED SOIL SHALL BE PROTECTED FROM INGRESS OF MOISTURE FROM ANY SOURCE BY PROVIDING ADEQUATE SURFACE DRAINAGE SYSTEM AND ENSURING LEAK PROOF JOINTING OF SEWERAGE AND WATER SUPPLY LINES. EXCESSIVE AND UNCONTROLLED WATERING FOR CURING AND COMPACTION OF BACK FILL MATERIAL SHALL BE AVOIDED.
6- ALL FOUNDATIONS SHALL BE PLACED ON COMPETENT LOAD BEARING STRATA. IF ACCEPTABLE BEARING STRATA IS NOT FOUND AT INDICATED DEPTHS OF FOUNDATION, THE ENGINEER SHALL BE NOTIFIED IN WRITING FOR HIS INSTRUCTIONS.
7- THE BED OF FOUNDATION SHALL BE THOROUGHLY COMPACTED PRIOR TO LAYING FOUNDATION. ANY LOOSE, WET, SOFT SOIL PATCH SHALL BE REPLACED WITH WELL-COMPACTED SELECT GRANULAR FILL COMPACTED TO 95% MODIFIED AASHTO DENSITY OR AS RECOMMENDED BY THE GEOTECHNICAL ENGINEER.

3. CONCRETE

3.1 STRENGTH

1- STRUCTURAL DESIGN IS BASED ON THE AMERICAN CONCRETE INSTITUTE CODE OF REINFORCED CONCRETE, ACI 318 AND UNIFORM BUILDING CODE.
2- ALL STRUCTURAL CONCRETE SHALL CONFORM TO AMERICAN CONCRETE INSTITUTE (ACI) REQUIREMENTS.
3- THE MINIMUM COMPRESSIVE CYLINDER STRENGTH AT 28 DAYS FOR VARIOUS STRUCTURES SHALL BE AS GIVEN IN THE FOLLOWING TABLE.

STRUCTURE/STRUCTURAL ELEMENT	CLASS OF CONCRETE	MINIMUM COMPRESSIVE CYLINDER STRENGTH AT 28 DAYS (psi)
BLINDING CONCRETE/PLAIN CONCRETE	C	1500 (1:3:6)
ALL OTHER STRUCTURAL ELEMENTS	B	3000 (1:1.5:3)
WATER RETAINING STRUCTURES	A	4000 (1:1:2)

3.2 MIX DESIGN

THE MIX DESIGN FOR THE SPECIFIED GRADES OF CONCRETE MEETING ALL REQUIREMENTS OF STRENGTH, WORKABILITY AND DURABILITY, SHALL BE CARRIED OUT BY THE CONTRACTOR AND SUBMITTED TO THE ENGINEER FOR HIS APPROVAL. CHEMICAL ADDITIVES SUCH AS RETARDERS/SUPER PLASTICIZERS MAY BE USED SUBJECT TO THE APPROVAL BY THE ENGINEER.

3.3 AGGREGATE SIZE

MAXIMUM AGGREGATE SIZE SHALL BE AS FOLLOWS UNLESS OTHERWISE APPROVED BY THE ENGINEER.

STRUCTURAL ELEMENT	MAX. AGGREGATE SIZE (Inch)
FOUNDATION MATS, RAFTS AND FOOTINGS UP TO 3.0 FT. THICK.	1½"
COLUMNS AND BEAMS	3/4"
WALLS	3/4"
SLABS	3/4"

3.4 CONSTRUCTION JOINTS

1- GENERALLY, THE CONSTRUCTION JOINTS AS INDICATED ON THE DRAWINGS WILL BE FOLLOWED. HOWEVER THE CONTRACTOR MAY USE AN ALTERNATE CONSTRUCTION JOINTS ARRANGEMENT TO SUIT HIS REQUIREMENTS, WITH PRIOR APPROVAL OF THE ENGINEER. FOR THIS PURPOSE, THE CONTRACTOR SHALL SUBMIT HIS PROPOSAL FOR THE APPROVAL OF THE ENGINEER TWO WEEKS IN ADVANCE OF HIS SCHEDULED CONCRETE POURING DATE. ALL CONSTRUCTION JOINTS SHALL BE TREATED AS PER SPECIFICATIONS.
2- CONSTRUCTION JOINTS IN FLOOR SLABS AND BEAMS SHALL BE LOCATED AS SHOWN ON THE DRAWINGS OR AS APPROVED BY THE ENGINEER. HORIZONTAL CONSTRUCTION JOINTS IN RAFTS, SLABS AND BEAMS ARE NOT PERMITTED EXCEPT AS SPECIFICALLY INDICATED ON STRUCTURAL DRAWINGS.
3- SURFACE OF CONCRETE CONSTRUCTION JOINTS SHALL BE ROUGHENED, CLEANED AND LAITANCE REMOVED AS PER SPECIFICATIONS.
4- CONSTRUCTION JOINTS SHALL BE SO MADE AND LOCATED AS NOT TO IMPAIR THE STRENGTH OF THE STRUCTURE. THEY SHALL BE LOCATED AT THE ONE THIRD OF THE SPANS OF SLABS, BEAMS & JOISTS. IN WALLS & COLUMNS SHALL BE AT THE UNDER SIDE OF FLOORS, SLABS OR BEAMS AND AT THE TOP OF FOOTINGS OR FLOOR SLABS.
5- WATERSTOP SHALL BE PROVIDE AT CONSTRUCTION JOINTS WHERE REQUIRED WITH PRIOR APPROVAL OF THE ENGINEER.

3.5 EMBEDDED ITEMS

BEFORE PLACING CONCRETE, IT SHALL BE ENSURED THAT ALL EMBEDDED ITEMS ARE IN POSITION AND SECURELY FASTENED/WELDED IN PLACE ACCORDING TO THE DRAWINGS. EMBEDDED ITEMS SHALL BE FREE OF OIL AND OTHER FOREIGN MATTER SUCH AS LOOSE COATING OF RUST. ALL EMBEDDED ITEMS REQUIRED FOR DOORS AND WINDOWS SHALL BE SUPPLIED AND PLACED IN POSITION BY CIVIL CONTRACTOR. ALL EMBEDDED ITEMS REQUIRED FOR PIPING, ELECTRICAL AND MECHANICAL EQUIPMENTS SHALL BE SUPPLIED BY OTHERS. HOWEVER SUCH ITEMS SHALL BE PLACED AND HELD IN POSITION BY THE CIVIL CONTRACTOR BY HIS OWN SUPPORTING ARRANGEMENT APPROVED BY THE ENGINEER.

3.6 FINISHES

FINISHES OF CONCRETE SURFACES SHALL BE AS PER SPECIFICATIONS.

3.7 CONCRETE POURING

THE CONTRACTOR SHALL SUBMIT CONCRETE POURING SCHEDULE FOR ENGINEER'S APPROVAL. NO CONCRETE SHALL BE PLACED UNTIL WRITTEN PERMISSION IS GIVEN BY THE ENGINEER DURING CONSTRUCTION, STACKING OF CONSTRUCTION MATERIALS, BRICKS etc. SHALL BE AVOIDED ON SLAB PANELS.

4. REINFORCING STEEL

ALL REINFORCING STEEL SHALL BE DEFORMED BARS CONFORMING TO THE LATEST ASTM A615 GRADE 60 HAVING A MINIMUM YIELD STRENGTH OF 60,000 PSI.

4.1 CONCRETE PROTECTION TO REINFORCEMENT

MINIMUM CLEAR CONCRETE COVER TO REINFORCEMENT SHALL BE AS FOLLOWS, UNLESS OTHERWISE SPECIFIED ON THE DRAWINGS.

	STRUCTURAL ELEMENT	COVER (Inch)
1-	FOUNDATION IN CONTACT WITH SOIL & WATER	3"
	FOUNDATIONS NOT IN CONTACT WITH SOIL	2"
2-	WALLS (INCLUDING RETAINING WALLS)	
	FACE EXPOSED TO WEATHER OR EARTH	2"
	FACE NOT EXPOSED TO WEATHER OR EARTH	1½"
	FACE EXPOSED TO WATER	3"
3-	SLABS	3/4"
4-	COLUMNS AND BEAMS	1½"

4.2 DETAILING OF REINFORCEMENT

ADDITIONAL BARS EQUAL TO 1/2 REINFORCING BARS AREA, INTERRUPTED BY OPENING, SHALL BE PROVIDED AT EACH SIDE OF OPENING AND SHALL EXTEND EQUAL TO SPLICE LENGTH (3'-0" MIN.) BEYOND OPENING. MIN. 2-#5 BARS ON EACH SIDE AND FACE SHALL BE USED. FOR OPENINGS LESS THAN 12"X12", OFFSET THE REINFORCEMENT TO CLEAR OPENING AND NO ADDITIONAL REINFORCEMENT SHALL BE PROVIDED.

A. ACCESSORIES

BAR SUPPORTS, SPACERS AND OTHER ACCESSORIES ARE NOT SHOWN ON THE DRAWINGS. THE RECOMMENDATIONS OF ACI-315 OR OTHER SUPPORTING SYSTEM AS APPROVED BY THE ENGINEER MAY BE USED.

B. STANDARD REINFORCEMENT DETAILS

a) MINIMUM BEND DIAMETERS

THE BEND DETAILS SHALL BE AS SHOWN IN THE TABLE AND FIGURES BELOW.

TABLE (1) – MINIMUM DIAMETER OF BEND

BAR SIZE	MINIMUM DIAMETER OF BEND
#3 Through #5	$4D_b$
#6 Through #8	$6D_b$
#9, #10 and #11	$8D_b$

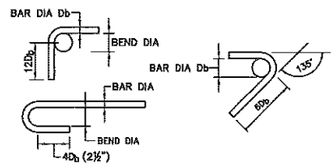

STANDARD HOOKS FOR REINFORCEMENT OTHER THAN STIRRUPS, TIES & HOOPS — STANDARD HOOKS FOR STIRRUPS TIES AND HOOPS

b) DEVELOPMENT LENGTH

UNLESS NOTED OTHERWISE ON THE DRAWINGS, MINIMUM BASIC DEVELOPMENT LENGTH FOR Fy = 60000 PSI (GRADE 60) SHALL BE AS FOLLOWS:

(a) TOP BARS

fc' (psi) \ Bar Size	DEVELOPMENT LENGTH 'Inch' (Fy=60000 psi)								
	#3	#4	#5	#6	#7	#8	#9	#10	#11
3000 (1:1.5:3)	21	30	38	42	63	72	81	90	99
4000 (1:1:2)	18	24	33	36	54	63	69	78	84

(b) BOTTOM BARS

fc' (psi) \ Bar Size	DEVELOPMENT LENGTH 'Inch' (Fy=60000 psi)								
	#3	#4	#5	#6	#7	#8	#9	#10	#11
3000 (1:1.5:3)	18	21	27	33	48	54	63	69	75
4000 (1:1:2)	15	18	24	30	42	48	54	60	66

c) SPLICE/LAP LENGTH

1- WELDED WIRE FABRIC MESH SHALL BE LAPPED OVER ADJACENT SHEET BY 12 INCH.
2- BARS SHALL BE SPLICED ONLY WHERE INDICATED, OR AT LOCATIONS SPECIFICALLY APPROVED BY THE ENGINEER.
3- THE LAPS SHOULD BE STAGGERED.
4- UNLESS OTHERWISE STATED ON THE DRAWINGS THE FOLLOWING LAP LENGTHS SHALL BE PROVIDED.

(a) TOP BARS

fc' (psi) \ Bar Size	SPLICE/LAP LENGTH 'Inch' (Fy=60000 psi)								
	#3	#4	#5	#6	#7	#8	#9	#10	#11
3000 (1:1.5:3)	27	39	48	54	81	93	105	114	129
4000 (1:1:2)	24	33	42	48	72	81	90	102	111

(b) BOTTOM BARS

fc' (psi) \ Bar Size	SPLICE/LAP LENGTH 'Inch' (Fy=60000 psi)								
	#3	#4	#5	#6	#7	#8	#9	#10	#11
3000 (1:1.5:3)	21	27	36	42	63	72	81	90	99
4000 (1:1:2)	18	24	30	36	54	63	72	78	84

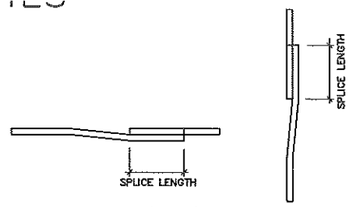

BEAM SPLICE (TYP.) COLUMN SPLICE (TYP.)

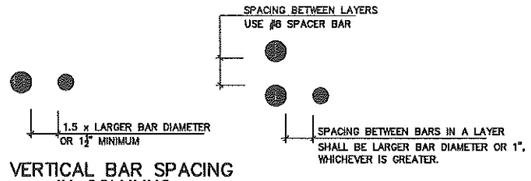

VERTICAL BAR SPACING IN COLUMNS — BAR SPACING IN BEAM

4.3 ALL REINFORCING STEEL SHALL BE ACCURATELY LOCATED IN THE FORMS AND HELD FIRMLY IN PLACE BEFORE & DURING THE PLACEMENT OF CONCRETE, BY MEANS OF WIRE AND SUPPORTS ADEQUATE TO PREVENT DISPLACEMENT DURING THE COURSE OF CONSTRUCTION.
4.4 DISTRIBUTION REINFORCEMENT SHALL BE PROVIDED AS #3@10"c/c UNLESS OTHERWISE SPECIFIED.

5. FORMWORK

1- THE DESIGN AND ENGINEERING OF THE FORMWORK, AS WELL AS ITS CONSTRUCTION IS THE REASONABILITY OF THE CONTRACTOR. THE FORMWORK SHALL BE DESIGNED CONFORMING TO THE REQUIREMENTS OF ACI 301 AND CONTRACT SPECIFICATIONS.
2- THE FORMWORK SHALL HAVE SUFFICIENT STRENGTH TO WITHSTAND THE PRESSURE RESULTING FROM PLACEMENT AND VIBRATION OF CONCRETE AND SHALL HAVE SUFFICIENT RIGIDNESS TO MAINTAIN THE TOLERANCE SPECIFIED IN ACI 301 AND CONTRACT SPECIFICATIONS.

6. SHOP DRAWINGS

1- SHOP DRAWINGS FOR FORMWORK, CONCRETE AND REINFORCEMENT SHOWING ALL FABRICATION DIMENSIONS AND LOCATION SHALL BE PREPARED BY THE CONTRACTOR AND SUBMITTED FOR THE ENGINEER'S APPROVAL.
2- THE CONTRACTOR SHALL ALSO PREPARE BAR BENDING SCHEDULES AND SUBMIT THESE FOR APPROVAL OF THE ENGINEER.
3- IT WILL BE PREFERABLE THAT CUTTING AND BENDING OF REINFORCING STEEL BE CARRIED OUT IN WORKSHOP WITH CUTTING BENDING MACHINE.

7. SHORING AND BRACING

1- SHORE & BRACE ALL PARTS OF THE BUILDING DURING CONSTRUCTION, TO THE EXTENT NECESSARY TO ENSURE COMPLETE SAFETY, STRENGTH & SERVICEABILITY OF ALL STRUCTURAL ELEMENTS UNDER ALL CONDITIONS OF LOADS, WHICH MAY OCCUR DURING CONSTRUCTION. SUCH SHORING & BRACING IS THE CONTRACTOR'S SOLE RESPONSIBILITY AND IS NOT SHOWN ON STRUCTURAL DRAWINGS OR SPECIFIED IN THE PROJECT SPECIFICATIONS.
2- THE CONTRACTOR SHALL BE RESPONSIBLE FOR THE SAFETY AND STABILITY OF THE ADJACENT EXISTING STRUCTURES AND SHALL PROVIDE SHORING AND BRACING DURING EXCAVATION AND CONSTRUCTION, WHEREVER AND WHENEVER REQUIRED TO THE SATISFACTION OF THE ENGINEER.

8. BRICK WORK

1- ALL BRICK WORK SHALL CONFORM TO SPECIFICATIONS GIVEN IN THE CONTRACT DOCUMENT.
2- ALL BRICKS SHALL BE SOUND, HARD, WELL BURNT AND OF UNIFORM SIZE, COLOUR AND TEXTURE. DIMENSIONAL VARIATION IN SIZES SHALL NOT EXCEED 1/8".
3- ALL BRICK WORK SHALL BE ERECTED PLUMB AND TRUE TO LINE AND LEVEL. THE MAXIMUM VARIATION IN ANY STOREY HEIGHT OR ANY LENGTH OF WALL SHALL BE 1/8" IN 10', OR AS SPECIFIED IN THE CONTRACT SPECIFICATIONS.
4- MORTAR USED IN MASONRY CONSTRUCTION SHALL HAVE AN ULTIMATE COMPRESSIVE STRENGTH OF NOT LESS THAN 1800 Psi AND SHALL CONFORM TO ASTM C270, COMPRESSIVE STRENGTH OF MASONRY AT 28 DAYS SHALL NOT BE LESS THAN 1150 Psi.
5- ALL DESIGN, DETAILING, MATERIAL AND WORKMANSHIP SHALL BE IN ACCORDANCE WITH RELEVANT ACI, ASTM, AND UBC CODE AND STANDARDS. TESTING OF COMPRESSIVE STRENGTH OF MASONRY SHALL BE DONE, IF SO DIRECTED
6- BY THE ENGINEER, IN ACCORDANCE WITH ASTM C67 OR PAKISTAN STANDARD-208.
7- THE AVERAGE COMPRESSIVE STRENGTH OF TWELVE HALF BRICKS SHALL BE NOT LESS THAN 2000 psi AND SHALL BE NOT LESS THAN 1800 psi FOR ANY INDIVIDUAL BRICK.
8- BRICK SHALL BE LAID "FROG" UPWARD WITH MORTAR JOINT AND IN ENGLISH AND FLEMISH BOND OR AS DIRECTED BY THE ENGINEER.
9- TESTING OF COMPRESSIVE STRENGTH OF MASONRY SHALL BE DONE, IF SO DIRECTED BY THE ENGINEER, IN ACCORDANCE WITH ASTM C67 OR PAKISTAN STANDARD-208.

9. TOLERANCES AND DIMENSIONS

BEFORE THE FORMWORK IS LAID AT SITE THE CONTRACTOR MUST VERIFY AND CHECK OVERALL DIMENSIONS/ELEVATIONS OF THE STRUCTURE GIVEN IN THE STRUCTURAL DRAWINGS TO SEE IF THE FINISHED DIMENSIONS/ELEVATIONS GIVEN ON THE DRAWINGS TALLY AFTER PROVIDING THE REQUIRED FINISH. THE ENGINEER'S REPRESENTATIVE SHALL VERIFY THE MEASUREMENTS OF STRUCTURAL SIZE AND ELEVATIONS TO BE RECORDED IN THE RELEVANT POUR STEPS. PERMISSION TO PROCEED SHALL NOT BE GRANTED IF DEVIATIONS ARE MORE THAN PERMISSIBLE TOLERANCES, AS STIPULATED IN THE SPECIFICATIONS.

10. LOCAL ADJUSTMENTS

LOCAL ADJUSTMENTS TO ACCOMMODATE FIXTURES/EMBEDMENTS/OPENINGS MAY BE MADE AT SITE, SUBJECT TO THE APPROVAL OF THE ENGINEER, AS LONG AS IT DOES NOT MATERIALLY AFFECT THE DESIGN.

11. STRUCTURAL STEEL

1- ALL STRUCTURAL STEEL SECTIONS SHALL CONFORM TO ASTM A36M OR EQUIVALENT WITH MINIMUM YIELD STRENGTH OF 248 MPa (36,000 psi). ALL ANCHORS, BOLTS, NUTS AND WASHERS SHALL CONFORM TO ASTM A325M. ALL STEEL PLATES, TUBES AND BUILT-UP SECTIONS SHALL CONFORM TO HR 235.
2- ALL WELDS SHALL CONFORM TO THE APPLICABLE PROVISIONS OF A.W.S (AMERICAN WELDING SOCIETY) CODE. ALL WELDING ELECTRODES SHALL CONFORM TO E 70XX.
3- MINIMUM SIZE OF FILLET WELD SHALL BE 7mm EXCEPT OTHERWISE NOTED.
4- ALL STRUCTURAL STEEL SECTIONS SHALL BE GIVEN TWO COATS OF REDOXIDE PAINT. ALL EXPOSED STEEL SURFACES SHALL BE PAINTED WITH APPROVED PAINT AND COLOUR AS DIRECTED BY THE ENGINEER.
5- THE BASE PLATES OF THE COLUMNS SHALL BE LEVELED AND THEN GROUTED WITH APPROVED NON-SHRINK GROUT USING STANDARD APPROVED PROCEDURE.
6- ALL ANCHOR BOLTS SHALL BE HOT DIPPED GALVANIZED.
7- NUTS AND BOLTS FOR CLAMPS SHALL BE SPOT WELDED AFTER TIGHTENING.

TABLE FOR LINTEL REINFORCEMENT

OPENING WIDTH	DEPTH	BOTTOM	TOP	STIRRUPS
3'-0" TO 4'-0"	6"	2#4	2#3	#3@6"
4'-1" TO 6'-0"	9"	3#4	3#3	#3@6"
6'-1" TO 10'-0"	9"	2#6	2#4	#3@6"

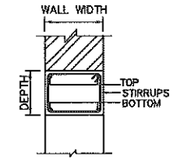

LINTEL SECTION

12- REINFORCEMENT DETAIL AT OPENING IN SLAB/SLEEVES.

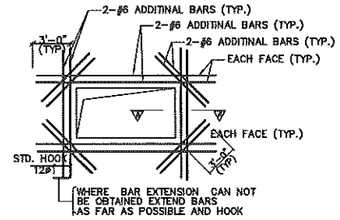

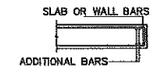

SECTION A-A

NOTES
- FOR OPENING WITH MAXIMUM DIMENSION OVER 5'-0" REFER TO OTHER DETAILS.
- USE THESE DETAILS IF NOT SHOWN IN DESIGN DRAWINGS.

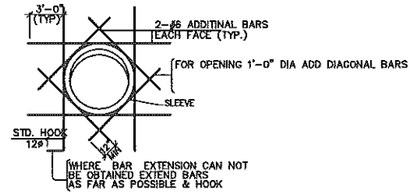

13. SLAB CURTAILMENT PLAN & CORNER REINFORCEMENT END

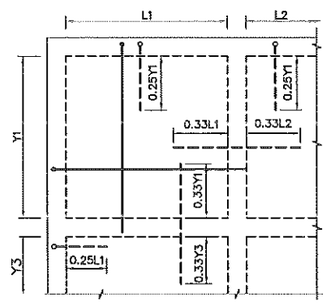

TYPICAL SLAB REINFORCEMENT (CUT OFF POINTS)

NOTE. TOP REINFORCEMENT OF SLAB AT CONTINUOUS EDGE SHALL BE GREATER OF THE ADJACENT SPAN.

TENDER DRAWING

NOT TO BE USED FOR CONSTRUCTION FOR TENDER PURPOSE ONLY

REFERENCE DRAWINGS	REV.NO.	DATE	DESCRIPTION	BY	CKD	APPR

PROGRAM MANAGEMENT UNIT, PUNJAB INTERMEDIATE CITIES IMPROVEMENT INVESTMENT PROGRAM (PICIIP), LOCAL GOVERNMENT AND COMMUNITY DEVELOPMENT (LG & CD) DEPARTMENT, PUNJAB)

CONSULTING SERVICES FOR ENGINEERING, PROCUREMENT AND CONSTRUCTION MANAGEMENT (EPCM) CONSULTANT.

COVERED PARKING SHEDS & ALLIED STRUCTURES
ALLAMA IQBAL TOWN, SIALKOT
GENERAL NOTES

NESPAK

DESN. NESPAK	RECOMMENDED	VER./CKD.	APPROVED
DWN. GHULAM M.			
FILE	DATE AUG. 2020	DRAWING NO. 3976/033/TD/G001	REV. 0
CKD.			
SUBM.			

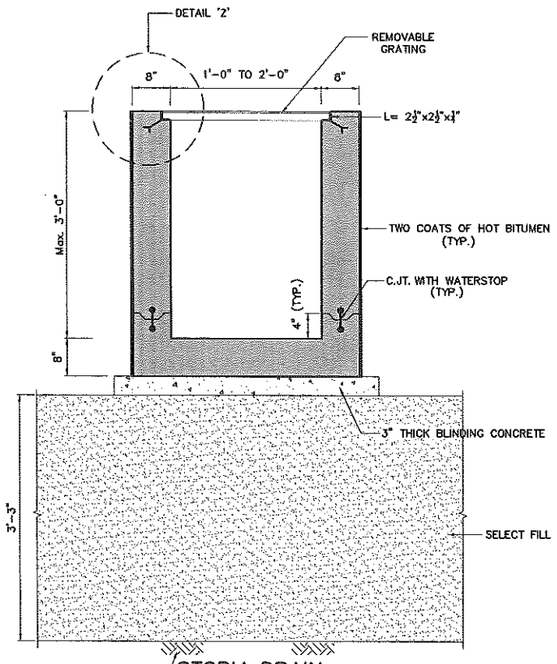

STORM DRAIN
(CONCRETE OUTLINE)
SCALE 1"=1'-0"

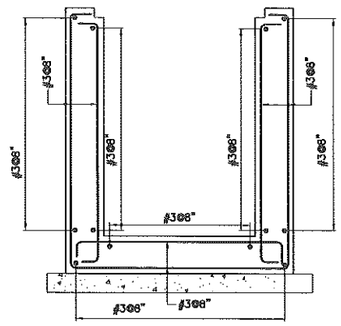

STORM DRAIN
(REINFORCEMENT)
SCALE 1"=1'-0"

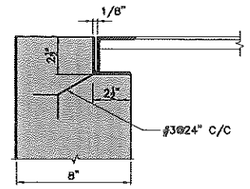

DETAIL 'Z'
SCALE 3"=1'-0"

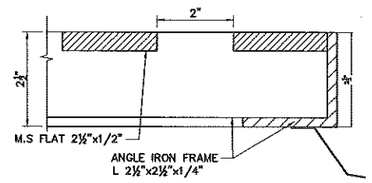

SECTION A–A
SCALE 6"=1'-0"

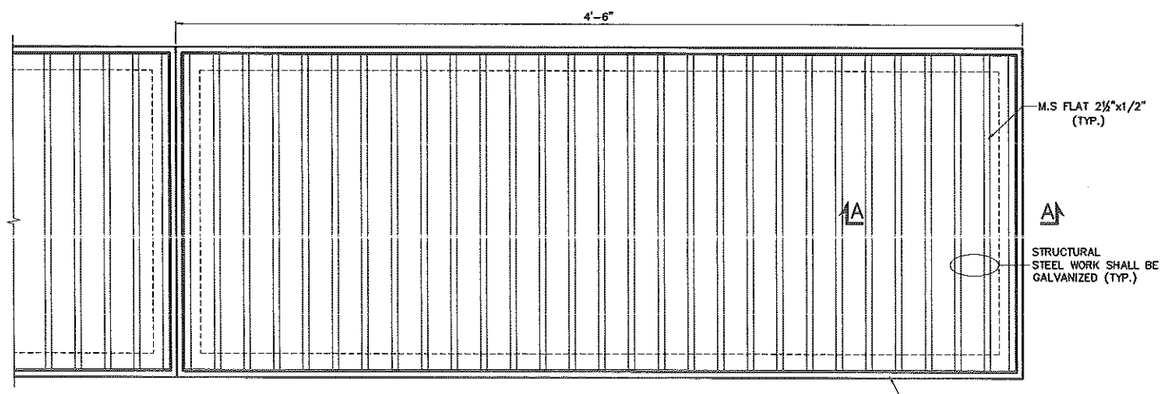

TYPICAL GRATING DETAIL
SCALE 3"=1'-0"

NOTES

1. ALL DIMENSIONS AND ELEVATIONS ARE IN FEET & INCHES.
2. READ THIS DRAWING IN CONJUNCTION WITH ALL OTHER RELEVANT DRAWINGS.
3. REINFORCED CONCRETE SHALL HAVE A MINIMUM COMPRESSIVE CYLINDER STRENGTH OF 3000 Psi AT 28 DAYS UNLESS OTHERWISE NOTED.
4. BLINDING CONCRETE / PCC SHALL HAVE A MINIMUM COMPRESSIVE CYLINDER STRENGTH OF 1500 Psi AT 28 DAYS.
5. ALL REINFORCEMENT SHALL BE DEFORMED BARS CONFORMING TO ASTM A 615 GRADE 60 HAVING A MINIMUM YIELD STRENGTH OF 60,000 Psi.
6. THE FOLLOWING MINIMUM CLEAR CONCRETE COVER TO REINFORCEMENT SHALL BE PROVIDED, UNLESS OTHERWISE SPECIFIED ON THE DRAWING.

STRUCTURAL ELEMENT		COVER (IN)
(i)	BASE SLAB	1"
(ii)	WALL	1"

7. THE ONSITE SOIL AT FOUNDATION EXCAVATION BASE SHOULD BE PROOF ROLLED PRIOR TO THE PLACEMENT OF SELECT FILL / FOUNDATION.
8. OPEN AREAS ADJACENT TO FOUNDATIONS MUST BE PROTECTED AGAINST PENETRATION OF SURFACE WATER, WHICH SHOULD BE DRAINED AWAY FROM THE CONSTRUCTED AREAS.
9. THE CONTRACTOR SHALL PREPARE BAR BENDING SCHEDULES AND SUBMIT THESE FOR APPROVAL OF THE ENGINEER.
10. BACKFILLING AROUND THE FOUNDATIONS SHOULD BE CARRIED OUT SIMULTANEOUSLY ON BOTH SIDES OF THE WALL/FOUNDATIONS.
11. BACKFILLING AROUND FOUNDATIONS SHALL BE WELL COMPACTED (95%MPD) AND SHALL BE DONE IN LAYERS NOT EXCEEDING 8 INCHES IN THICKNESS.
12. ALL STRUCTURAL STEEL SECTIONS SHALL CONFORM TO ASTM A36M OR EQUIVALENT WITH MINIMUM YIELD STRENGTH OF 248 MPa (36,000 psi). ALL ANCHORS, BOLTS, NUTS AND WASHERS SHALL CONFORM TO ASTM A325M. ALL STEEL PLATES, TUBES AND BUILT–UP SECTIONS SHALL CONFORM TO HR 235.
13. ALL WELDS SHALL CONFORM TO THE APPLICABLE PROVISIONS OF A.W.S (AMERICAN WELDING SOCIETY) CODE. ALL WELDING ELECTRODES SHALL CONFORM TO E 70XX.
14. MINIMUM SIZE OF FILLET WELD SHALL BE 6mm EXCEPT OTHERWISE NOTED.

TENDER DRAWING

NOT TO BE USED FOR CONSTRUCTION
FOR TENDER PURPOSE ONLY

INCHES 0 1 2 3 4 FEET
SCALE: 3/8"=1'-0"
UNLESS OTHERWISE NOTED

PROGRAM MANAGEMENT UNIT, PUNJAB INTERMEDIATE CITIES IMPROVEMENT INVESTMENT PROGRAM (PICIIP), LOCAL GOVERNMENT AND COMMUNITY DEVELOPMENT (LG & CD) DEPARTMENT, PUNJAB)

CONSULTING SERVICES FOR ENGINEERING, PROCUREMENT AND CONSTRUCTION MANAGEMENT (EPCM) CONSULTANT.

COVERED PARKING SHEDS AT ALLAMA IQBAL TOWN, SIALKOT (STORM DRAIN)
CONCRETE OUTLINE & REINFORCEMENT

NESPAK

REFERENCE DRAWINGS	REV. NO.	DATE	DESCRIPTION	BY	CKD.	APPR.

DESN. NESPAK	RECOMMENDED	VER./CKD.	APPROVED
DWN. M.ASIM			
CKD.	DATE	DRAWING NO.	REV.
SUBM.	SEP. 2020	3976/033/TD/3G01	0

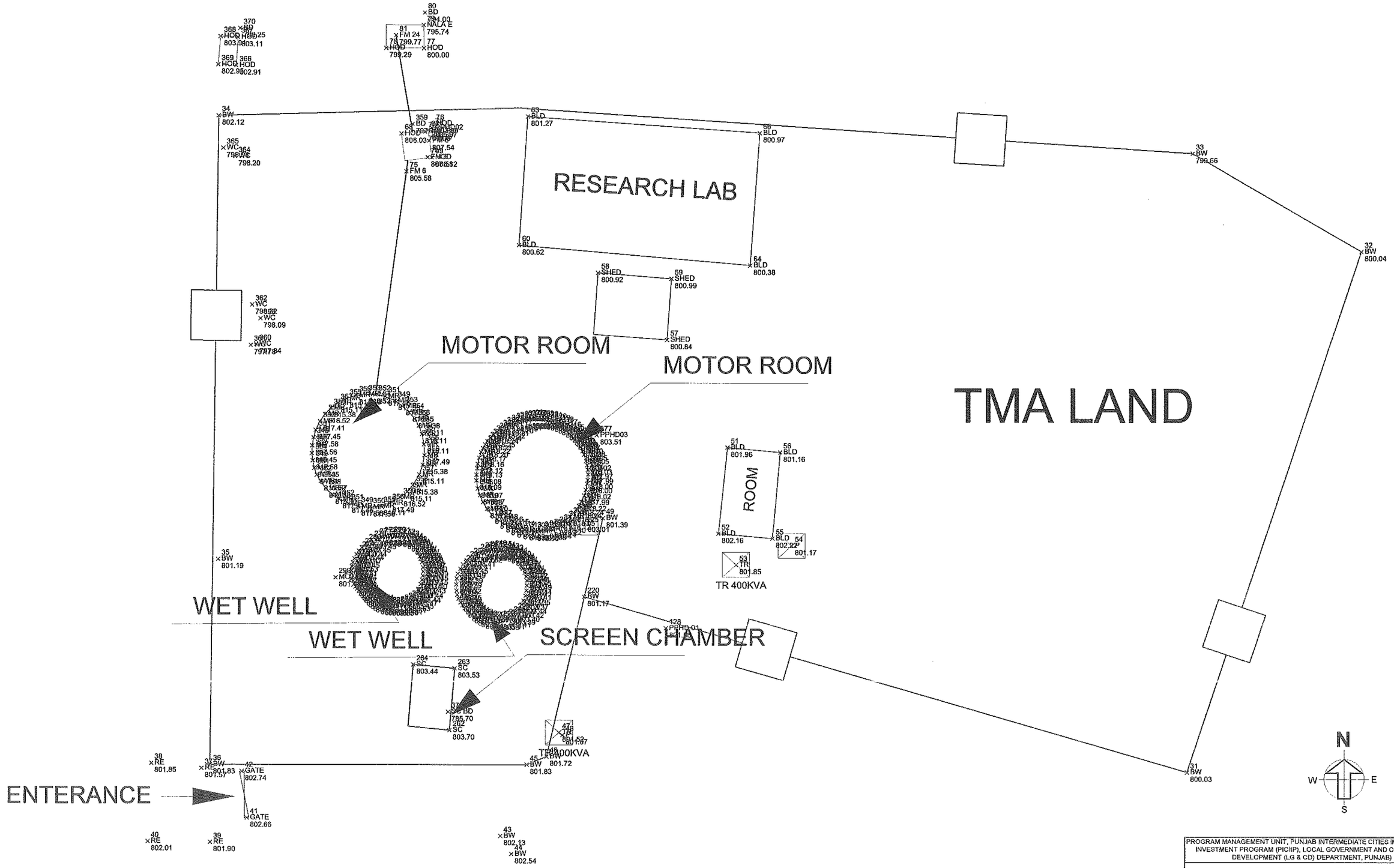

PROGRAM MANAGEMENT UNIT, PUNJAB INTERMEDIATE CITIES IMPROVEMENT INVESTMENT PROGRAM (PICIIP), LOCAL GOVERNMENT AND COMMUNITY DEVELOPMENT (LG & CD) DEPARTMENT, PUNJAB)

CONSULTING SERVICES FOR ENGINEERING, PROCUREMENT AND CONSTRUCTION MANAGEMENT (EPCM) CONSULTANT.

PARKING SHEDS & ALLIED STRUCTURES
ALLAMA IQBAL TOWN, SIALKOT
TOPOGRAPHIC SURVEY PLAN

NESPAK

DESN. NESPAK	RECOMMENDED	VER./CKD.	APPROVED
DWN. dilaher			
FILE			
CKD.	DATE	DRAWING NO.	REV.
SUBM.	JULY. 2020	3976/311/TD/B01a	0

REFERENCE DRAWINGS	REV. NO.	DATE	DESCRIPTION	BY	CK'D.	APPR.

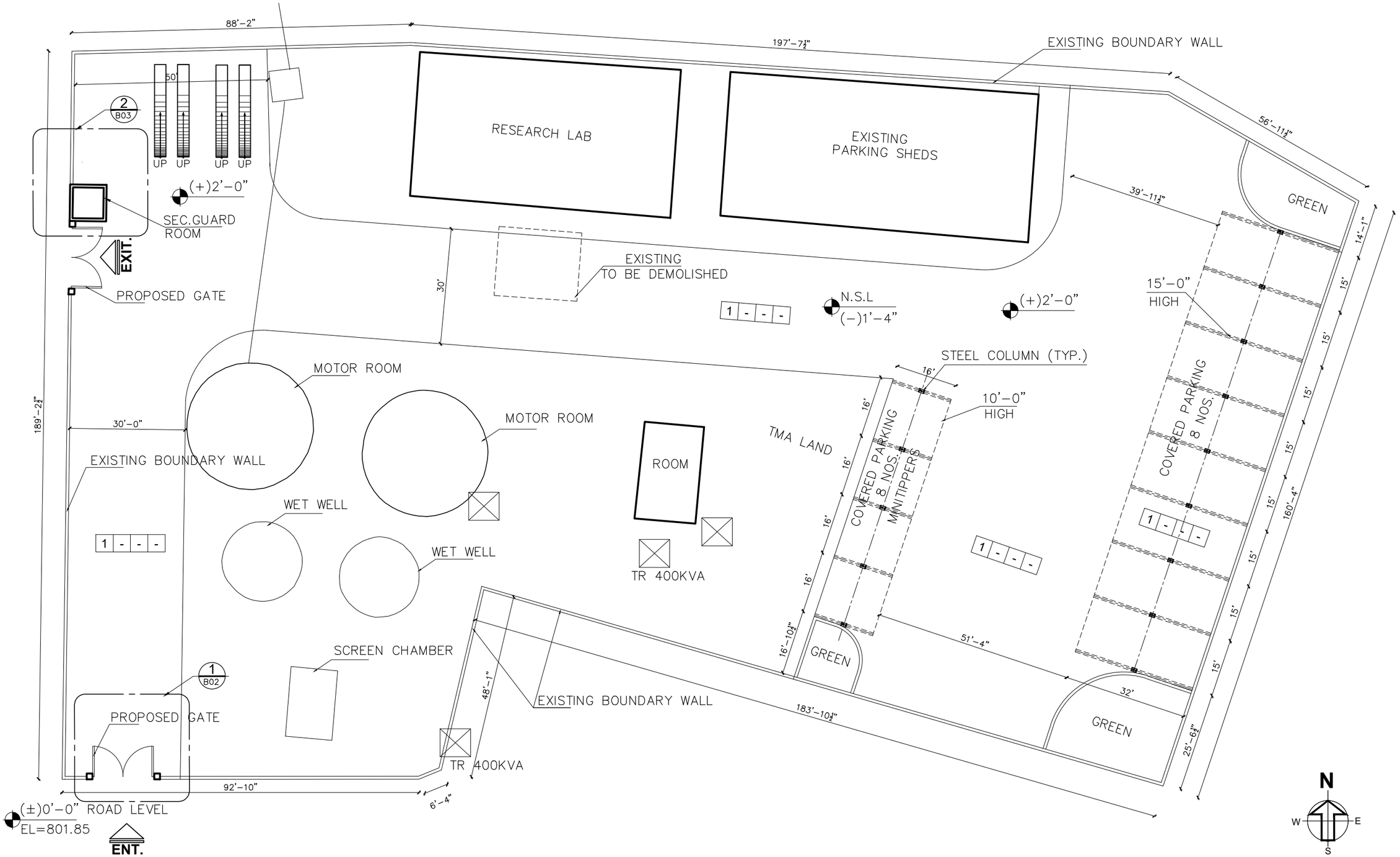

SCHEDULE OF INTERNAL FINISHES

LEGEND

SKIRTING WALL
FLOOR CEILING

① 800 mm THICK PRECAST INTERLOCKING CONCRETE PAVERS WITH CONCRETE CURB STONE WHERE MENTIONED (APPROVED MAKE & SHADE)

SHED SIZE	NO.OF SHEDS	NO.OF VEHICLES
15'x32'	08 NOS.	08 NOS.
16'x16'	04 NOS.	08 NOS.
TOTAL NOS. OF VEHICLES = 16 NOS.		

NOTE:

1- ROAD LEVEL IS ASSUMED AS (±)0'-0" REFERENCE TO EL = 801.85 GIVEN ON SURVEY PLAN.

2- TOTAL SITE AREA=09.80 KANAL

3- PROJECT AREA =4.65 KANAL

REFERENCE DRAWINGS	REV NO.	DATE	DESCRIPTION	BY	CKD.	APPR.

PROGRAM MANAGEMENT UNIT, PUNJAB INTERMEDIATE CITIES IMPROVEMENT INVESTMENT PROGRAM (PICIIP), LOCAL GOVERNMENT AND COMMUNITY DEVELOPMENT (LG & CD) DEPARTMENT, PUNJAB)

CONSULTING SERVICES FOR ENGINEERING, PROCUREMENT AND CONSTRUCTION MANAGEMENT (EPCM) CONSULTANT.

PARKING SHEDS & ALLIED STRUCTURES
ALLAMA IQBAL TOWN, SIALKOT
LAYOUT PLAN

NATIONAL ENGINEERING SERVICES PAKISTAN (PVT) LTD LAHORE

DESN. NESPAK	RECOMMENDED	VER./CKD.	APPROVED
DWN. dilsher			
FILE			
CKD.			
SUBM.			

DATE	DRAWING NO.	REV.
OCT. 2021	3976/311/TD/B01	0

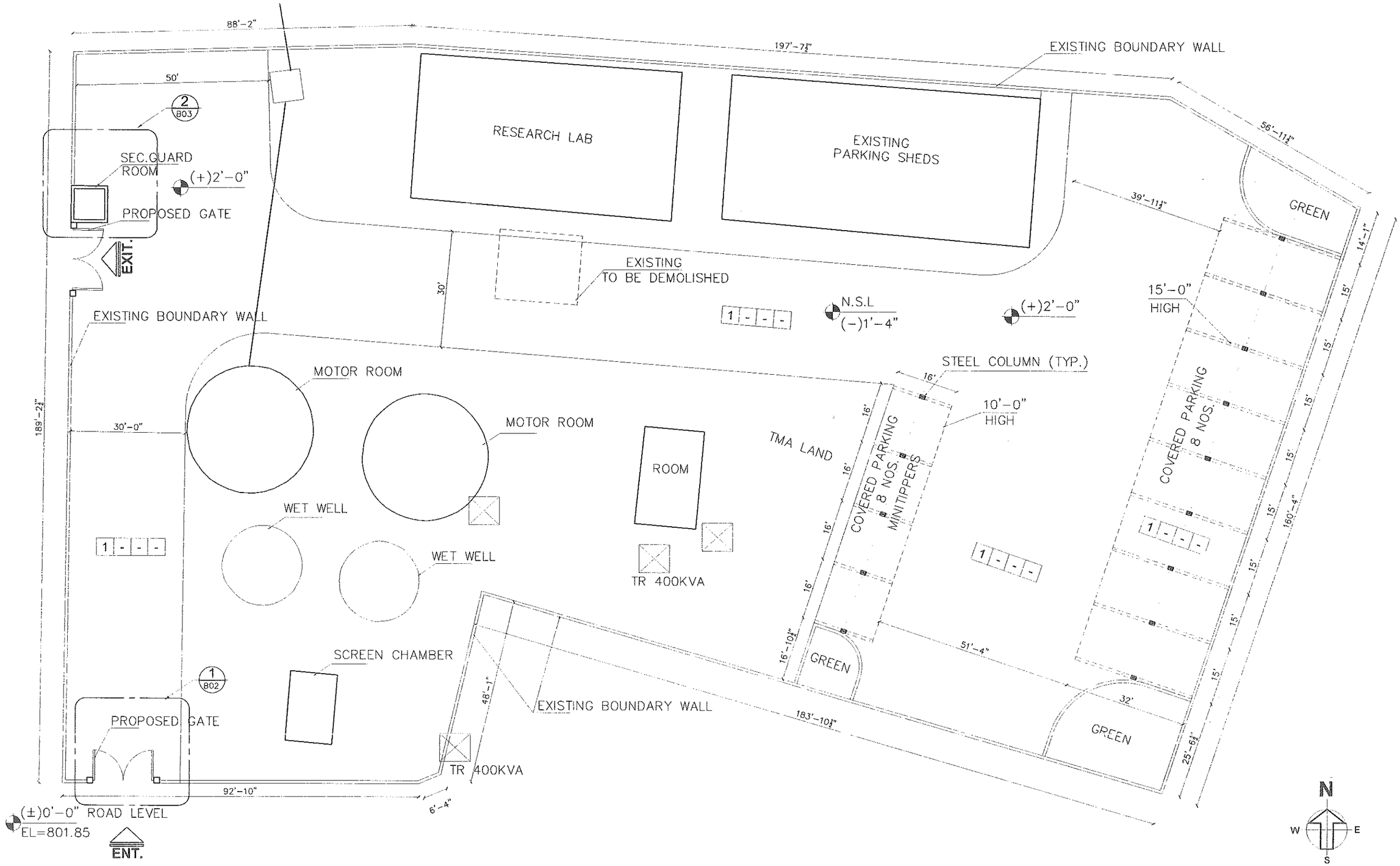

SCHEDULE OF INTERNAL FINISHES

LEGEND

SKIRTING WALL

FLOOR | CEILING

① 800 mm THICK PRECAST INTERLOCKING CONCRETE PAVERS WITH CONCRETE CURB STONE WHERE MENTIONED (APPROVED MAKE & SHADE)

SHED SIZE	NO.OF SHEDS	NO.OF VEHICLES
15'x32'	08 NOS.	08 NOS.
16'x16'	04 NOS.	08 NOS.

TOTAL NOS. OF VEHICLES = 16 NOS.

NOTE:

1- ROAD LEVEL IS ASSUMED AS (±)0'-0" REFERENCE TO EL = 801.85 GIVEN ON SURVEY PLAN.

2- TOTAL SITE AREA=09.80 KANAL

REFERENCE DRAWINGS	REV. NO.	DATE	DESCRIPTION	BY	CKD.	APPR.

PROGRAM MANAGEMENT UNIT, PUNJAB INTERMEDIATE CITIES IMPROVEMENT INVESTMENT PROGRAM (PICIIP), LOCAL GOVERNMENT AND COMMUNITY DEVELOPMENT (LG & CD) DEPARTMENT, PUNJAB)

CONSULTING SERVICES FOR ENGINEERING, PROCUREMENT AND CONSTRUCTION MANAGEMENT (EPCM) CONSULTANT.

PARKING SHEDS & ALLIED STRUCTURES
ALLAMA IQBAL TOWN, SIALKOT
LAYOUT PLAN

NESPAK

DESN. NESPAK	RECOMMENDED	VER./CKD.	APPROVED
DWN. dilsher			
FILE			
CKD.			
SUBM.			

DATE	DRAWING NO.	REV.
AUGUST. 2020	3976/311/TD/B01	0

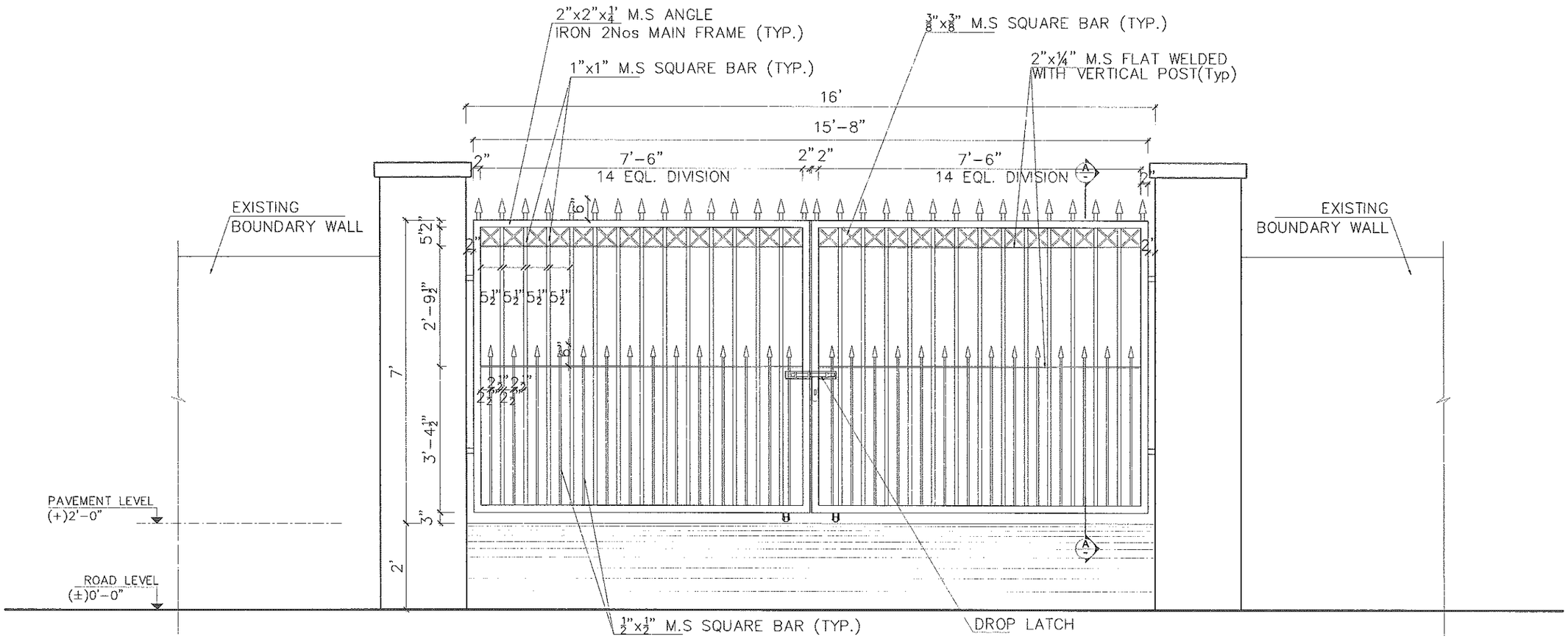

E1 ELEVATION
SCALE 1/2"=1'-0"

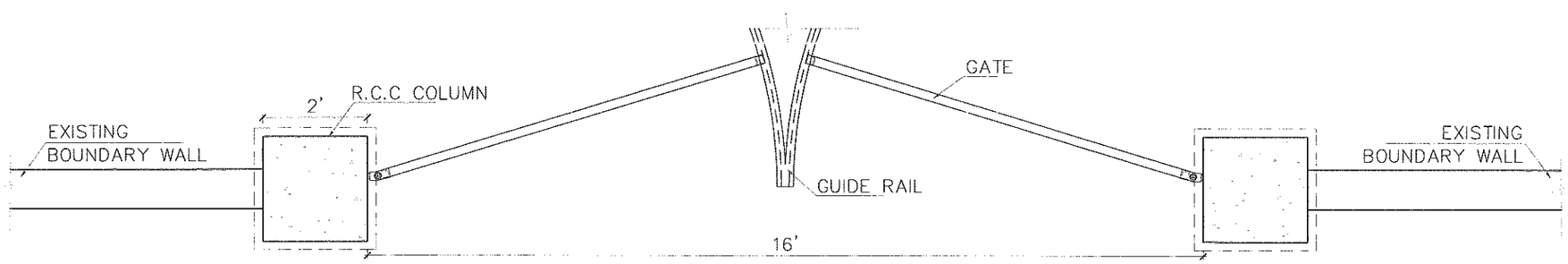

1 B01 DETAIL
DETAIL PLAN OF MAIN GATE
SCALE 1/2"=1'-0"

PROGRAM MANAGEMENT UNIT, PUNJAB INTERMEDIATE CITIES IMPROVEMENT INVESTMENT PROGRAM (PICIIP), LOCAL GOVERNMENT AND COMMUNITY DEVELOPMENT (LG & CD) DEPARTMENT, PUNJAB)

CONSULTING SERVICES FOR ENGINEERING, PROCUREMENT AND CONSTRUCTION MANAGEMENT (EPCM) CONSULTANT.

PARKING SHEDS & ALLIED STRUCTURES
ALLAMA IQBAL TOWN, SIALKOT
PLAN & ELEVATION OF MAIN GATE

NESPAK

DESN. NESPAK	RECOMMENDED	VER./CKD.	APPROVED
DWN. dilsher			
FILE	DATE	DRAWING NO.	REV.
CKD.	JULY. 2020	3976/311/TD/B02	0
SUBM.			

REFERENCE DRAWINGS	REV NO.	DATE	DESCRIPTION	BY	CKD.	APPR.

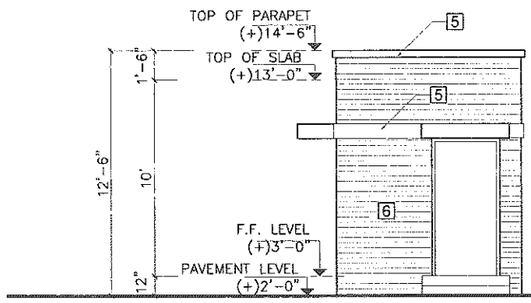

1 ELEVATION
SCALE: 1/4"=1'-0"

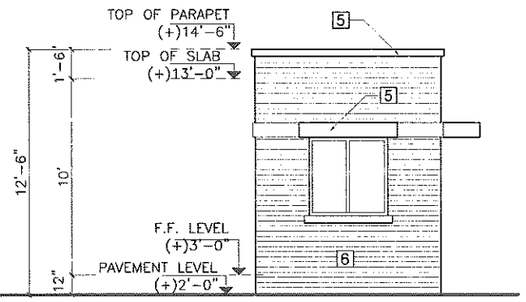

2 ELEVATION
SCALE: 1/4"=1'-0"

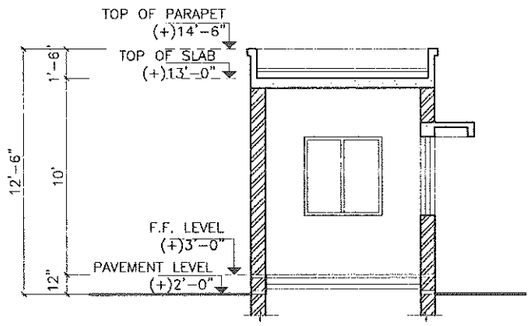

A SECTION
SCALE: 1/4"=1'-0"

SCHEDULE OF INTERNAL AND EXTERNAL FINISHES

LEGEND

SKIRTING FLOOR WALL CEILING

1. 12"x12"x3/4" CHINA VERONA MARBLE
2. 4"X12"X1/2" CHINA VERONA MARBLE SKIRTING
3. VINYL EMULSION PAINT ON C.S PLASTER (APPROVED MAKE & SHADE)
4. 2" THICK P.C.C (1:2:4)
5. WEATHER SHIELD PAINT OF APPROVED (APPROVED MAKE & SHADE)
6. DEEP STRUCK POINTING OF CEMENT SURKHI

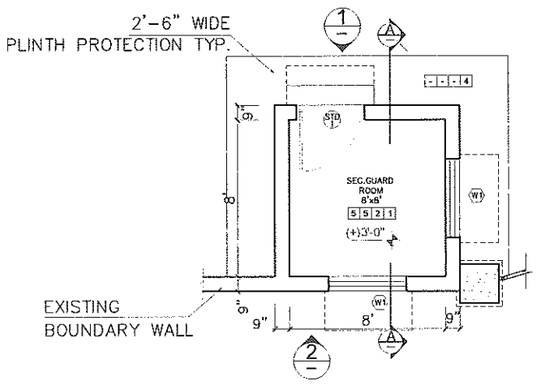

2 DETAIL PLAN
B01 SEC.GUARD ROOM
SCALE: 1/4"=1'-0"

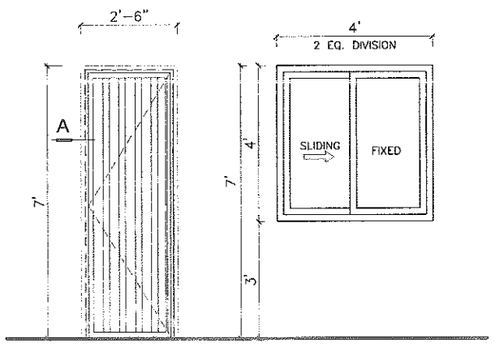

STD 1
STEEL DOOR

W 1
ALUMINUM GLAZED WINDOW

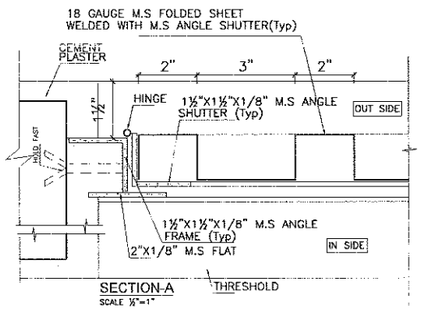

SECTION-A
SCALE ½"=1"

REFERENCE DRAWINGS	REV NO	DATE	DESCRIPTION	BY	CKD.	APPR.

PROGRAM MANAGEMENT UNIT, PUNJAB INTERMEDIATE CITIES IMPROVEMENT INVESTMENT PROGRAM (PICIIP), LOCAL GOVERNMENT AND COMMUNITY DEVELOPMENT (LG & CD) DEPARTMENT, PUNJAB)

CONSULTING SERVICES FOR ENGINEERING, PROCUREMENT AND CONSTRUCTION MANAGEMENT (EPCM) CONSULTANT.

PARKING SHEDS & ALLIED STRUCTURES
ALLAMA IQBAL TOWN, SIALKOT
SEC.GUARD ROOM PLAN, ELEVATIONS, SECTION& DETAILS

NESPAK

DESN. NESPAK	RECOMMENDED	VER./CKD.	APPROVED
DWN. dilshw			
FILE			
CKD.			
SUBM.			

DATE	DRAWING NO.	REV.
JULY.2020	3976/311/TD/B03	0

GENERAL NOTES:

1. THIS DRAWING SHALL BE READ IN CONJUNCTION WITH ITEMS OF BILL OF QUANTITIES AND TECHNICAL SPECIFICATION
2. THIS DRAWING SHALL BE COORDINATED WITH OTHER DISCIPLINES WORKS FOR ROUTING, SPACING AND INSTALLATIONS
3. THE MINIMUM SIZE OF THE PVC CONDUIT SHALL BE 25mm (1") DIA.
4. LIGHT CIRCUIT WIRING SHALL BE WITH 3 x 2.5 mm Sq & LIGHT POINT WIRING SHALL BE WITH 3x1.5 mm. Sq SINGLE CORE STRANDED CU. PVC CABLES
5. ALL POWER SOCKETS (15/20Amp) SHALL BE WIRED WITH 3 x 6mm.Sq LIGHT PLUG (10/13Amp) SOCKETS FIRST POINT SHALL BE WIRED WITH 3 x 4mm.Sq & 10Amp. SOCKETS POINT TO POINT WIRED WITH 3 x 2.5mm. Sq STRANDED CU. PVC CABLES
6. ALL SINGLE CORE WIRES SHALL HAVE THE FOLLOWING COLOURS.
   PHASE WIRES..... RED, YELLOW & BLUE
   NEUTRAL WIRES.....BLACK
   C.P.C.....GREEN/YELOW (AS PER B.O.Q)
7. THE WIRING SHALL BE STARTED ONLY AFTER THE CONDUIT SYSTEM IS COMPLETELY INSTALLED AND ALL OUTLET BOXES ETC. ARE FIXED IN THEIR POSITIONS.
8. ALL POWER/LIGHT PLUG SOCKETS WIRING SHALL BE SEGREGATED AND HAVE INDEPENDENT WIRES RIGHT FROM MINIATURE CIRCUIT BREAKERS IN DISTRIBUTION BOARD.
9. ACTUAL LOCATION OF ALL OUTLETS MUST BE VERIFIED BY THE CONTRACTOR SITE ENGINEER BEFORE INSTALLATION COMMENCES
10. THE MOUNTING HEIGHT OF THE SOCKET OUTLETS SHALL BE MINIMUM 300mm (FFL)
11. THE MOUNTING HEIGHT OF THE LIGHTING SWITCHES SHALL BE MINIMUM 1100mm (FFL)
12. NO LUBRICATION EXCEPT AS RECOMMENDED BY MANUFACTURER SHALL BE USED ON WIRES FOR REDUCING FRICTION. NO OIL OR SOAP OF ANY KIND WILL BE ALLOWED ON WIRES FOR THIS PURPOSE.
13. THE CONTRACTOR SHALL SUBMIT CONDUITS LAYOUT PLAN BASED UPON THE ELECTRIFICATION DRAWINGS FOR THE APPROVAL OF ELECTRICAL ENGINEER, BEFORE POURING OF ROOF SLABS, WALL AND COLUMNS.
14. ALL THE ELECTRICAL WORKS SHALL BE EXECUTED IN STRICT ACCORDANCE WITH THE PROJECT SPECIFICATION
15. THE ELECTRICAL EQUIPMENT SHALL BE SUPPLIED FROM APPROVED MANUFACTURER AS PER APPLICABLE STANDARDS AND CODES

LEGEND

SYMBOL	DESCRIPTION
	MAIN PANEL BOARD(MPB)
	SUB MAIN PANEL BOARD(SMPB)
	DISTRIBUTION BOARD (DB)
	MOULDED CASE CIRCUIT BREAKER
V	VOLTMETER
A	AMMETER
	SELECTOR SWITCH
	WALL BRACKET FAN
	EXHAUST FAN
	SINGLE POLE 1-WAY SWITCH
	15/20 AMP 3 PIN SINGLE PHASE, NEUTRAL & EARTH SWITCH SOCKET UNIT (AWAY FROM SWITCH BOARD)
	10/13 AMPS 3 PIN SINGLE PHASE SWITCH SOCKET UNIT (AWAY FROM SWITCH BOARD)

LIGHTING FITTINGS SCHEDULE

SYMBOL	DESCRIPTION
	WALL BRACKET 18W LED LIGHT
	BATTEN SURFACE MOUNTED 18W LED LIGHT
	BATTEN SURFACE MOUNTED 10W LED LIGHT ABOVE MIRROR
	WATER TIGHT 20W IP65 LED LIGHT
	SURFACE MOUNTED DOWN LIGHTER 18W LED LIGHT

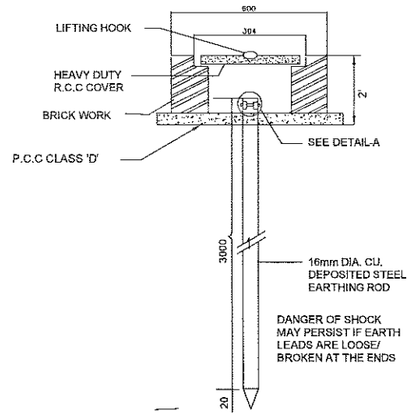

ROD TYPE EARTH POINT DETAIL FOR DB,S

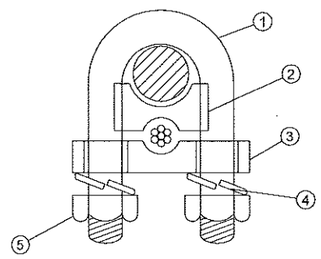

DETAIL -'A'

ITEM NO.	ITEM NAME	MATERIAL
1	U-BOLT	MILD STEEL
2	SPACER	CAST IRON
3	BASE	MILD STEEL
4	SPRING WASHER	CARBON STEEL
5	NUT	MILD STEEL

REFERENCE DRAWINGS	REV NO.	DATE	DESCRIPTION	BY	CKD.	APPR.

PROGRAM MANAGEMENT UNIT, PUNJAB INTERMEDIATE CITIES IMPROVEMENT INVESTMENT PROGRAM (PICIIP), LOCAL GOVERNMENT AND COMMUNITY DEVELOPMENT (LG & CD) DEPARTMENT, PUNJAB)

CONSULTING SERVICES FOR ENGINEERING, PROCUREMENT AND CONSTRUCTION MANAGEMENT (EPCM) CONSULTANT.

COVERED PARKING SHEDS ALLAMA IQBAL TOWN,SIALKOT
LEGEND, GENERAL NOTES LIGHTING FITTING FOR SHEDULE & EARTH POINT DETAILS

NESPAK

DESN. NESPAK	RECOMMENDED	VER./CKD.	APPROVED
DWN. SA			
FILE	DATE	DRAWING NO.	REV.
CKD.	SEP. 2020	3976/161/TD/5E001	0
SUBM.			

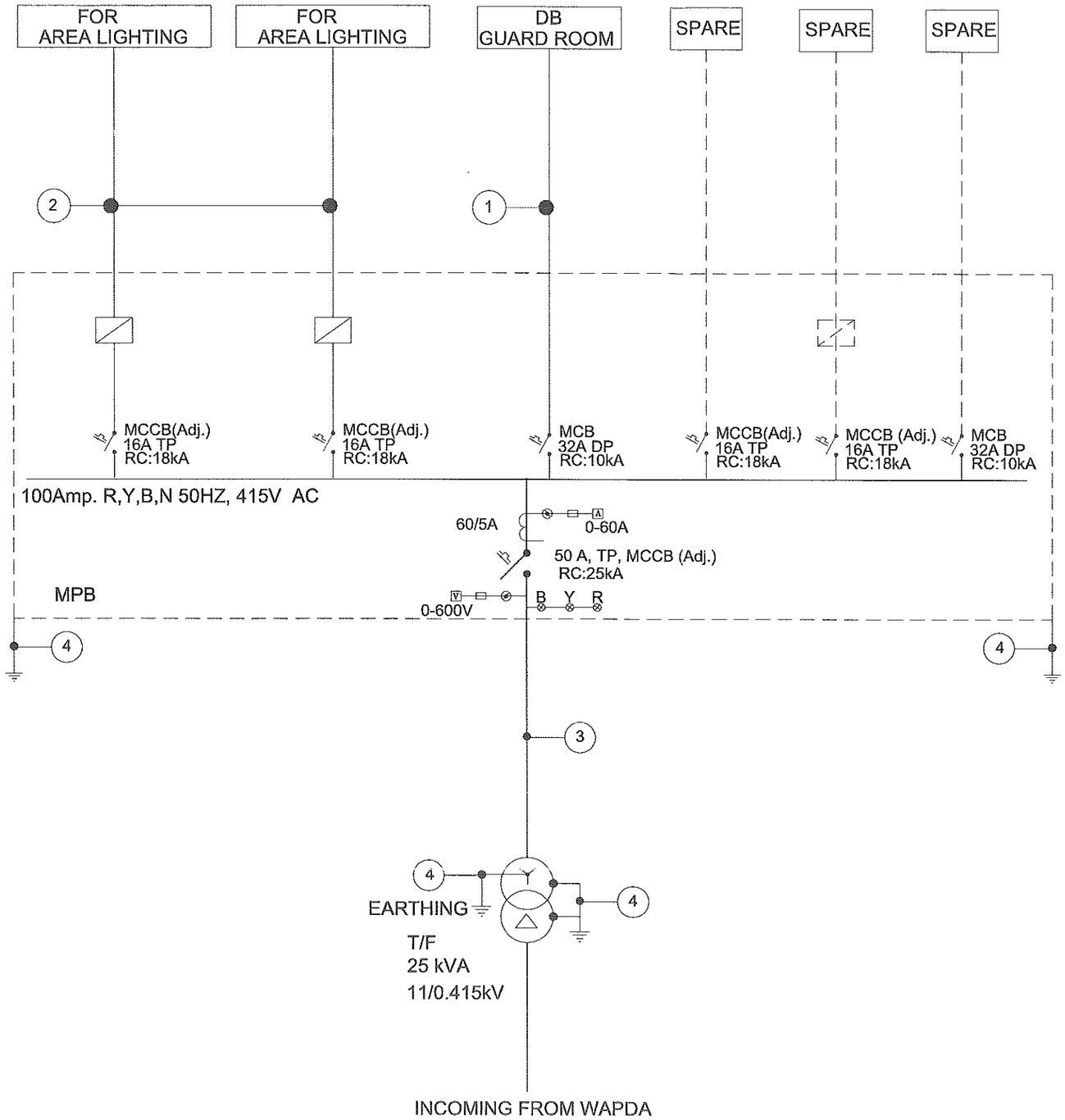

LEGEND:

SYMBOL	DESCRIPTION
	INDICATING LIGHT
	CURRENT TRANSFORMER
	MOULDED CASE CIRCUIT BREAKER
	VOLT METER WITH SELECTOR SWITCH & FUSE
	AMMETER WITH SELECTOR SWITCH & FUSE

LEGEND:

1. 2 CORE 10 mm2 Cu./PVC/PVC+ 1 Core 10 mm2 Cu./PVC AS (CPC).
2. 4 CORE 10 mm2 Cu./PVC/PVC+ 1 Core 10 mm2 Cu./PVC AS (CPC).
3. 4 CORE 16 mm2 Cu./PVC/PVC+ 1 Core 16 mm2 Cu./PVC AS (CPC).
4. 1 Core 25 mm2 Cu./PVC AS (CPC/ECC).

NOTES:-

1. THIS DRAWING IS FOR INDICATIVE DESIGN MODEL AND SHALL BE READ IN CONJUNCTION WITH ALL OTHER DRAWINGS, SPECIFICATIONS AND ITEMS OF BILL OF QUANTITIES.
2. THE CONTRACTOR SHALL BE SUBMITTED SHOP DRAWINGS, VOLTAGE DROP CALCULATION TO THE ENGINEER AT THE TIME OF CONTRACT AWARD AND BEFORE THE WORK COMMENCES AT SITE.
3. THE ELECTRICAL WORKS SHALL BE EXECUTED IN LINE WITH THE PROJECT SPECIFICATIONS
4. THE PUMPING STATION EQUIPMENT ALONG WITH MOTORS, MOTOR CONTROL CENTERS/MOTOR CONTROL UNITS AND ASSOCIATED STARTING DEVICES ARE NOT INCLUDED IN ELECTRICAL SCOPE OF WORK.
5. THE LOCATION OF THE EQUIPEMENTS SHOWN ON THE LAYOUT PLAN IS TENTATIVE LOCATION. LOCATION OF THE TRANSFORMER, DG SETS & PANEL BOARD SHALL BE FINALIZED AT PER SITE CONDITION.

REFERENCE DRAWINGS	REV NO.	DATE	DESCRIPTION	BY	CKD.	APPR.

PROGRAM MANAGEMENT UNIT, PUNJAB INTERMEDIATE CITIES IMPROVEMENT INVESTMENT PROGRAM (PICIIP), LOCAL GOVERNMENT AND COMMUNITY DEVELOPMENT (LG & CD) DEPARTMENT, PUNJAB)

CONSULTING SERVICES FOR ENGINEERING, PROCUREMENT AND CONSTRUCTION MANAGEMENT (EPCM) CONSULTANT.

COVERED PARKING SHEDS ALLAMA IQBAL TOWN,SIALKOT
SINGLE LINE DIAGRAM

NESPAK

DESN. NESPAK	RECOMMENDED	VER./CKD.	APPROVED
DWN. SA			
FILE	DATE	DRAWING NO.	REV.
CKD.	SEP. 2020	3976/161/TD/5E002	0
SUBM.			

LEGEND:-	
SYMBOL	DESCRIPTION
	10 METER HIGH SINGLE ARM WITH 90W LUMINAIRE HOT DIP GALVANIZED STEEL OCTAGONAL POLE
	LED FLOOD LIGHT 30W (IP-65) WITH COMPLETE
	LED GATE LIGHT 100W (IP-65) WITH COMPLETE

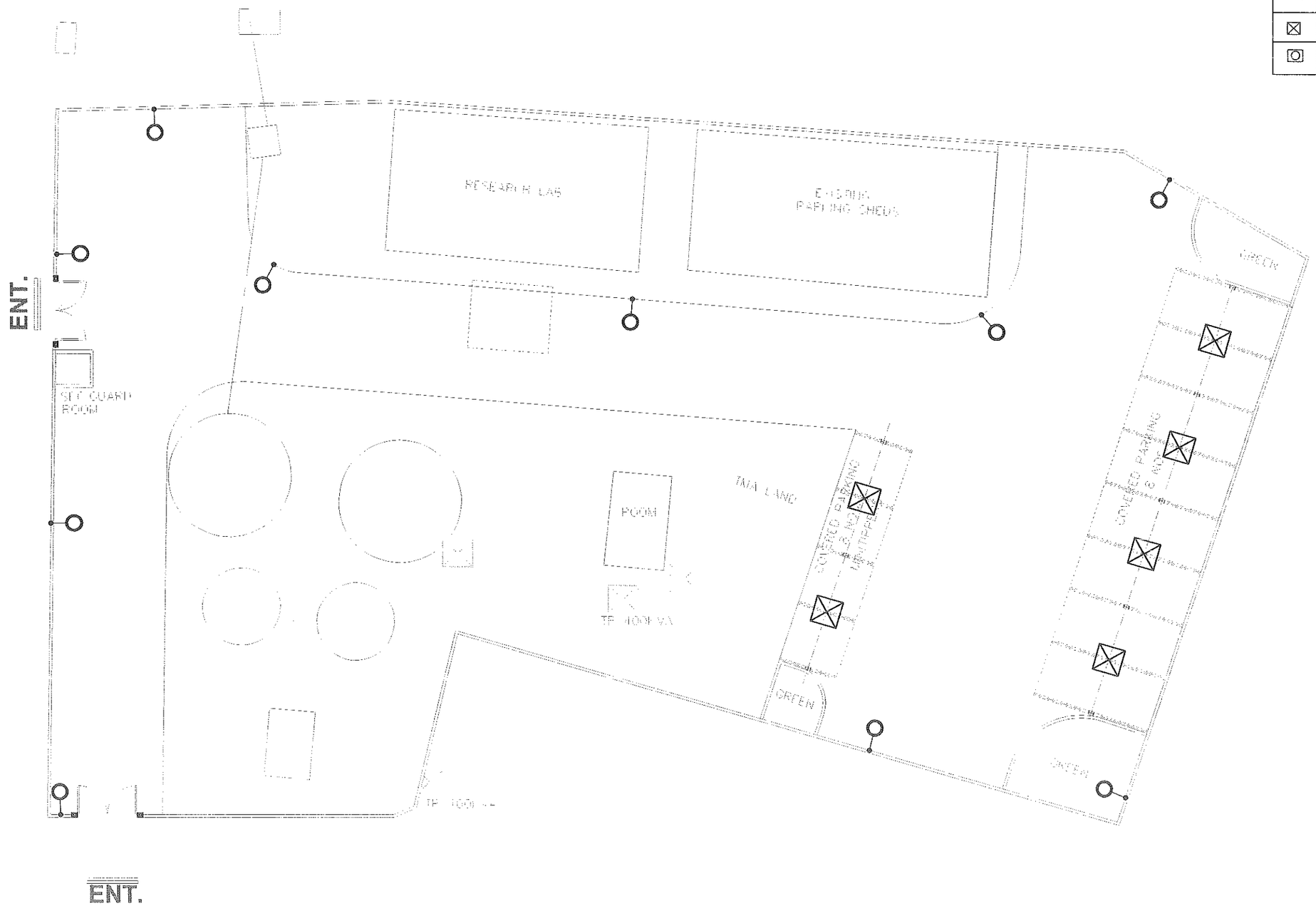

PROGRAM MANAGEMENT UNIT, PUNJAB INTERMEDIATE CITIES IMPROVEMENT INVESTMENT PROGRAM (PICIIP), LOCAL GOVERNMENT AND COMMUNITY DEVELOPMENT (LG & CD) DEPARTMENT, PUNJAB)

CONSULTING SERVICES FOR ENGINEERING, PROCUREMENT AND CONSTRUCTION MANAGEMENT (EPCM) CONSULTANT.

COVERED PARKING SHEDS ALLAMA IQBAL TOWN,SIALKOT
AREA LIGHTING LAYOUT PLAN

NESPAK

REFERENCE DRAWINGS	REV NO.	DATE	DESCRIPTION	BY	CKD.	APPR.

DESN. NESPAK	RECOMMENDED	VER./CKD.	APPROVED
DWN. SA			
FILE			
CKD.	DATE	DRAWING NO.	REV.
SUBM.	SEP. 2020	3976/161/TD/5E003	0

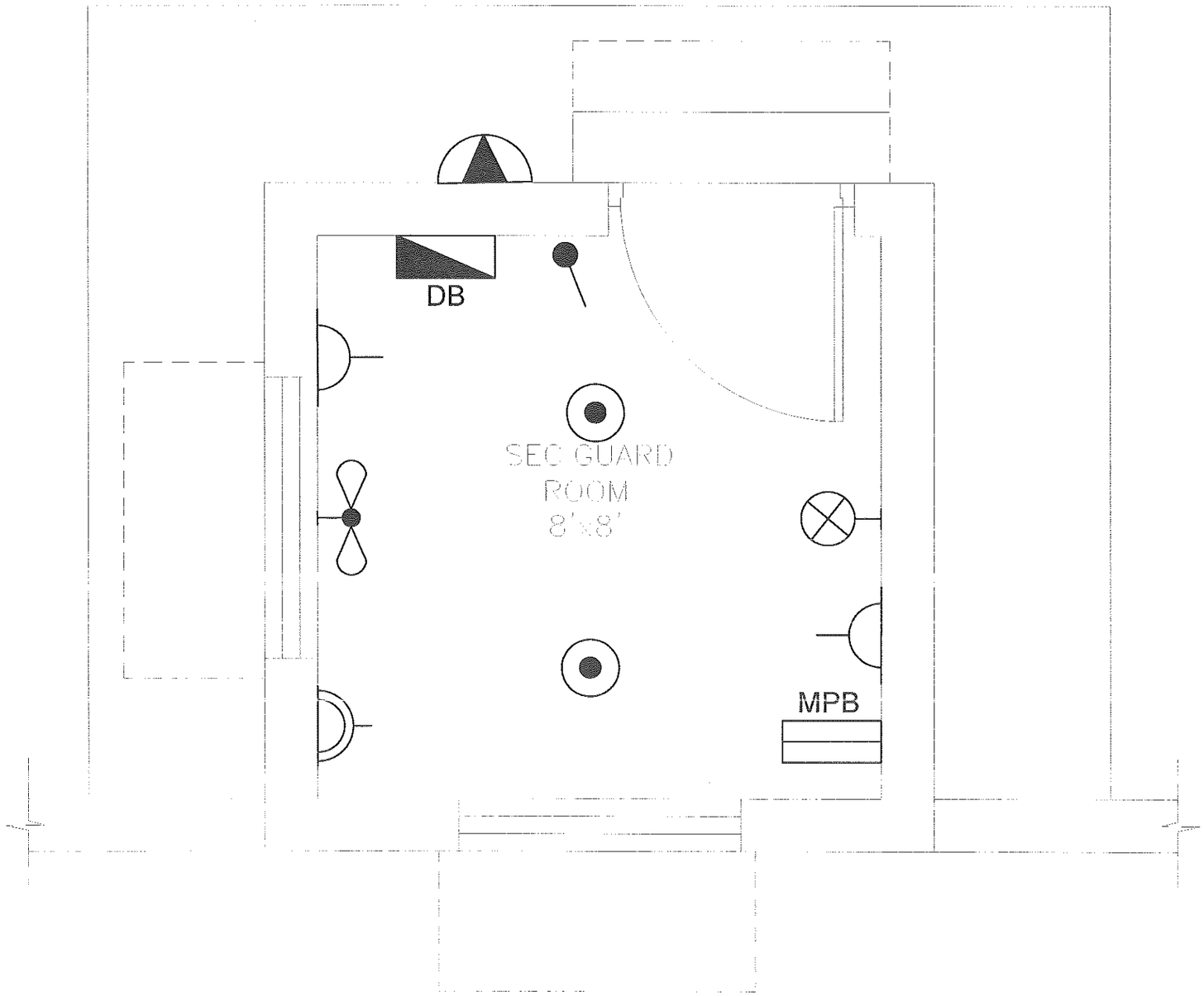

REFERENCE DRAWINGS	REV NO.	DATE	DESCRIPTION	BY	CKD.	APPR.

PROGRAM MANAGEMENT UNIT, PUNJAB INTERMEDIATE CITIES IMPROVEMENT INVESTMENT PROGRAM (PICIIP), LOCAL GOVERNMENT AND COMMUNITY DEVELOPMENT (LG & CD) DEPARTMENT, PUNJAB)

CONSULTING SERVICES FOR ENGINEERING, PROCUREMENT AND CONSTRUCTION MANAGEMENT (EPCM) CONSULTANT.

COVERED PARKING SHEDS AT ALLAMA IQBAL TOWN, SIALKOT

GUARD ROOM
ELECTRIFICATION LAYOUT PLAN

NESPAK

DESN. NESPAK	RECOMMENDED	VER./CKD.	APPROVED
DWN. SA			
FILE			
CKD.	DATE	DRAWING NO.	REV.
SUBM.	SEP. 2020	3976/161/TD/5E004	0

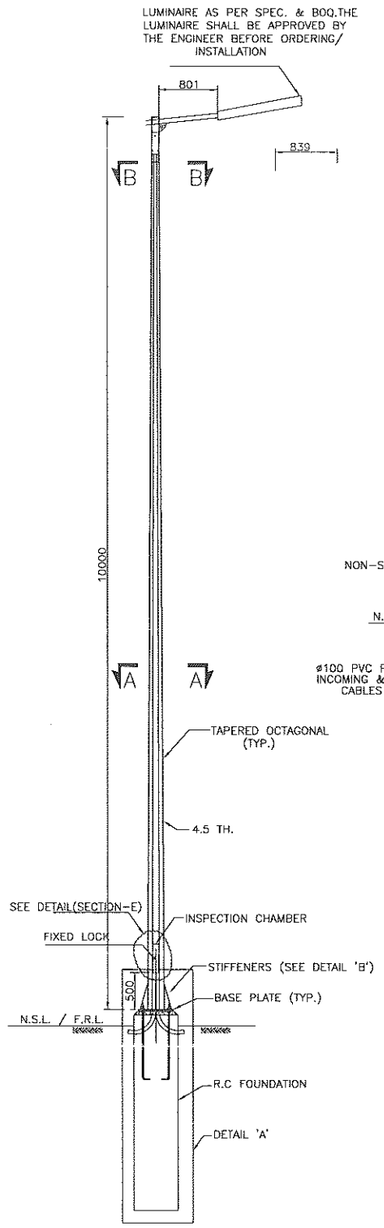

SINGLE LUMINAIRE HOT DIP GALVANIZED STEEL OCTAGONAL POLE

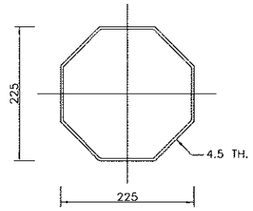

SECTION A–A

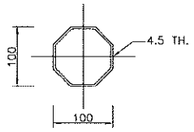

SECTION B–B

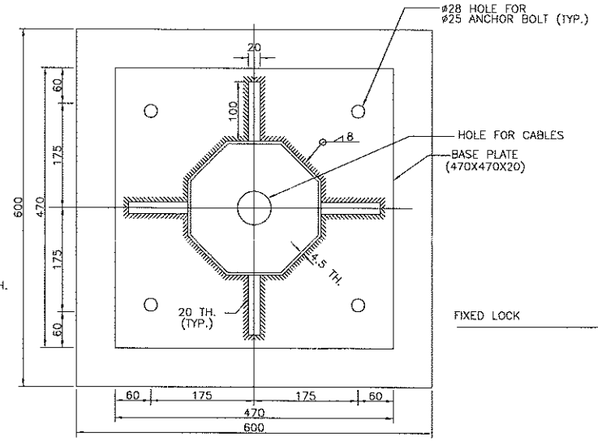

SECTION C–C

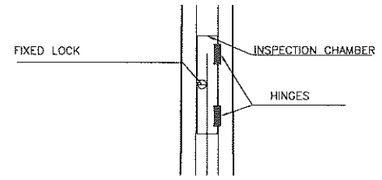

SECTION–E

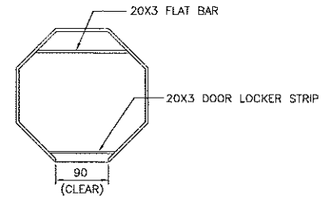

SECTION D–D

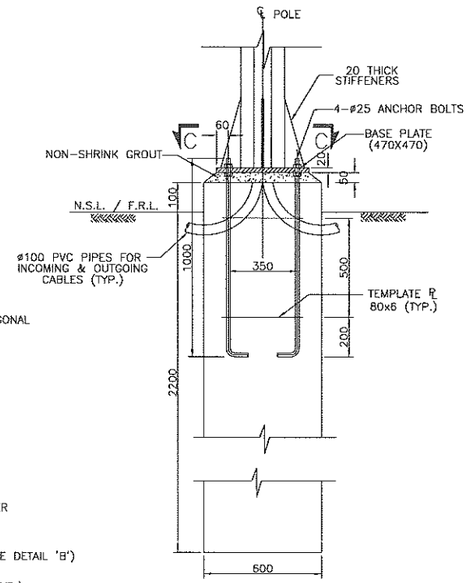

DETAIL–A
(CONCRETE OUTLINE)

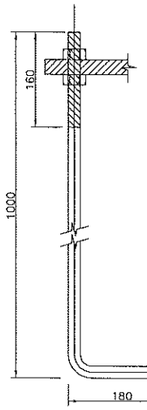

ANCHOR BOLT

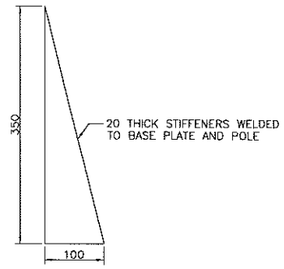

DETAIL–B

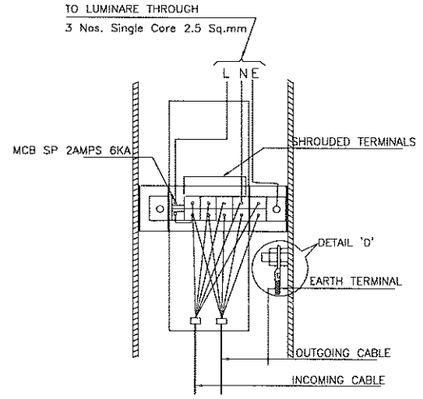

DETAIL OF INSPECTION CHAMBER

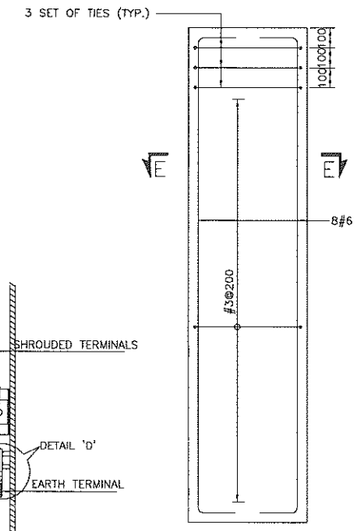

FOUNDATION
(REINFORCEMENT)

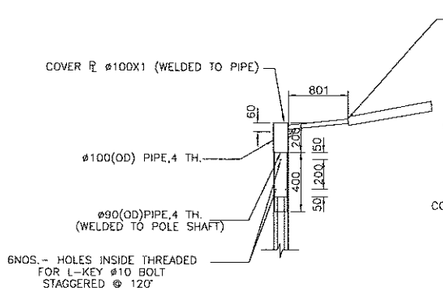

DETAIL–C

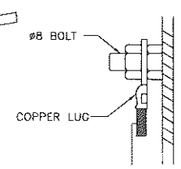

DETAIL–D

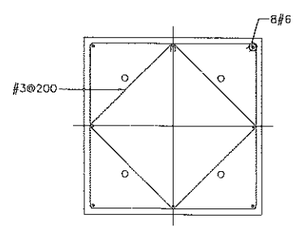

SECTION E–E

NOTES

1. FOR GENERAL NOTES REFER DRAWING NO. G001.
2. ALL DIMENSIONS ARE IN MILLIMETERS UNLESS OTHERWISE SPECIFIED.
3. UNLESS OTHERWISE NOTED, CONCRETE SHALL BE CLASSIFIED AS FOLLOWS.
   CONCRETE CLASS 28 DAYS (15x30 CM) CYLINDER STRENGTH Kg/sq. Cm
   REINFORCED A 210 (3000 psi)
4. THE STEEL FOR POLE & BASE PLATE SHALL BE OF YIELD STRENGTH OF 350MPa(50Ksi). & SHALL CONFORM TO ASTM A36 STEEL.
5. THE ANCHOR BOLTS SHALL CONFORM TO ASTM A307.
6. ALL WELDING SHALL CONFORM TO THE APPLICABLE PROVISIONS OF A.W.S (AMERICAN WELDING SOCIETY) CODE.
7. HOT DIP GALVANIZATION SHALL CONFORM TO BS EN ISO 1461 (IN SIDE & OUT SIDE) OR IN ACCORDANCE WITH ASTM A123 AND A325.

REFERENCE DRAWINGS	REV NO.	DATE	DESCRIPTION	BY	CKD.	APPR.

PROGRAM MANAGEMENT UNIT, PUNJAB INTERMEDIATE CITIES IMPROVEMENT INVESTMENT PROGRAM (PICIIP), LOCAL GOVERNMENT AND COMMUNITY DEVELOPMENT (LG & CD) DEPARTMENT, PUNJAB)

CONSULTING SERVICES FOR ENGINEERING, PROCUREMENT AND CONSTRUCTION MANAGEMENT (EPCM) CONSULTANT.

COVERED PARKING SHEDS ALLAMA IQBAL TOWN,SIALKOT
DETAILS OF 10M CONICAL
OCTAGONAL LIGHTING POLE SINGLE ARM

NESPAK

DESN. NESPAK	RECOMMENDED	VER./CKD.	APPROVED
DWN. SA			
FILE			
CKD.			
SUBM.	DATE SEP. 2020	DRAWING NO. 3976/161/TD/5E005	REV. 0

GENERAL NOTES (CCTV) SYSTEMS:

1. ALL DRAWING SHALL BE READ IN CONJUNCTION WITH ITEMS OF BILL OF QUANTITIES AND TECHNICAL SPECIFICATIONS.
2. THE CONTRACTOR SHALL PROCURE, TRANSPORT AND DELIVER EQUIPMENTS AND HARDWARE TO SITE, AFTER APPROVAL OF ENGINEERS.
3. All CCTV WORKS SHALL COMPLY WITH LATEST STANDARDS.
4. ALL CCTV SYSTEM DRAWING SHALL BE COORDINATED WITH OTHER DISCIPLINES WORKS FOR ROUTING, SPACING AND INSTALLATIONS.
5. THE MINIMUM SIZE OF INDOOR PVC CONDUIT SHALL BE 25mm (1") DIA.
6. ACTUAL LENGTH OF DUCT TRAY SHALL BE AS PER SITE REQUIREMENTS.

8. SUITABLE SEALENT SHALL BE USED AT THE ENDS AND IN JOINTS OF THE DUCT FOR PROTECTION FROM WATER AND RODENT.

10. ACTUAL LOCATION OF ALL CONDUITS MUST BE VERIFIED BY THE CONTRACTOR SITE ENGINEER BEFORE INSTALLATION COMMENCES.

11. THE CONTRACTOR SHALL SUBMIT SHOP DRAWINGS AND CONDUITS LAYOUT PLAN FOR ENGINEER APPROVAL BEFORE INSTALLATION

12. ALL THE CCTV WORKS SHALL BE EXECUTED IN STRICT COMPLIANCE WITH THE PROJECT SPECIFICATION.

13. THE CCTV EQUIPMENT SHALL BE SUPPLIED FROM APPROVED MANUFACTURER AND APPLICABLE STANDARDS AND CODES. AS MENTIONED IN TECHNICAL SPECIFICATION.

14. THE CONTRACTOR SHALL SUBMIT CO-ORDINATION SHOP DRAWING OF COMMUNICATION LAYOUT WITH POWER LAYOUT BEFORE EXECUTION OF WORKS.

15. EXACT LOCATION OF ALL CCTV EQUIPMENT SHALL BE DECIDED ON SITE.

16. MANUFACTURER'S RECOMMENDATIONS SHALL BE FOLLOWED FOR INSTALLATION OF ALL CCTV SYSTEMS.

17. All CCTV EQUIPMENT THAT MAY EXPOSE TO WEATHER CONDITIONS SHALL BE WLATHER PROOF.

18. THE CONTRACTOR SHALL COORDINATE AT SITE WITH OTHER SERVICES FOR EXACT LOCATION AND POSITION OF CONDUITS AND COMMUNICATION EQUIPMENT

19. WHERE CABLES ENTER THE BUILDING, THESE SHALL BE LAID IN CLASS D PROTECTIVE PIPE. HAND HOLES SHALL BE PROVIDED OUTSIDE THE BUILDING.

20. THE CONTRACTOR SHALL BE RESPONSIBLE FOR GENERAL INTEGRATION FOR ALL KIND OF SUB-SYSTEMS AND COMMUNICATION EQUIPMENT WITHIN THE SCOPE OF WORK INCLUDING INTERFACE WITH OTHER SYSTEMS.

21. EN 50174-2 RECOMMENDATION SHALL BE FOLLOWED FOR SEPARATION DISTANCE BETWEEN POWER AND COMMUNICATION CABLES.

22. LENGTH OF CAT-6 CABLE MUST NOT EXCEED 90M.

23. THESE DRAWINGS ARE FOR TENDER PURPOSE AND SHALL NOT BE USED FOR CONSTRUCTION.

REFERENCE DRAWINGS	REV NO.	DATE	DESCRIPTION	BY	CKD.	APPR.

PROGRAM MANAGEMENT UNIT, PUNJAB INTERMEDIATE CITIES IMPROVEMENT INVESTMENT PROGRAM (PICIIP), LOCAL GOVERNMENT AND COMMUNITY DEVELOPMENT (LG & CD) DEPARTMENT, PUNJAB)

CONSULTING SERVICES FOR ENGINEERING, PROCUREMENT AND CONSTRUCTION MANAGEMENT (EPCM) CONSULTANT.

COVERED PARKING SHEDS ALLAMA IQBAL TOWN, SIALKOT

IP BASED VIDEO SURVEILLANCE SYSTEM

NESPAK

DESN. NESPAK	RECOMMENDED	VER./CKD.	APPROVED
DWN. MUBASHAR AHMAD			
FILE			
CKD.			
SUBM.			

DATE	DRAWING NO.	REV.
SEP. 2020	3976/166/TD/ISOO	0

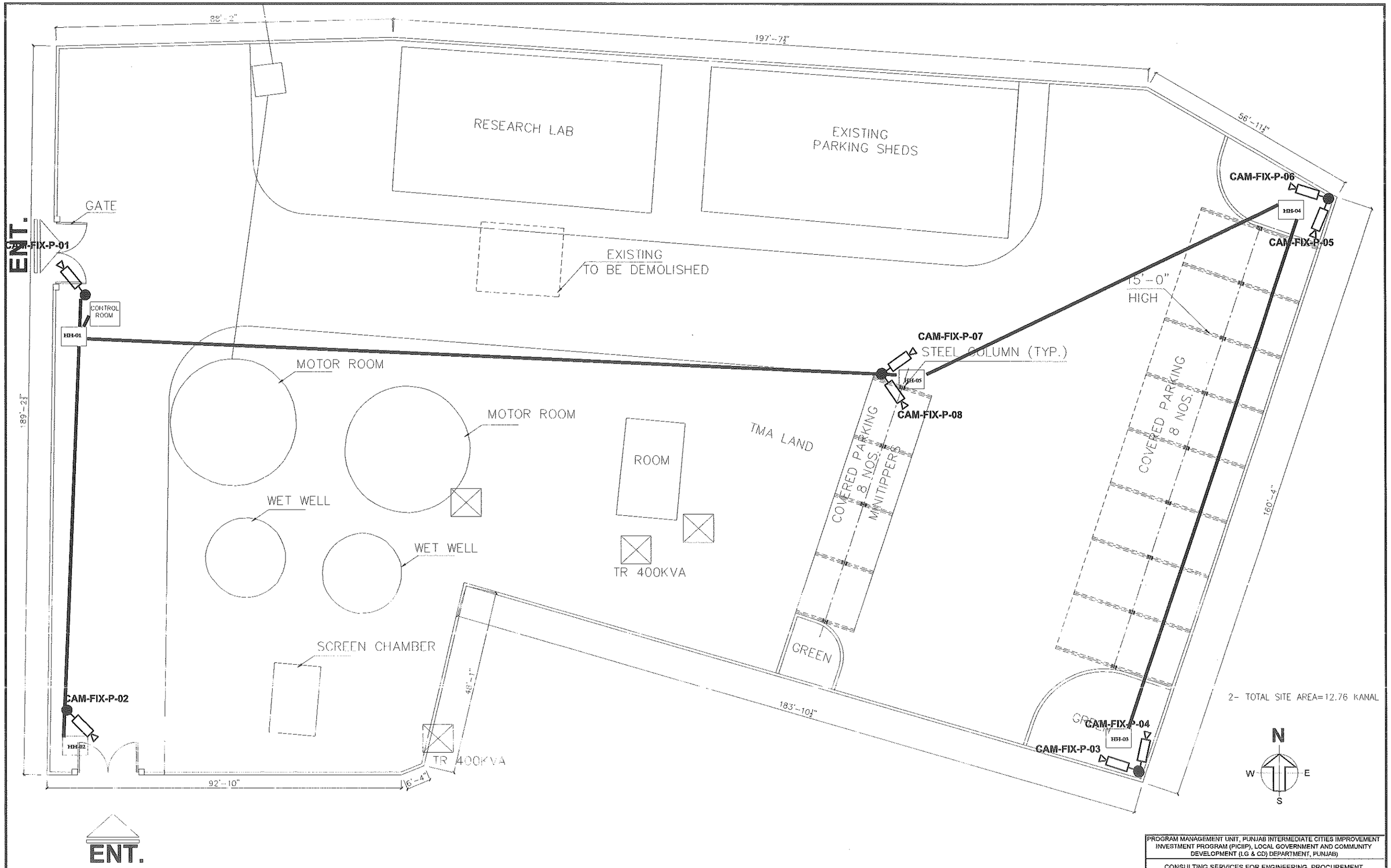

PROGRAM MANAGEMENT UNIT, PUNJAB INTERMEDIATE CITIES IMPROVEMENT INVESTMENT PROGRAM (PICIIP), LOCAL GOVERNMENT AND COMMUNITY DEVELOPMENT (LG & CD) DEPARTMENT, PUNJAB)

CONSULTING SERVICES FOR ENGINEERING, PROCUREMENT AND CONSTRUCTION MANAGEMENT (EPCM) CONSULTANT.

COVERED PARKING SHEDS ALLAMA IQBAL TOWN, SIALKOT
LAYOUT PLAN

NESPAK

	05	28-08-2020	AS SHOWN	Dilsher			
REFERENCE DRAWINGS	REV NO.	DATE	DESCRIPTION	BY	CKD.	APPR.	

DESN. NESPAK	RECOMMENDED	VER./CKD.	APPROVED
DWN. dilsher			
FILE			
CKD.			
SUBM.	DATE SEP. 2020	DRAWING NO. 3976/166/ID/PSO02	REV. 05

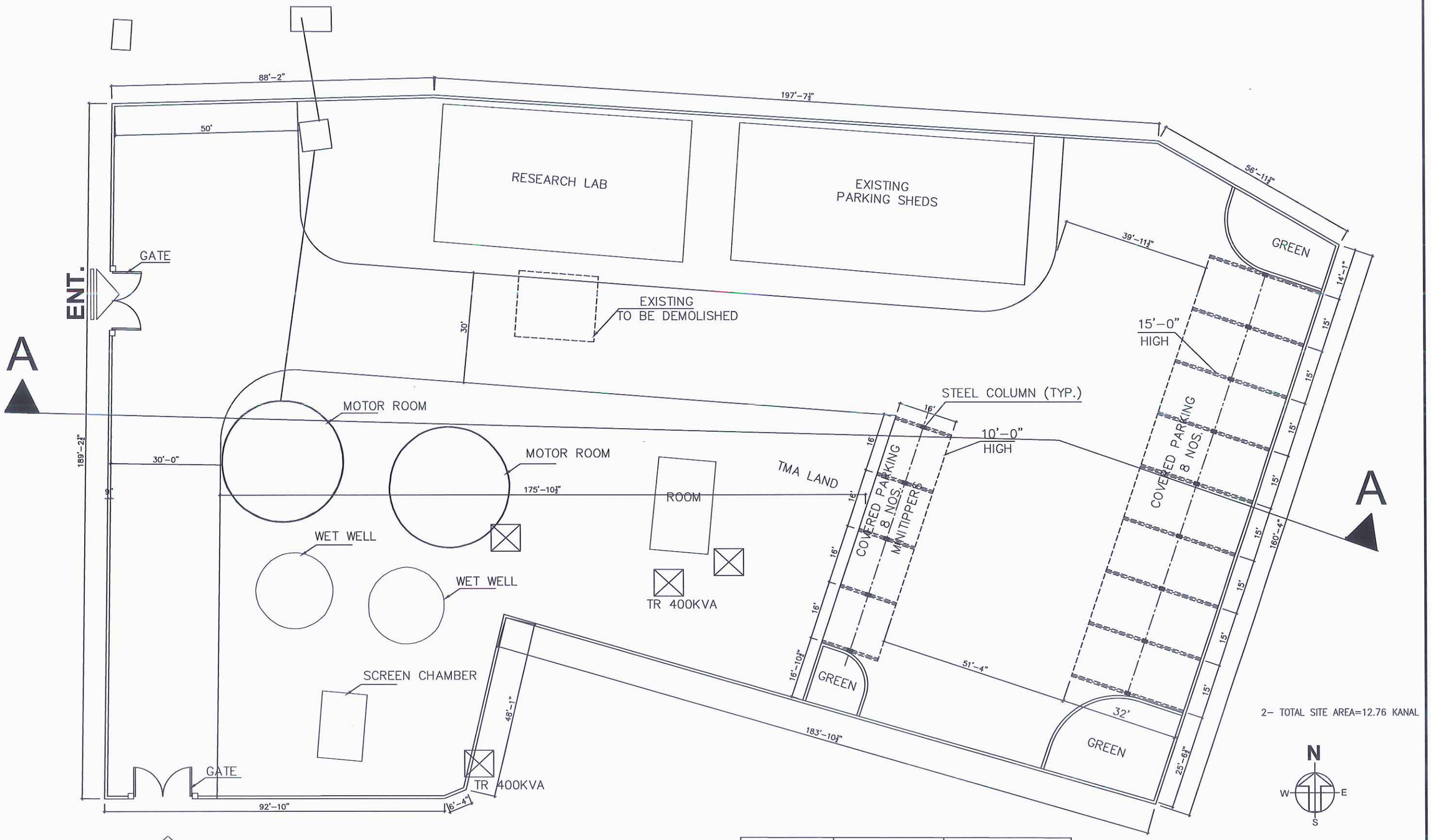

2- TOTAL SITE AREA=12.76 KANAL

SHED SIZE	NO.OF SHEDS	NO.OF VEHICLES
15'x32'	08 NOS.	08 NOS.
16'x16'	04 NOS.	08 NOS.
TOTAL NOS. OF VEHICLES = 16 NOS.		

NOTE:

1- TOTAL SITE AREA=09.80 KANAL

REFERENCE DRAWINGS	REV NO.	DATE	DESCRIPTION	BY	CKD.	APPR.

PROGRAM MANAGEMENT UNIT, PUNJAB INTERMEDIATE CITIES IMPROVEMENT INVESTMENT PROGRAM (PICIIP), LOCAL GOVERNMENT AND COMMUNITY DEVELOPMENT (LG & CD) DEPARTMENT, PUNJAB)

CONSULTING SERVICES FOR ENGINEERING, PROCUREMENT AND CONSTRUCTION MANAGEMENT (EPCM) CONSULTANT.

COVERED PARKING SHEDS ALLAMA IQBAL TOWN, SIALKOT

PLAN OF TYPICAL X-SECTION

NESPAK

DESN. NESPAK	RECOMMENDED	VER./CKD.	APPROVED
DWN. dilsher			Zulfiqar Ali
FILE	DATE	DRAWING NO.	REV.
CKD.	AUGUST, 2020	3976/102/PC-1/XS03	00
SUBM.			

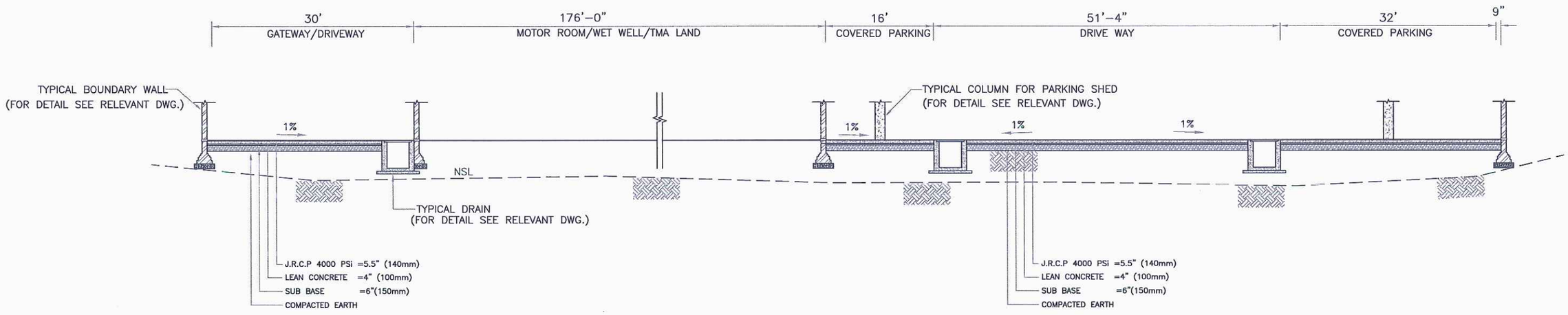

SECTION A–A

NOTES:–

1. ALL DIMENSIONS ARE IN FEET AND INCHES UNLESS OTHER WISE NOTED.
2. SUBGRADE/EMBANKMENT SHALL CONSIST OF SUITABLE MATERIAL HAVING MINIMUM SOAKED CBR OF 7% AT 95% MDD.

REFERENCE DRAWINGS	REV NO.	DATE	DESCRIPTION	BY	CKD.	APPR.

PROGRAM MANAGEMENT UNIT, PUNJAB INTERMEDIATE CITIES IMPROVEMENT INVESTMENT PROGRAM (PICIIP), LOCAL GOVERNMENT AND COMMUNITY DEVELOPMENT (LG & CD) DEPARTMENT, PUNJAB)

CONSULTING SERVICES FOR ENGINEERING, PROCUREMENT AND CONSTRUCTION MANAGEMENT (EPCM) CONSULTANT.

COVERED PARKING SHEDS ALLAMA IQBAL TOWN, SIALKOT
TYPICAL CROSS SECTIONS

NESPAK

DESN. NESPAK	RECOMMENDED	VER./CKD.	APPROVED
DWN. ASHFAQ NAZ			
FILE			
CKD.			
SUBM.	DATE AUGUST, 2020	DRAWING NO. 3976/102/PC-1/XS04	REV. 00

NAZ D:\INTERMEDIATE CITIES\SIALKOT\ALLAMA IQBAL TOWN\X-SECTION\XS-04.dwg,1/7/2021

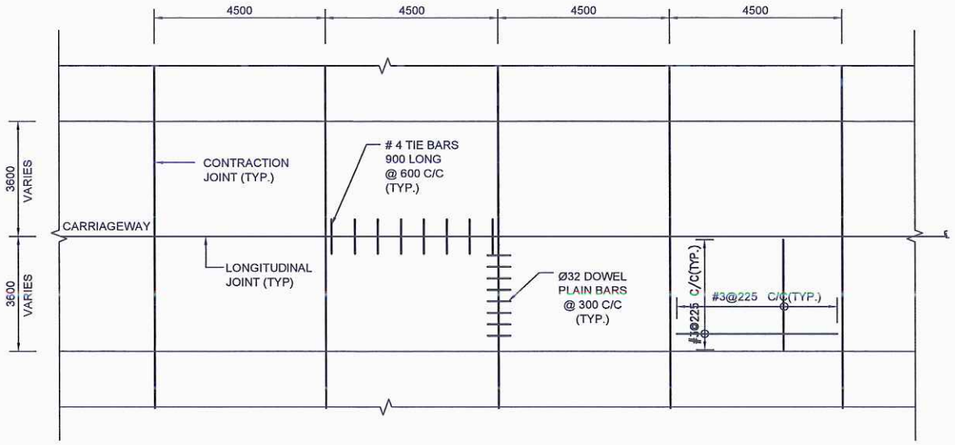

PLAN

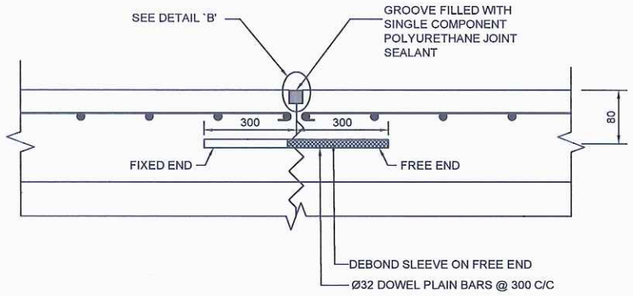

TYPICAL CONTRACTION JOINT

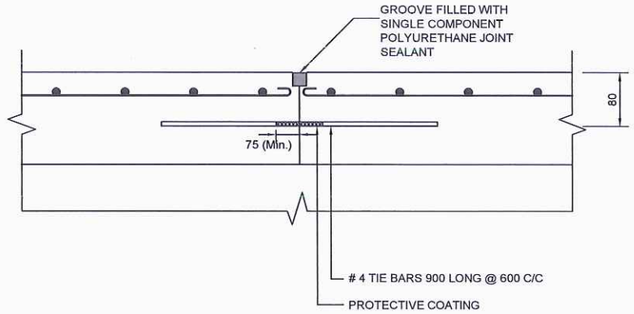

TYPICAL LONGITUDINAL JOINT

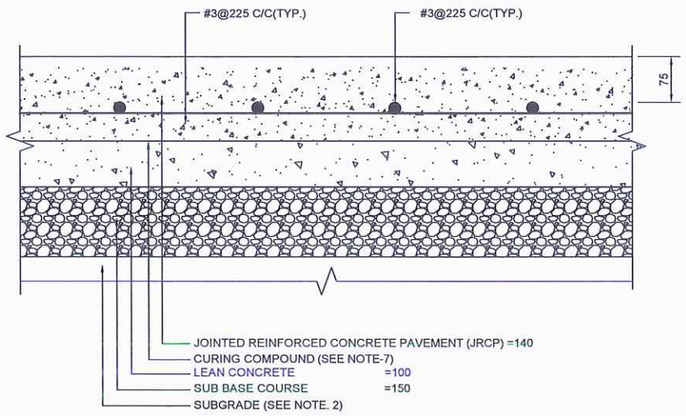

DETAIL `A'

NOTE:

1. ALL DIMENSIONS ARE IN MILLIMETERS UNLESS SPECIFIED OTHERWISE.
2. SUBGRADE SHALL HAVE A MINIMUM SOAKED CBR OF 7% AT 95% MDD.
3. RIGID PAVEMENT SHALL BE PAVED WITH CONCRETE PAVER UNLESS APPROVED OTHERWISE BY THE ENGINEER.
4. REINFORCEMENT STEEL SHALL BE GRADE 60.
5. CONCRETE COMPRESSIVE STRENGTH (CYLINDER) SHALL BE 4000 psi.
6. CURING COMPOUND SHALL CONSIST OF TWO COATS OF WHITE-PIGMENTED WAX-BASED COMPOUND (ASTMC309).
7. THE REINFORCED MESH SHALL BE KEPT IN PLACE TO CONTROL SURFACE CRACKING.THE MESH SHALL NOT BE SUNK IN CONCRETE.
8. FOR DETAILS REFER RELEVANT DRAWINGS.

REFERENCE DRAWINGS	REV NO.	DATE	DESCRIPTION	BY	CKD.	APPR.

PROGRAM MANAGEMENT UNIT, PUNJAB INTERMEDIATE CITIES IMPROVEMENT INVESTMENT PROGRAM (PICIIP), LOCAL GOVERNMENT AND COMMUNITY DEVELOPMENT (LG & CD) DEPARTMENT, PUNJAB)

CONSULTING SERVICES FOR ENGINEERING, PROCUREMENT AND CONSTRUCTION MANAGEMENT (EPCM) CONSULTANT.

COVERED PARKING SHEDS ALLAMA IQBAL TOWN, SIALKOT
TYPICAL JOINTED REINFORCED CONCRETE PAVEMENT DETAIL

NESPAK -

DESN. NESPAK	RECOMMENDED	VER./CKD.	APPROVED
DWN. ASHFAQ NAZ			
FILE	DATE	DRAWING NO.	REV.
CKD.			
SUBM.	AUGUST 2020	3976/102/PC-1/XS04A	00

NAZ D:\INTERMEDIATE CITIES\SIALKOT\ALLAMA IQBAL TOWN\X-SECTION\Rigid Pavement-2.dwg 29/01/2021

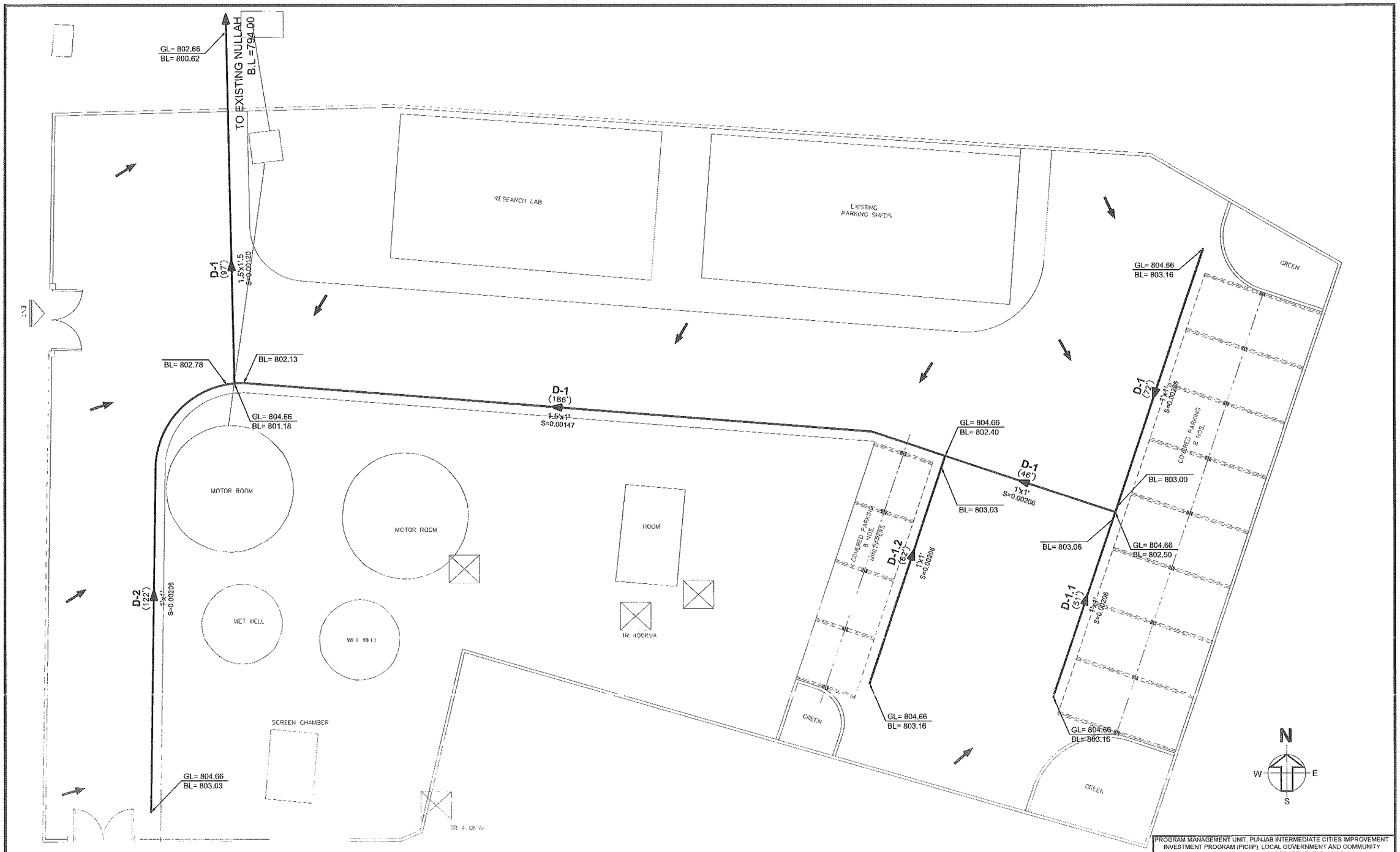

PROGRAM MANAGEMENT UNIT, PUNJAB INTERMEDIATE CITIES IMPROVEMENT INVESTMENT PROGRAM (PICIIP), LOCAL GOVERNMENT AND COMMUNITY DEVELOPMENT (LG & CD) DEPARTMENT, PUNJAB

CONSULTING SERVICES FOR ENGINEERING, PROCUREMENT AND CONSTRUCTION MANAGEMENT (EPCM) CONSULTANT.

COVERED PARKING SHEDS ALLAMA IQBAL TOWN, SIALKOT

STORM WATER DRAINAGE SYSTEM (LAYOUT PLAN AND LEVELS)

NESPAK

REFERENCE DRAWINGS	REV NO.	DATE	DESCRIPTION	BY	CKD.	APPR.	

DESN. NESPAK	RECOMMENDED	VER.&CKD.	APPROVED
DWN. Yasir Victor			
FILE	DATE	DRAWING NO.	REV.
CKD.	AUGUST 2020	3976/11/TD/3J02	0
SUBM.			

Supplementary Information
Regarding Works to Be Procured

The bidder shall be required to comply with relevant government regulations and guidelines on COVID-19 prevention and control issued by the Government of Pakistan (http://covid.gov.pk/guideline), or in the absence thereof, to international good practice guidelines, such as World Health Organization 2020, Considerations for public health and social measures in the workplace in the context of COVID-19, Geneva available here: https://www.who.int/publications-detail/considerations-for-public-health-andsocial-measures-in-the-workplace-in-the-context-of-covid-19.

The EMP / IEE for the project is attached.

Initial Environmental Examination (IEE) / Environmental Management Plan (EMP)

Attached as Annexure-C

Punjab Intermediate Cities Improvement Investment Program (PICIIP)

TA 8683 (PAK)

Initial Environmental Examination

Construction of Parking Sheds At Sahiwal & Sialkot

October 2021

Prepared by PMU - PICIIP for the Asian Development Bank (ADB)

This Initial Environmental Examination Report is a document of the borrower. The views expressed herein do not necessarily represent those of ADB's Board of Directors, Management, or staff, and may be preliminary in nature. Your attention is directed to the "terms of use" section of the ADB website.

In preparing any country program or strategy, financing any project, or by making any designation of or reference to a particular territory or geographic area in this document, the Asian Development Bank does not intend to make any judgements as to the legal or other status of any territory or area

CURRENCY EQUIVALENTS

As of 3rd October 2021 Currency Unit – Pak Rupees (Pak Rs.)
Pak Rs 1.00 = $ 0.0058 US$1.00 = Pak Rs. 172

CONVERSIONS

1 meter = 3.28 feet

1 hectare = 2.47 acre

Acronyms

ADB	Asian Development Bank
CIU	City Implementation Unit
CDIA	Cities Development Initiative for Asia
PICIIP	Punjab Intermediate Cities Improvement Investment Program
PMU	Project Management Unit
SPS	Safeguard Policy Statement
EA	Executing Agency
EIA	Environment Impact Assessment
EPA	Environmental Protection Agency
ESCF	Environment Screening and Categorization Form
EMP	Environmental Management Plan
IA	Implementing Agency
GoP	Government of Pakistan
IEE	Initial Environmental Examination
LAA	Land Acquisition Act (of 1984)
LARP	Land Acquisition and Resettlement Plan
Leq	Equivalent sound pressure level
NEQS	National Environmental Quality Standards
O&M	Operation & Maintenance
PC	Public consultation
PEPA	Punjab Environmental Protection Agency
PEPAct	Pakistan Environment Protection Act 1997
RP	Resettlement Plan
REA	Rapid Environmental Assessment
WATSAN	Water supply and Sanitation
WWTP	Wastewater treatment plant

Table of Content

1 Introduction 12
1.1 Overview 12
1.2 Purpose, Scope and Context of IEE Study 12
2 Policy and Legal Framework 19
3 Project Description 34
3.1 Project Description 34
3.2 Scope of Parking Sheds Work 34
3.3 Project Need 37
3.4 Project Design Parameters 37
3.5 Project Components 41
3.6 Project Construction Schedule 41
3.7 Construction Camps and Work Force 41
3.8 Machinery Requirement 42
3.9 Climate Risks from Project 43
4 Description of Environment 52
4.1 Physical Resources 52
4.1.1 Sahiwal City Geography 52
4.1.2 Natural and Climate Conditions of Sahiwal 53
4.1.3 Rainfall 54
4.1.4 Humidity 55
4.1.5 Temperature 56
4.1.6 Wind Direction 57
4.1.7 Ambient Air Quality 57
4.1.8 Noise Levels 57
4.1.9 Seismicity 62
4.1.10 Groundwater 63
4.2 Ecological Resources 64
4.2.1 Flora of the Area 64
4.2.2 Fauna of the Area 67
4.2.3 Protected areas / National Sanctuaries 69
4.3 Socio-Economic Development 69
4.3.1 Land Use and Settlements Pattern 70
4.3.2 Zone of Central Commercial Activities 71
4.3.3 Zone of Mixed Land 71
4.3.4 Zone of Industrial Complexes 72

4.3.5 Zone of Administrative and Educational Buildings 72
4.3.6 Zone of Planned Colonies 72
4.3.7 Agriculture and Livestock..... 73
4.3.8 Power 74
4.3.9 Industrial Activity 74
4.3.10 Water Supply Service 75
4.3.11 Sewerage System Service..... 76
4.3.12 Solid Waste Management..... 76
4.3.13 Transport..... 77
4.4 Social Resources 78
4.4.1 Employment and Unemployment..... 79
4.4.2 Educational Services 80
4.4.3 Health Facilities 80
4.4.4 Harappa Archaeological Site as a Tourist Attraction 80
4.5 Socioeconomic Condition 81
4.5.1 Settlements Profile 81
4.5.2 Conflict Resolution Mechanism 81
4.5.3 Public Health 81
4.5.4 Cultural and Religious Resources..... 82
4.5.5 Religion 82
4.5.6 Language Spoken 82
4.5.7 Castes and Minority Groups 82
4.5.8 Educational Status..... 82
4.5.9 Economic Conditions of the Study Area..... 83
4.6 Physical Resources 85
4.6.1 Sialkot City Geography..... 85
4.6.2 Natural and Climate Conditions of Sialkot..... 86
4.6.3 Rainfall 86
4.6.4 Humidity 87
4.6.5 Wind Speed and direction..... 87
4.6.6 Ambient Air Quality..... 88
4.6.7 Noise Levels..... 89
4.6.8 Seismicity 93
4.6.9 Surface Water 93
4.6.10 Groundwater..... 94
4.7 Ecological Resources 94
4.7.1 Flora of the Area..... 94

4.7.2 Fauna of the Area 96
4.7.3 Protected areas / National Sanctuaries 98
4.8 Socioeconomic Development 99
4.8.1 Agriculture 100
4.9 Archaeological and Cultural Heritage 106
5 Analysis of Alternatives 108
5.1 Overview 108
5.2 No Project Option 108
5.3 Structure Analysis 108
5.4 Site Selection for Parking Sheds 110
6 Potential Environmental Impacts and Mitigation Measures 111
6.1 Methodology for impact screening 111
6.2 Design/Pre-Construction Phase 112
6.2.1 Lack of integration of IEE/EMP requirements into Construction bid documents 114
6.2.2 Material Haul Routes 114
6.2.3 Contractor's Environmental Safeguards Capacity 114
6.2.5 Cultural Heritage & Religious Sites, Social Infrastructure 115
6.2.6 Land Acquisition and Resettlement Impacts 116
6.3 Construction Phase 116
Impact Screening Matrix 116
6.3.2 Community Health and Safety 120
6.3.4 Noise 129
6.3.5 Hazardous and Non-Hazardous Waste Management 132
6.4 Impacts Associated with Operation 136
6.4.1 Noise Generation due to Vehicular Movement 136
6.4.2 Waste water Generation from office toilets and vehicle washing 137
6.4.3 Sludge Generation 137
6.4.5 Improper disposal of waste generated from office and workshop 138
6.4.6 Disease Vector Generation and Transmission 139
7 Environmental Management Plan & Institutional Requirements 141
7.1 Introduction 141
7.2 Environmental Management Plan (EMP) 141
7.3 Objectives of EMP 141
7.4 Environmental Management/Monitoring and Reporting 142
7.5 Institutional Arrangements 142
7.5.1 Role of LG&CDD 143

7.5.2 Role of PMU 143
7.5.3 Role of Municipal Corporation (MC) 143
7.5.4 Role of City Implementation Unit (CIUs) 143
7.5.5 Role of the ADB 144
7.5.6 Role of Project Contractor 144
7.6 Monitoring Parameters 144
7.7 Environmental Training 145
7.7.1 Capacity Building and Training 145
7.8 Environmental Management Costs 169
8 Public Consultation and Information Disclosure 173
9 Grievance Redressal Mechanism 178
10 Conclusion and Recommendations 182

Annexures

Annexure A	**Photographs of public consultations**
Annexure B	**Environment Screening & Categorization Forms (ESCF)**
Annexure C	**Occupational Health and Safety Plan**
Annexure D	**Emergency Response Plan**
Annexure E	**Archaeological 'Chance Find' procedure**
Annexure F	**Dust Management Plan**
Annexure G	**Site Specific EMP (SSEMP) Guide & Template for Guidance to Contractor**
Annexure H	**Baseline Environmental Monitoring**

List of Figures

Figure 1.1:Project Location Map Sahiwal 15

Figure 1.2: Project Location Map (Mubarak Pura) Sialkot 16

Figure 1.3: Project Location Map (Allama Iqbal Town) Sialkot 17

Figure 1.4: Project Location Map (Both Sites) Sialkot 18

Figure 3.1: Sensitive Receptor Map of Parking Shed Farid Town, Sahiwal 46

Figure 3.2: Sensitive Receptor Map of Parking Mubarak Pura, Sialkot 47

Figure 3.3: Sensitive Receptor Map of Parking Shed Allama Iqbal Town, Sialkot.... 48

Figure 3.4: Layout Plan of Parking Shed Farid Town, Sahiwal 49

Figure 3.5: Layout Plan of Parking Shed Mubarak Pura, Sialkot..... 50

Figure 3.6: Layout Plan of Parking Shed Allama Iqbal Town, Sialkot..... 51

Figure 4.1: Location Map of Sahiwal 53

Figure 4.2: Average Rainfall in Sahiwal..... 54

Figure 4.3: Average Monthly Humidity in Sahiwal 55

Figure 4.4: Average Monthly Temperature in Sahiwal..... 56

Figure 4.5: Wind Rose for Sahiwal 57

Figure 4.6: Map of Monitoring Location Sahiwal 59

Figure 4.7: Seismic Zoning Map of Pakistan 63

Figure 4.5: Location of Sialkot..... 86

Figure 4.6: Average Monthly Rainfall in Sialkot District 87

Figure 4.7: Average Humidity Levels in Sialkot District 87

Figure 4.8: Average Wind Speed in Sialkot..... 88

Figure 4.9: Average Wind Direction 88

Figure 4.9: Map of Monitoring Location Sialkot 90

Figure 4.10: Seismic Zoning Map of Pakistan 93

List of Tables

Table 2.1: Environmental Guidelines and Regulations 20

Table 2.2: ADB Policy Principles 23

Table 2.3: IFC Work Environment Noise limits 27

Table 2.4: Comparison of International and local Air Quality Standards* 28

Table 2.5: Comparison of International and Local Noise Standards 30

Table 2.6: Environmental Quality Standards for Municipal & Liquid Industrial Effluents (mg/l - unless otherwise specified) 31

Table 3.17: Sensitive Receptor Mapping 44

Table 4.1: Meteorological Data, Mean Monthly Precipitation of Sahiwal district 55

Table 4.2: Mean Monthly Maximum and Minimum Temperature of Sahiwal district ... 56

Table 4.3: Comparison of Ambient Air Quality Results Versus Applicable Air Quality standards 60

Table 4.4: Ambient Noise Monitoring Results (24 hrs) in Project Area 61

Table 4.5: Meteorological Data, Mean Monthly Relative Humidity 62

Table 4.6: Water Quality Results 64

Table 4.6: Name of Trees 65

Table 4.7: Name of Shrubs and Herbs 66

Table 4.8: Name of Grasses 66

Table 4.9: Species Wise Tree Distribution 66

Table 4.10: Names of Mammals 67

Table 4.11: Names of Reptiles 68

Table 4.12: Names of Amphibians 68

Table 4.13: Names of Birds 68

Table 4.14: Land Use Distribution in Sahiwal 73

Table 4.15: Average Yield of Agricultural Crops 73

Table 4.16: Educational Level of the Respondents 82

Table 4.17: Distribution of Household Members by Occupation..... 83

Table 4.18: Distribution of Households by Average Monthly Household Income 84

Table 4.19: Housing Type 84

Table 4.20: Sialkot Climate Data 86

Table 4.21: Ambient Air Quality Monitoring Results (24 hrs) at Two Locations in Sialkot and Comparison with Standards[9] 91

Table 4.22: Ambient Noise Monitoring Results (24 hrs) at Two locations in Project Area..... 92

Table 4.24: Name of Trees..... 95

Table 4.25: Name of Shrubs and Herbs 95

Table 4.26: Name of Grasses 96

Table 4.27: Species Wise Tree Distribution 96

Table 4.28: Names of Mammals 97

Table 4.29: Names of Reptiles 97

Table 4.30: Names of Amphibians 98

Table 4.31: Names of Birds..... 98

Table 4.32: Average Yield of Agricultural Crops..... 100

Table 4.33: Land Use Distribution in Sialkot..... 102

Table 6.1: ‘Activity Wise’ Screening of possible Impacts during Design/Pre-Construction phase 113

Table 6.2: Screening of Possible Impacts during Construction Phase 116

Table 6.3: Control measures for Fugitive Dust emissions 118

Table 6.4: Construction Equipment Noise Ranges, dB(A)..... 130

Table 6.5: Screening of Possible Impacts during Operation Phase 136

Table 7.1: Environmental Management Plan 146

Table 7.2: ‘Pre-Construction’ Environmental Monitoring Plan for Baseline Development 161

Table 7.3: Construction Phase Monitoring Requirements 163

Table 7.4: ‘Operation Phase’ Environmental Monitoring Plan 166

Table 7.5: Capacity Development and Training Programme 167

Table 7.6: Cost Estimates for ‘Pre-Construction Phase’ Environmental Monitoring 169

Table 7.7: Cost Estimates for ‘Construction Phase’ Environmental Monitoring 170

Table 7.8: Annual Cost Estimates for ‘Operation Phase’ Environmental Monitoring 170

Table 7.9: Estimated Costs for EMP Implementation 171

Table 7.10: Capacity Development and Training Programme for Project Contractor(s) 172

EXECUTIVE SUMMARY

Project Overview

1. This is the Initial Environmental Examination report (IEE) for the Parking Sheds to be developed at Farid Town Sahiwal and at two sites Mubarak Pura, Capital road and Allama Iqbal Town Sialkot, Punjab province of Pakistan. A map of the project area is provided as **Figure ES-1**.

2. This document has been prepared as an update to the umbrella IEE assessment[1] prepared in July 2017, which covered all urban infrastructure works to be conducted in Sahiwal & Sialkot city. This document focuses solely on the proposed scope of works to be conducted for the development of one Parking Shed at Sahiwal and two Parking Sheds at Sialkot and contains the EMP, which shall be implemented by the Contractor to mitigate any potential impacts and shall be used by the PMU and ADB for compliance monitoring.

Project Need

3. At present, there is no proper and permanent parking place available for the large numbers of solid waste management machinery of Metropolitan Corporation (MC) Sahiwal and Sialkot Waste Management Company (SWMC) in both cities. Both cities are urgently in need of Parking Sheds facility as presently, solid waste management machinery is being parked on rental place or under the open sky. Absence of permanent parking places can cause machinery deterioration and compromise its safety that will lead to unsustainability of solid waste management system in both cities.

Project Scope

4. In Sialkot project involves establishment of Parking shed on total area of 12.76 kanals at Mubarak Pura for 64 nos. of vehicles and at Allama Iqbal Town on 9.8 kanals for 16 nos. of vehicles. Mubarak Pura site include construction of steel prefabricated sheds, 6’-0” high boundary wall, open service station, work shop, office building and installation of CCTV cameras while at Allam Iqbal Town steel prefabricated sheds, 02 nos. of gates, a security guard room and installation of CCTV cameras will be made.

5. In Sahiwal project involves establishment of Parking shed on total area of 18.27 kanals at Fareed Town for 42 nos. of vehicles that include construction of steel

[1] https://www.adb.org/projects/documents/pak-46526-007-iee-2

prefabricated sheds, 6'-0" high boundary wall, open service station, work shop, office building and installation of CCTV cameras.

Study Methodology

6. Primary and secondary data has been collected and used to assess the environmental impacts of the proposed Parking Sheds construction. Extensive due diligence visits were conducted to the project area for the proposed works from Dec'20 to Jan'20 to examine the project area and to assess the baseline in order to evaluate whether there are any key receptors that will need to be considered during the project works to prevent any long term and irreversible impacts.

7. Detailed baseline monitoring in the project area to assess potential impacts on air quality and noise levels has been conducted and presented in this study. This IEE report highlights all potential environmental impacts associated with the Parking Sheds project and recommends mitigation measures. Any environmental impacts associated with the project need to be properly mitigated, through the existing institutional arrangements described in Chapter No. 6 of this report.

8. The activities to be conducted under the project were screened for potential impacts at the design/pre-construction, construction and operation phases of the Parking Sheds. This 'activity wise' screening enabled to obtain a clear picture of the expected level of impacts resulting from the different activities and helped identify required mitigation measures to mitigate them to within acceptable limits as per local and international applicable regulations. A detailed environmental management and monitoring plan was developed to ensure compliance to the proposed measures during the project development.

9. The screening matrices for the key issues that have been identified during the different project development stages across the two Lots are provided in the **Tables ES-1 to ES-2** below.

Public Consultation Process

10. Detailed and extensive consultations with different key stakeholders have been conducted to date, consisting of the local communities and local businesses located in the both project areas, different public sector line departments etc. and their comments/concerns/suggestions were obtained. The details of the persons consulted are provided as **Annexure A**.

11. The key comments and concerns raised as a result of the consultations are as follows:

- Public safety should be on top priority during construction.
- The traffic should be managed properly during the construction.
- The Contractor should comply with the mitigation measures proposed in the Environmental and Management and Monitoring Plan (EMMP) and HSE compliance policy.
- Contractor's activities should be confined to minimize any inconvenience to the public.
- Dust produced due to construction activities may create different health problems, therefore water sprinkling should be carried out regularly to suppress the dust emissions;
- During construction, labour force movement should be controlled so that activities of the community are not disturbed;
- The participants/representatives also stressed the need for timely completion of the project.
- The movement of the heavy machinery should be controlled to avoid harm to other associated properties/structures;
- Grievance redressal mechanism (GRM) at the PMU level should be formalized to address any complaints from the stakeholders at site.

Analysis of Alternatives

12. A number of different alternatives were also assessed as follows:

- **'No Project' Option:** It was concluded considering the urgent need for the solid waste management machinery Parking Sheds for Sahiwal and Sialkot, the project must be developed and the 'No Project' option is not viable.

- **Site Selection Analysis**

13. A detailed site selection survey was conducted in both cities and sites are selected on basis of following factors

- No land acquisition is required, selected sites are government owned land
- Easy accessibility to whole city or service area for vehicles
- Less time required for solid waste management operation due to easy mobility

- **Structure Analysis**

14. Structural alternatives considered for the construction of Parking Sheds are as followed

    I. Concrete structure with conventional slab

II. Concrete structure with canopy slab

III. Steel structure with tube-sections

IV. Prefabricated steel structures with fiberglass roofing (butterfly type)

15. Concrete made structure and prefabricated steel structure. Concrete made structured is conventional construction practice while the prefabricated steel structure construction is quiet advanced method, based on the following economic, environmental and other factors prefabricated steel structure with fiberglass roofing are selected for the construction of Parking Sheds at all three sites.

Land Acquisition & Resettlement

16. The proposed project sites in both cities for the construction of Parking Sheds are owned by Municipal Corporations of respective cities and thus no land acquisition and/or resettlement will be required.

Conclusion & Recommendations

17. The implementation of the existing EMP in its true letter and spirit shall ensure any potential impacts are managed and no long-term significant impacts take place during the construction works at project sites.

18. During the operation phase of the Parking Sheds, mostly positive impacts are expected in order to effectively manage odor and waste water generated from machinery washing, implementation of the proposed mitigation measures and conducting the required monitoring will be carried regularly in the project areas.

19. As a result of this IEE study, it has been determined that any adverse or harmful impacts shall be effectively mitigated through implementation of necessary measures and through regular monitoring. The project falls under the Category 'B' of ADB's Guidelines and thus an IEE has been prepared for the proposed Parking Sheds project.

Table ES-1: 'Activity Wise' Screening of possible Impacts during Design/Pre-Construction phase

S/No.	Potential Impact	Likelihood (Certain, Likely, Unlikely, Rare)	Consequence (Catastrophic, Major, Moderate, Minor)	Risk Level (Significant, Medium, Low)	Residual Impact (Significant, Medium, Low)
1	Lack of integration of	Likely	Moderate	Medium	Low

	IEE/EMP requirements into Construction bid documents				
2	Material Haul Routes	Likely	Moderate	Medium	Low
3	Improper location of worker camps leading to improper disposal of solid waste and sewage and privacy issues for residents in project area.	Likely	Moderate	Medium	Low
4	Contractor's Environmental Safeguards Capacity	Likely	Moderate	Medium	Low
5	Cultural Heritage & Religious Sites, Social	Unlikely	Minor	Low	Low

Critical Risk Level
Significant Risk Level
Medium Risk Level
Low Risk Level

Table ES-2: Screening of Possible Impacts during Construction Phase

S/No.	Potential Impact	Likelihood (Certain, Likely, Unlikely, Rare)	Consequence (Catastrophic, Major, Moderate, Minor)	Risk Level (Significant, Medium, Low)	Residual Impact (Significant, Medium, Low)
1	Excavated Material (Earthworks) Disposal	Certain	Major	Significant	Low
2	Degradation of air quality due to	Certain	Major	Significant	Low

	construction works				
3	Potential accidents and injuries to communities in project area during construction works	Likely	Major	Medium	Low
4	Injuries to workers from lack of necessary training and/or not using PPEs etc.	Likely	Major	Medium	Low
5	High noise levels from construction activities	Likely	Major	Medium	Low
6	Improper handling and/or disposal of hazardous and non-hazardous waste	Likely	Moderate	Medium	Low
7	Untreated disposal of effluent from worker camps and batching plant(s)	Likely	Moderate	Medium	Low
9	Soil Contamination	Likely	Moderate	Medium	Low
10	Employment Conflicts	Likely	Moderate	Medium	Low
11	Communicable diseases	Likely	Moderate	Medium	Low
12	Vegetation and Wildlife Loss	Unlikely	Moderate	Low	Low
13	Historical/Archaeological Sites	Unlikely	Moderate	Low	Low

Critical Risk Level

Significant Risk Level

Medium Risk Level

Low Risk Level

Table ES-3: Screening of Possible Impacts during Operation Phase

S/No.	Potential Impact	Likelihood (Certain, Likely,	Consequence (Catastrophic, Major,	Risk Level (Significant, Medium,

		Unlikely, Rare)	Moderate, Minor)	Low)
1	Noise Generation due to Vehicular Movement	Likely	Minor	Low
2	Waste water generation from office toilets and vehicle washing	Likely	Minor	Low
3	Sludge generation	Likely	Minor	Low
4	Odor generation	Likely	Minor	Low
5	Improper disposal of waste generated from office and workshop	Unlikely	Minor	Low
6	Disease Vector Generation & Transmission	Likely	Minor	Low
7	Improvements in Public Health	Positive impacts expected		

Critical Risk Level

Significant Risk Level

Medium Risk Level

Low Risk Level

Positive Impacts

.

Figure ES-1: Project Location Map Sahiwal

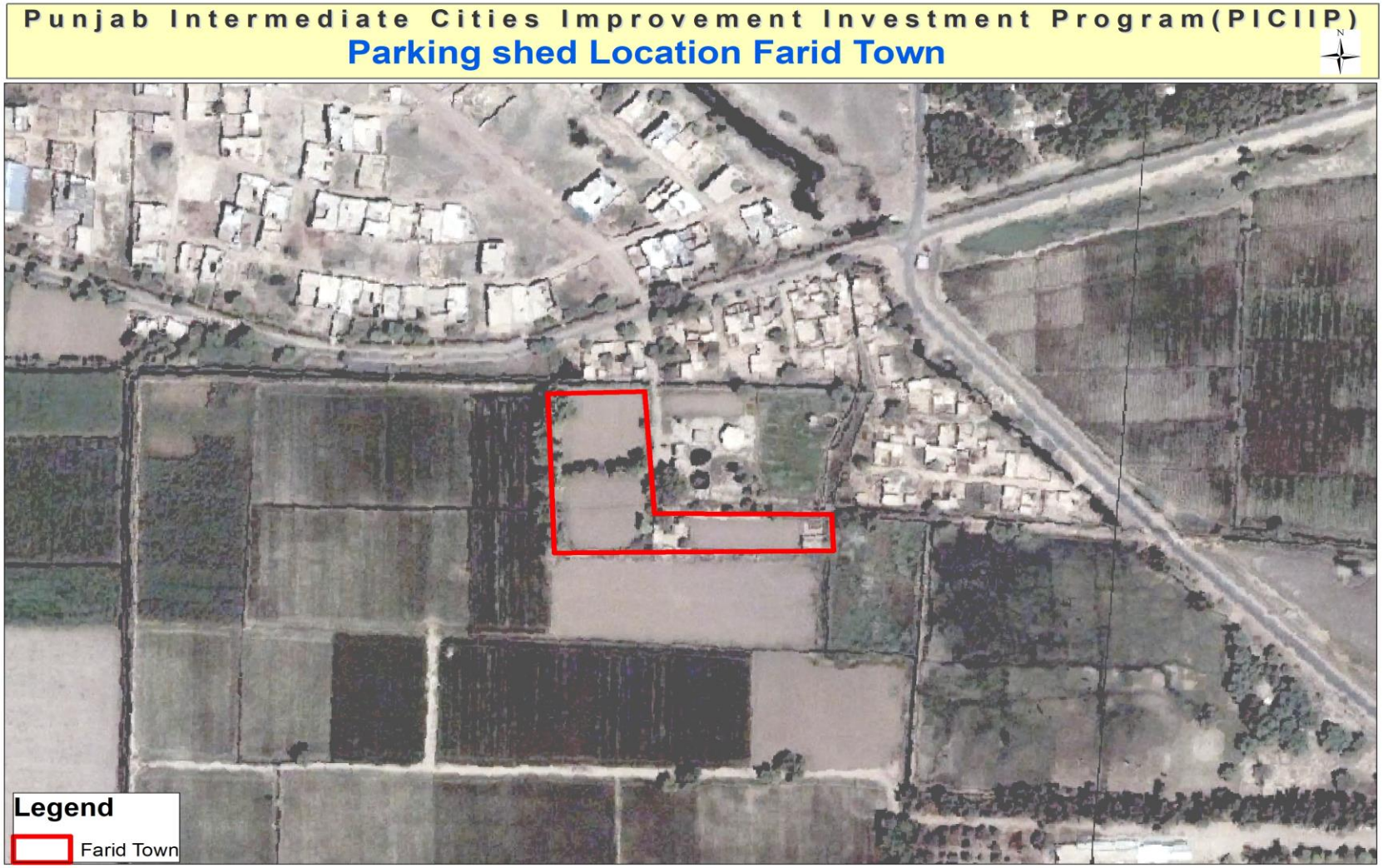

Figure ES-2: Project Location Map (Mubarak Pura) Sialkot

Figure ES-3: Project Location Map (Allama Iqbal) Sialkot

Figure ES-4: Project Location Map (Both Sites) Sialkot

1 Introduction

1.1 Overview

20. The Asian Development Bank (ADB) and the Cities Development Initiative for Asia (CDIA) are partnering with the Government of Punjab Province (GoPP), to undertake the Punjab Intermediate Cities Improvement Program (PICIIP).

21. The PICIIP aims to improve the quality of urban services available in selected cities in Punjab Province (city populations between 250,000 and 1,000,000). Urban infrastructure development is an important component of the PICIIP. The duration of the program will be six years. Funding will be accessed in phases. The PICIIP's overall budget is US$500 million, to be disbursed in phases.

22. The first phase will fund investments in the intermediate cities of Sialkot and Sahiwal. Major projects planned for Sahiwal city are water supply improvement; sewerage and drainage improvement, sewage treatment plant, green spaces development and transport routes improvement.

23. This IEE document focuses solely on the scope of works of the Construction of One Parking Shed in Sahiwal and two sheds in Sialkot and assesses any potentially significant impacts and proposes required mitigation measures, which shall be implemented by the Contractor and monitored by the PMU and ADB using the EMP.

1.2 Purpose, Scope and Context of IEE Study

24. The purpose for the establishment of the parking sheds is to provide permanent suitable place for the solid waste management machinery for protection from the solar radiation, ultraviolet rays, rain, hail, wind, and dust that is necessary for the long-life and effective working. These sheds will also serve as maintenance of these vehicles for respective cities. Therefore, to avoid any hinderance in solid waste management operations parking areas with covered shade structures will be constructed at the proposed sites of Farid Town Sahiwal, Allama Iqbal Town and Mubarak Pura, Capital Road, Sialkot. The scope of works to be conducted under this activity consist of following

Parking Shed Sahiwal

25. In Sahiwal, the proposed project involves establishment of a Parking shed on total area of 18.27 kanals at Farid Town for 42 nos. of vehicles, that include

- construction of steel prefabricated sheds
- 6'-0" high boundary wall
- open service station
- work shop
- office building
- installation of CCTV cameras

Parking Shed Sialkot

26. In Sialkot, establishment of Parking shed on total area of 12.76 kanals at Mubarak Pura for 64 nos. of vehicles and at Allama Iqbal Town on 9.8 kanals for 16 nos. of vehicles.

27. The Mubarak Pura site will require following works:

- construction of steel prefabricated sheds
- 6'-0" high boundary wall
- open service station
- work shop
- office building
- installation of CCTV cameras

28. At Allam Iqbal Town, the following activities will be performed:

- construction of steel prefabricated shed
- 02 nos. of gates
- security guard room
- installation of CCTV cameras

29. The proposed locations for conducting these works are shown in **Figures 1.1 to 1.4** below.

30. According to ADB's Safeguard Policy Statement (SPS) 2009, a Rapid Environmental Assessment (REA) Checklist was prepared for the proposed project works. The Pakistan Environmental Protection Agency's "Guidelines for the Preparation and Review of Environmental Reports (2000)" were also consulted.

Based on the limited scope of the works, this sub-project has been classified as Category ‘B’.

Figure 1.1:Project Location Map Sahiwal

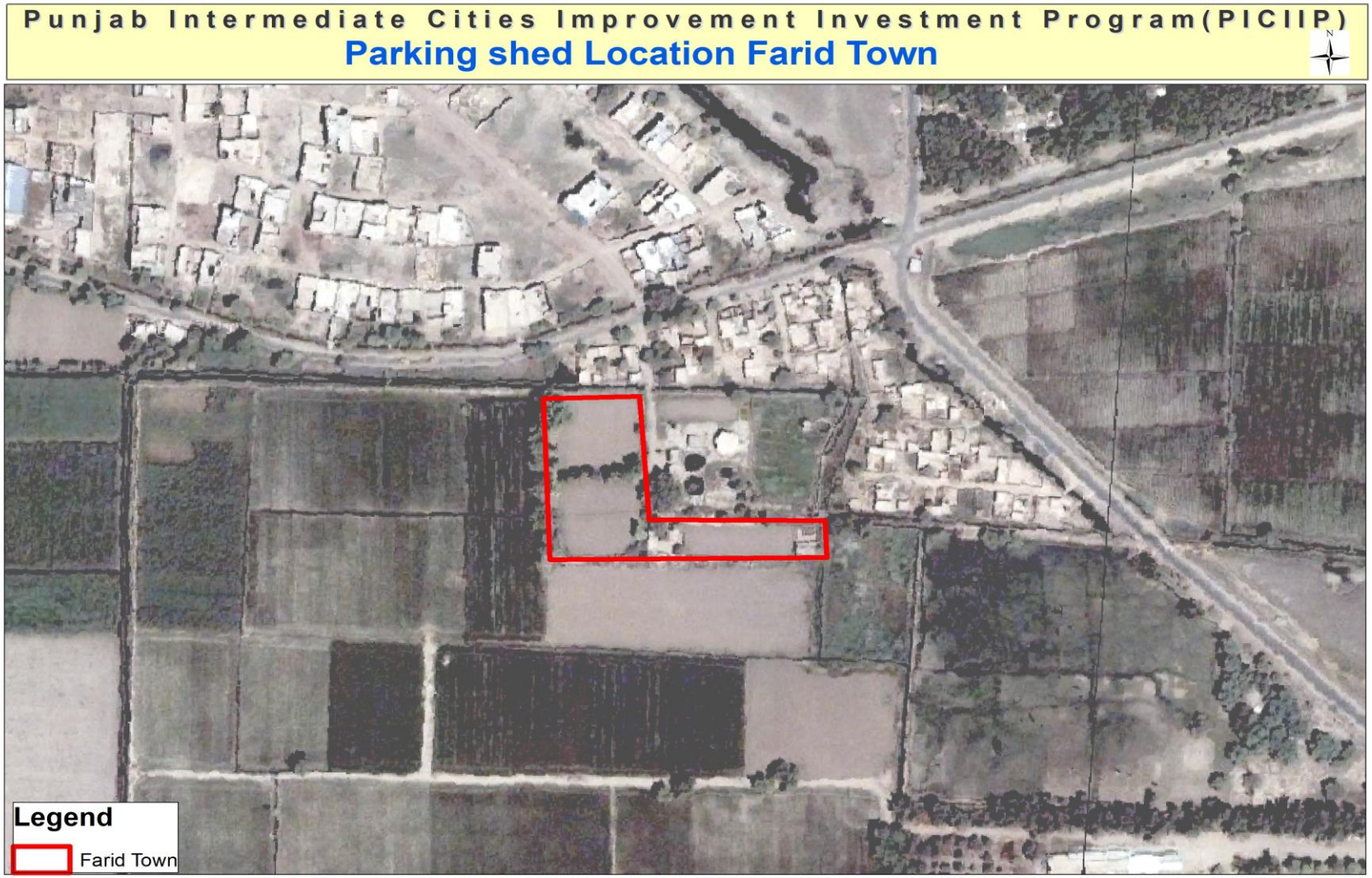

Figure 1.2: Project Location Map (Mubarak Pura) Sialkot

Figure 1.3: Project Location Map (Allama Iqbal Town) Sialkot

Figure 1.4: Project Location Map (Both Sites) Sialkot

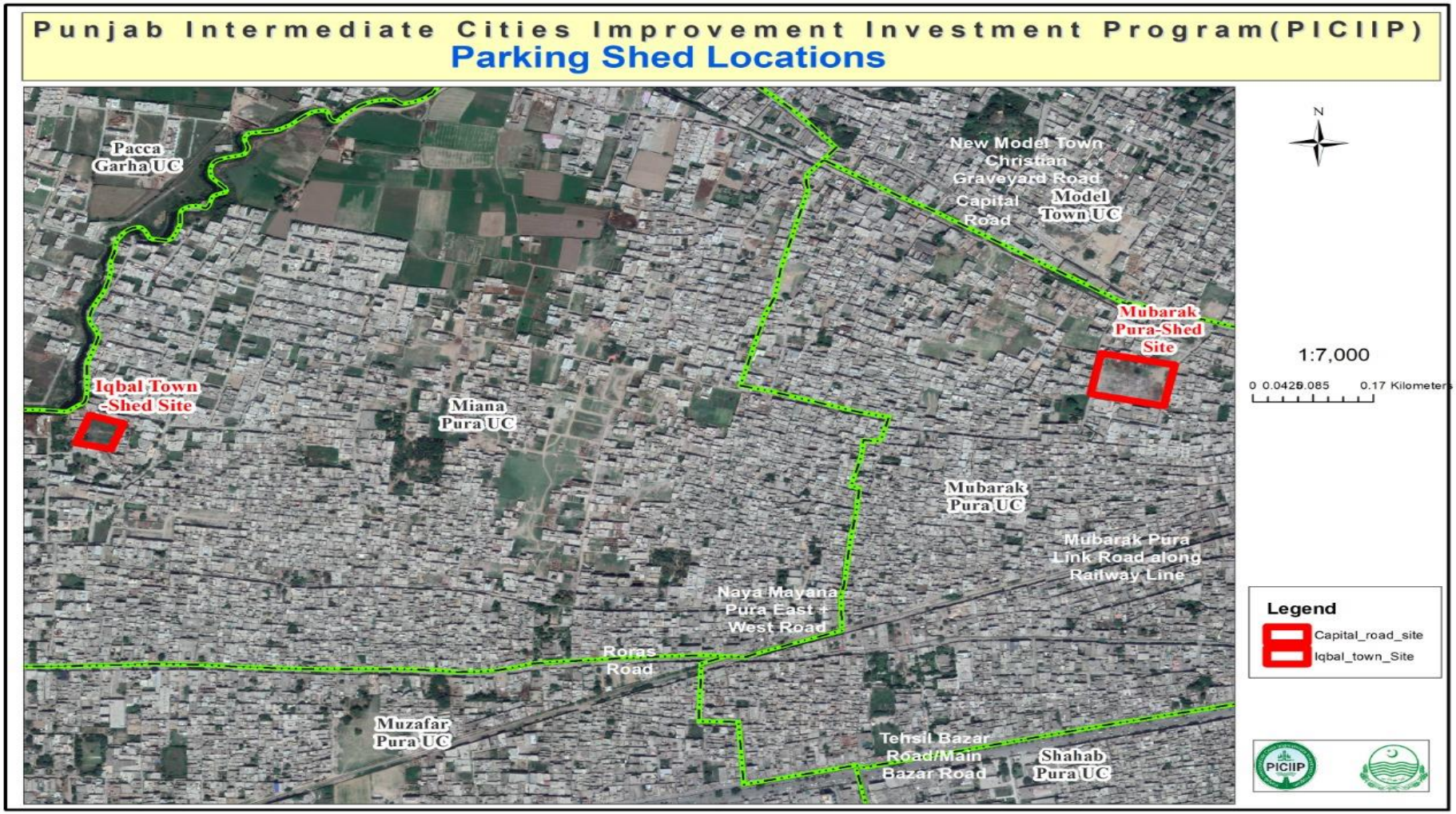

2 Policy and Legal Framework

2.1 General

31. This section provides an overview of the policy framework and national legislation that applies to the proposed Parking Sheds project in Sahiwal and Sialkot. The project will comply with all national legislation relating to the environment in Pakistan, and will obtain all the regulatory clearances required from the financing agency, ADB.

2.2 National Policy and Legal Framework

32. The Pakistan National Conservation Strategy (NCS) that was approved by the federal cabinet in March 1992 is the principal policy document on environmental issues in the country (EUAD/IUCN, 1992). The NCS outlines the country's primary approach towards encouraging sustainable development, conserving natural resources, and improving efficiency in the use and management of resources. The NCS has 68 specific programs in 14 core areas in which policy intervention is considered crucial for the preservation of Pakistan's natural and physical environment. The core areas that are relevant in the context of the proposed PARKING SHEDS development are pollution prevention and abatement and increasing energy efficiency while conserving biodiversity.

33. Prior to the adoption of the 18th Constitutional Amendment, the Pakistan Environmental Protection Act (PEPA) 1997 was the governing law for environmental conservation in the country. Under PEPA 1997, the Pakistan Environmental Protection Council (PEPC) and Pak EPA were primarily responsible for administering PEPA 1997. Post the adoption of the 18th Constitutional Amendment in 2011, the subject of environment was devolved and the provinces have been empowered for environmental protection and conservation.

2.3 Regulations for Environmental Assessment, Pakistan EPA

34. Under Section 12 (and subsequent amendment) of the PEPA (1997), a project falling under any category specified in Schedule I of the IEE/EIA Regulations (SRO 339 (I0/2000), requires the proponent of the project to file an IEE with the concerned provincial EPA. Projects falling under any category specified in Schedule II require the proponent to file an EIA with the provincial agency, which is responsible for its review and accordance of approval or request any additional information deemed necessary.

2.4 Guidelines for Environmental Assessment, Pakistan EPA

35. The Pak-EPA has published a set of environmental guidelines for conducting environmental assessments and the environmental management of different types of development projects. The guidelines that are relevant to the proposed sub-project are listed below:

- Guidelines for the Preparation and Review of Environmental Reports, Pakistan, EPA1997;
- Guidelines for Public Consultations; Pakistan EPA May 1997;

2.5 National Environmental Quality Standards (NEQS) 2000

36. The National Environmental Quality Standards (NEQS), 2000, specify the following standards:

- Maximum allowable concentration of pollutants (32 parameters) in municipal and liquid industrial effluents discharged to inland waters, sewage treatment facilities, and the sea (three separate sets of numbers);
- Maximum allowable concentration of pollutants (16 parameters) in gaseous emissions from industrial sources;
- Maximum allowable concentration of pollutants (two parameters) in gaseous emissions from vehicle exhaust and noise emission from vehicles;
- Maximum allowable noise levels from vehicles;

37. These standards apply to the gaseous emissions and liquid effluents discharged by construction machinery.

2.6 Other Environment Related Legislations

38. The national laws and regulations are provided in **Table 2.1** below.

Table 2.1: Environmental Guidelines and Regulations

Legislation/Guideline	Description
National Environmental Policy (2005) (NEP)	NEP is the primary policy of Government of Pakistan addressing environmental issues. The broad Goal of NEP is, “to protect, conserve and restore Pakistan’s environment in order to improve the quality of life of the citizens through sustainable development”. The NEP identifies a set of sectoral and cross-sectoral guidelines to achieve its goal of sustainable development. It also suggests various policy instruments to overcome the environmental problems throughout the country.
The Forest Act (1927)	The Act empowers the provincial forest departments to declare any forest area as reserved or protected. It empowers the provincial forest departments to prohibit the clearing of forest for cultivation,

Legislation/Guideline	Description
	grazing, hunting, removing forest produce, quarrying and felling, lopping and topping of trees, branches in reserved and protected forests. No protected forest is situated in the project area for the PARKING SHEDS works.
Punjab Wildlife Protection Ordinance, 1972	It empowers the government to declare certain areas reserved for the protection of wildlife and control activities within in these areas. It also provides protection to endangered species of wildlife. As no activities are planned in these areas, no provision of this law is applicable to the proposed PARKING SHEDS works.
The Antiquities Act (1975)	It ensures the protection of Pakistan's cultural resources. The Act defines "antiquities" as ancient products of human activity, historical sites, or sites of anthropological or cultural interest, national monuments, etc. The Act is designed to protect these antiquities from destruction, theft, negligence, unlawful excavation, trade, and export. The law prohibits new construction in the proximity of a protected antiquity and empowers the GOP to prohibit excavation in any area that may contain articles of archaeological significance. Under the Act, the subproject proponents are obligated to ensure that no activity is undertaken in the proximity of a protected antiquity, report to the Department of Archaeology, GOP, any archaeological discovery made during the course of the project.
Pakistan Penal Code (1860)	It authorizes fines, imprisonment or both for voluntary corruption or fouling of public springs or reservoirs so as to make them less fit for ordinary use.
NATIONAL ENVIRONMENTAL AND CONSERVATION STRATEGIES	
National Conservation Strategy	Before the approval of NEP, the National Conservation Strategy (NCS) was considered as the Government's primary policy document on national environmental issues. At the moment, this strategy just exists as a national conservation program. The NCS identifies 14 core areas including conservation of biodiversity, pollution prevention and abatement, soil and water conservation and preservation of cultural heritage and recommends immediate attention to these core areas.
Biodiversity Action Plan	The plan recognizes IEE/EIA as an effective tool for identifying and assessing the effects of a proposed operation on biodiversity.
INTERNATIONAL CONVENTIONS	
The Convention on Conservation of Migratory Species of Wild Animals (1981.21)	The Convention requires countries to take action to avoid endangering migratory species. The term "migratory species" refers to the species of wild animals, a significant proportion of whose members cyclically and predictably cross one or more national jurisdictional boundaries. The parties are also required to promote or cooperate with other countries in matters of research on migratory species. There are no endangered species of plant life or animal life in the vicinity of the proposed project areas for the PARKING SHEDS works.
Convention on International Trade in Endangered Species of Wild Fauna and Flora (1973)	The convention requires Pakistan to impose strict regulation (including penalization, confiscation of the specimen) regarding trade of all species threatened with extinction or that may become so, in order not to endanger their survival further.
International Union for Conservation of Nature	Lists wildlife species experiencing various levels of threats internationally. Some of the species indicated in the IUCN red list are

Legislation/Guideline	Description
and Natural Resources Red List (2000)	also present in the wetlands of Pakistan.

2.7 ADB's Safeguard Policy Statement (SPS), 2009

39. The ADB's SPS 2009 requires that environmental considerations be incorporated into ADB funded projects to ensure that the project will have minimal environmental impacts and be environmentally sound. Occupational health & safety of the local population should also be addressed as well as the project workers as stated in SPS. A Grievance Redress Mechanism (GRM) to receive application and facilitate resolution of affected peoples' concerns, complaints, and grievances about the project's environmental performance is also established.

40. All loans and investments are subject to categorization to determine environmental assessment requirements. Categorization is to be undertaken using Rapid Environmental Assessment (REA) checklists, consisting of questions relating to (i) the sensitivity and vulnerability of environmental resources in project area, and (ii) the potential for the project to cause significant adverse environmental impacts. Projects are classified into one of the following environmental categories:

41. **Category A:** A proposed project is classified as category A if it is likely to have significant adverse environmental impacts that are irreversible, diverse or unprecedented. These impacts may affect an area larger than the sites or facilities subject to physical works. An environmental impact assessment (EIA) is required.

42. **Category B:** A proposed project is classified as category B if its potential adverse environmental impacts are less adverse than those of category A projects. These impacts are site-specific, few if any of them are irreversible, and in most cases mitigation measures can be designed more readily than for category A projects. An initial environmental examination (IEE) is required.

43. **Category C:** A proposed project is classified as category C if it is likely to have minimal or no adverse environmental impacts. No environmental assessment is required although environmental implications need to be reviewed.

44. **Category FI:** A proposed project is classified as category FI if it involves investment of ADB funds to or through a financial intermediary (FI).

2.8 ADB's Access to Information Policy (AIP) 2018

45. ADB's new Access to Information Policy (AIP), reflects the ADB's ongoing commitment to transparency, accountability, and participation by stakeholders. The

policy contains principles and exceptions to information sharing with external stakeholders, led by a new overarching principle of "clear, timely, and appropriate disclosure."

2.9 ADB's Accountability Mechanism Policy 2012

46. The objectives of the Accountability Mechanism is providing an independent and effective forum for people adversely affected by ADB-assisted projects to voice their concerns and seek solutions to their problems, and to request compliance review of the alleged noncompliance by ADB with its operational policies and procedures that may have caused, or is likely to cause, them direct and material harm. The Accountability Mechanism is a "last resort" mechanism.

2.10 Implications of ADB's safeguard policies on proposed project

47. The objectives of ADB's safeguards are to:

- avoid adverse impacts of projects on the environment and affected people, where possible;
- minimize, mitigate, and/or compensate for adverse project impacts on the environment and affected people when avoidance is not possible; and
- help borrowers/clients to strengthen their safeguard systems.

48. ADB's SPS sets out the policy objectives, scope and triggers, and principles for three key safeguard areas:

- environmental safeguards,
- involuntary resettlement safeguards, and
- Indigenous Peoples safeguards.

49. The objective of the environmental safeguards is to ensure the environmental soundness and sustainability of projects and to support the integration of environmental considerations into the project decision-making process. ADB's policy principles are summarized in **Table 2.2** below.

Table 2.2: ADB Policy Principles

	Policy principle	Summary
1	Screening and categorization	Screening process initiated early to determine the appropriate extent and type of environmental assessment.

2	Environmental assessment	Conduct an environmental assessment to identify potential impacts and risks in the context of the project's area of influence.
3	Alternatives	Examine alternatives to the project's location, design, technology, and components and their potential environmental and social impacts, including no project alternative.
4	Impact mitigation	Avoid, and where avoidance is not possible, minimize, mitigate, and/or offset adverse impacts and enhance positive impacts. Prepare an environmental management plan (EMP).
5	Public consultations	Carry out meaningful consultation with affected people and facilitate their informed participation. Involve stakeholders early in the project preparation process and ensure that their views and concerns are made known to and understood by decision makers and taken into account. Continue consultations with stakeholders throughout project implementation. Establish a grievance redress mechanism.
6	Disclosure of environmental assessment	Disclose a draft environmental assessment in a timely manner, in an accessible place and in a form and language(s) understandable to stakeholders. Disclose the final environmental assessment to stakeholders.
7	Environmental management plan	Implement the EMP and monitor its effectiveness. Document monitoring results, and disclose monitoring reports.
8	Biodiversity	Do not implement project activities in areas of critical habitats.
9	Pollution prevention	Apply pollution prevention and control technologies and practices consistent with international good practices. Adopt cleaner production processes and good energy efficiency practices. Avoid pollution, or, when avoidance is not possible, minimize or control the intensity or load of pollutant emissions and discharges. Avoid the use of hazardous materials subject to international bans or phaseouts.
10	Occupational health and	Provide workers with safe and healthy working conditions and prevent accidents, injuries, and

	safety Community safety.	disease. Establish preventive and emergency preparedness and response measures to avoid, and where avoidance is not possible, to minimize, adverse impacts and risks to the health and safety of local communities
11	Physical cultural resources	Conserve physical cultural resources and avoid destroying or damaging them. Provide for the use of "chance find" procedures.

2.11 IFC Sector Specific Guidelines on Construction

50. 'Environmental issues during the construction infrastructure related projects involving significant earth moving and civil works and their prevention and control recommendations are presented in the General EHS Guidelines. These impacts include, among others, construction site waste generation; soil erosion and sediment control from materials sourcing areas and site preparation activities; fugitive dust and other emissions (e.g. from vehicle traffic, land clearing and movement, and materials stockpiles); noise from heavy equipment and truck traffic; and potential hazardous materials and oil spills associated with heavy equipment operation and fuelling activities.''

51. World Bank Environmental Health and Safety (EHS) Standards-ADB advocates adherence to environmental standards set out in the World Bank Group Environmental, Health and Safety Guidelines (EHS Guidelines) of which the following are most applicable to construction project:

- air emissions related to vehicular traffic
- ambient air quality
- surface water quality
- ambient noise levels.

52. ADB's SPS requires that the most stringent standards be applied (within reasonable practicality). The PEQS are listed beside WHO/IFC standards. The most stringent standards will be applied to the construction projects and are highlighted in green in each table. Noise level guidelines for noise levels measured outdoors are given in **Table 2.5**. Noise impacts should not exceed the levels highlighted in green in **Table 2.5** or result in a maximum increase in background levels of 3dB at the nearest sensitive receptor as defined in IFC' OHS guidelines.

53. Air quality guidelines issued by the IFC and based on WHO standards (Table 2.4) apply, in this case to emissions from traffic on the roads and its growth over time. Beyond traffic, air pollutants are also emitted through construction work and decommissioning of the construction stage, and the operating life of the new rail line. In the case of this project, sources of pollution to air mobile sources, namely motor vehicles. Guideline standards for for specific air pollutants **(Table 2.4)** were derived from World Health Organization (WHO) and PEQS guidelines.

54. Construction and operating period air quality in the project corridor should not exceed the levels highlighted in green in **Table 2.4.**

- To conclude, the standards to be applied will be those highlighted in green. Any mitigation measures will be related to the increase due to construction or to increased traffic due to the road improvements.

2.12 Comparison of International and Local Environmental Legislations

55. The ADB SPS requires application of pollution prevention and control technologies and practices consistent with international good practice, as reflected in internationally recognized standards. The SPS states that when host country regulations differ from these standards, the EA will achieve whichever is more stringent.

56. In order to select the most stringent standards applicable, a mix of local (NEQS) and international (IFC) regulations have been selected. The IFC Environmental, Health, and Safety (EHS) Guidelines, General EHS Guidelines: Environmental, Noise Management has noise level guidelines for daytime and nighttime, which are applicable. It shall be ensured that all necessary noise mitigation measures are implemented to minimize the noise levels in the project area.

57. The **Table 2.3** presents IFC workplace noise standards that are applicable to the construction workers. It should also be noted that IFC EHS guidelines advise that where existing ambient noise levels already exceed thresholds, the project should not result in an increase of more than 3 dB over existing ambient noise at the nearest receptor location off-site.

58. A comparison of applicable local and international guidelines for ambient air quality has been provided in **Table 2.4** below. In the case of most pollutants, the NEQS standards for ambient air quality are more stringent in comparison to USEPA and WHO/IFC standards. The applicable and most stringent parameters for each respective pollutant are highlighted in green.

59. Similar to the standards for air quality, the comparison of noise standards provided in **Table 2.5** clearly shows that NEQS standards for noise are more stringent in comparison to the IFC standards. The only exception is the daytime noise level standard for Industrial areas where the IFC standard is more stringent (70 dB(A)) in comparison to NEQS (75 dB(A)) and so for this particular parameter, the IFC standard will be used. Apart from this one exception, the NEQS standards have been used for the proposed Parking Sheds development project.

60. As far as regulations regarding other environmental parameters are concerned such as acceptable effluent disposal parameters, the local regulations i.e. NEQS take precedence over any other international regulations such as IFC.

Table 2.3: IFC Work Environment Noise limits

Type of Work, workplace	IFC General EHS Guidelines
Heavy Industry (no demand for oral communication)	85 Equivalent level L_{eq},8h
Light industry (decreasing demand for oral communication)	50-65 Equivalent level L_{eq},8h

Table 2.4: Comparison of International and local Air Quality Standards*

Pollutants	USEPA		WHO/IFC		Pak. NEQS	
	Avg. Time	Standard	Avg. Time	Standard	Avg. Time	Standard
SO_2	3 hrs 1 hr	0.5 ppm 75 ppb	24 hr 10 min	20 ug/m^3 500 ug/m^3	Annual Mean 24 hrs	80 ug/m^3 120 ug/m^3
CO	8 hrs 1 hr	9 ppm (11 mg/m^3) 35 ppm (43 mg/m^3)	-	-	8 hrs 1 hr	5 mg/m^3 10 mg/m^3
NO_2	Annual Mean 1 hr	100 ug/m^3 (53 ppb) 100 ppb	1 yr 1 hr	40 ug/m^3 200 ug/m^3	Annual Mean 24 hrs	40 ug/m^3 80 ug/m^3
O_3	8 hrs	0.07ppm (148 ug/m^3)	8 hrs	100 ug/m^3	1 hr	130 ug/m^3
TSP	-	-	-	-	Annual Mean 24 hrs	360 ug/m^3 500 ug/m^3
PM_{10}	24 hrs	150 ug/m^3	1 yr	20 ug/m^3	Annual Mean	120 ug/m^3

			24 hr	50 ug/m^3	24 hrs	150 ug/m^3
$PM_{2.5}$	Annual Mean 24 hrs	15 ug/m^3 35 ug/m^3	1 yr 24 hr	10 ug/m^3 25 ug/m^3	Annual Average 24 hrs 1 hr	15 ug/m^3 35 ug/m^3 15 ug/m^3

*: The standards highlighted in green for each respective pollutant are the most stringent based on a comparison between local and international regulations and thus shall be applicable for the proposed project.

* In instances where the airshed is significantly degraded and the pollutant levels are already exceeding the ambient pollutant concentrations provided in the table above, it shall be ensured that the project activities cause as small an increase in pollution levels as feasible, and amounts to a fraction of the applicable short term and annual average air quality guidelines or standards as established in the project specific environmental assessment.

Table 2.5: Comparison of International and Local Noise Standards

Category of Area/Zone	Limit in dB(A) Leq			
	NEQS		WHO/IFC	
	Day Time 06:00 – 22:00	Night Time 22:00-06:00	Day Time 07:00 – 22:00	Night Time 22:00-07:00
Residential area (A)	55	45	55	45
Commercial area (B)	65	55	70	70
Industrial area (C)	75	65	70	70
Silence zone (D)	50	45	55	45

*: The standards highlighted in green for each respective Area/Zone are the most stringent based on a comparison between local and international regulations and thus shall be applicable for the proposed project.

* In instances where baseline noise levels are already exceeding the standards above, it will need to be ensured that the project activities do not cause an increment of more than 3 dB(A) from the baseline noise levels.

Table 2.6: Environmental Quality Standards for Municipal & Liquid Industrial Effluents (mg/l - unless otherwise specified)[2]

S/No.	Parameter	PEQS Standards (Wastewater discharge Into Inland Waters)	FAO Guidelines for Threshold Levels of Trace Elements for Agriculture Use[3]	EU Council Directive, 91/271/EEC, Urban Wastewater Discharge directive[4]
1	Temperature or Temperature Increase	≤3°C	-	-
2	pH Value	6-9	-	-
3	BOD at 20°C	80	-	25
4	COD	150	-	125
5	TSS	200	-	35
6	TDS	3500	-	-
7	Grease and Oil	10	-	-
8	Phenolic compounds (as phenol)	0.1	-	-
9	Chloride	1000	-	-
10	Fluoride	10	1.0	-
11	Cyanide	1.0	-	-

[2] https://epd.punjab.gov.pk/system/files/Punjab%20Environmental%20Quality%20Standards%20for%20Muncipal%20And%20Liquid%20Industrial%20Effluents%20final_0.pdf

[3] http://www.fao.org/3/T0551E/t0551e04.htm

[4] https://www.adb.org/sites/default/files/project-document/60815/42408-033-aze-iee-05.pdf

12	An-ionic detergents	20	-	-
13	Sulfate	600	-	-
14	Sulfide	1.0	-	-
15	Ammonia	40	-	-
16	Pesticides	0.15	-	-
17	Cadmium	0.1	0.01	-
18	Chromium (trivalent and hexavalent)	1.0	0.1	-
19	Copper	1.0	0.2	-
20	Lead	0.5	5.0	-
21	Mercury	0.01	-	-
22	Selenium	0.5	0.02	-
23	Nickel	1.0	0.2	-
24	Silver	1.0	-	-
25	Total Toxic Metals	2.0	-	-
26	Zinc	5.0	2.0	-
27	Arsenic	1.0	0.1	-
28	Barium	1.5	-	-
29	Iron	8.0	5.0	-

30	Manganese	1.5	0.2	-
31	Boron	6.0	-	-
32	Chlorine	1.0	-	-

1

3 Project Description

3.1 Project Description

61. The specific information on the proposed construction of Parking Sheds in Sahiwal and Sialkot are provided below.

62. The sensitive receptor map for the proposed Parking Sheds is provided as **Figure 3.1 to Figure 3.3** below and the list of sensitive receptors and their respective distances from the project site is provided as **Table 3.17** below.

- The proposed Parking Shed site at Shaiwal situated in urban area and consist of 18.27 kanals at Farid Town, Medical College Road, Shaiwal. This site have total 42 numbers of vehicular parking capacity including garbage compactor, mini tippers, dump truck, arm roll truck, vacuum sweeper and road washers
- The proposed Parking Shed sites in Sialkot are also in the middle of urban area and consist of 12.76 kanals at Mubarak Pura and 9.8 kanals at Allama Iqbal Town, Sialkot. Mubarak Pura site is situated on Capital Road and Allama Iqbal Town site is linked with the Defence Road, Sialkot
- Mubarak Pura and Allma Iqbal Town site have parking capacity of 64 numbers of vehicles and 16 numbers of vehicles respectively including the garbage compactor, mini tippers, dump truck, arm roll truck, vacuum sweeper and road washers
- All three sites are existed in main areas of their cities and have an easy access for vehicular movement to whole respective cities.

3.2 Scope of Parking Sheds Work

63. The general step wise sequences of activities to be conducted under each of the three sites are described below. It shall be ensured that staging of activities takes place to manage any potential impacts, including traffic management issues.

64. The proposed sites for the construction of Parking Sheds and other miscellaneous facilities are located at above mentioned areas and the land for all three sites are owned by the Metropolitan Corporation, Sahiwal and Municipal Corporation, Sialkot in their respective cities. Layout maps of the proposed sheds are shown in **Figure 3.4 to Figure 3.6.**

65. The proposed construction works will consist of the following steps:

♣ **Step 1: Site preparation or leveling:**

The site will need to be cleaned and leveled before further processes. Cleaning will involve the removal of shrubs or any waste from the site and then filling with clay or sand to raise the ground level.

♣ **Step 2: Excavation and PCC:**

Excavation is the digging of trenches in the ground for making it ready for the foundation substructure of the building. After excavating the ground, a layer of PCC (Plain cement concrete) will be laid in the dug portion before placing the reinforcements for the foundation.

♣ **Step 3: Foundation:**

Foundation is the lowermost part of the building that is in contact with the soil. It transfers the load on the building from the superstructure to the soil and needs to be strong to handle the load. The reinforcement for the foundation will then be prepared after excavation and concreting is done. The level of base of foundations will be checked before pouring the concrete. The earth filing will be done in the excavated portions after the concrete foundations stabilize.

♣ **Step 4: Filling and formation of Floor:**

After foundation is complete, Backfilling of select fill material will take place for preparation of floor.

♣ **Step 5: Installation of Prefabricated Steel Structure:**

After the floor work is complete, prefabricated steel structure including steel columns, rafter, roof purlins will be installed.

♣ **Step 6: Construction of Parking Sheds Pedestal:**

Construction of parking sheds pedestal includes steps like excavation, laying of reinforced cement concrete and fabrication of mild steel.

♣ **Step 7: Plinth beam and slab:**

Once the foundation is built, the ground beam reinforcements will be prepared and then concreting will be done. Later masonry will be done above the ground beam and concreting of plinth beam will be done above it. The void between the foundation and

plinth level will be filled with compacted soil.

♣ **Step 8: Superstructure – Column:**

After the plinth slab is cured, the main structure for the building is started. The columns are brought up and the frame for further construction is prepared.

♣ **Step 9: Masonry:**

The walls are later prepared with different materials such as bricks, concrete blocks, fly ash bricks etc. according to the prepared drawings. Masonry work is carried out with cement mortar. Cement mortar is a mixture of cement and sand. Then the gaps are laid for doors and windows during the masonry work.

♣ **Step 10: Lintel over door window gaps:**

Lintels are prepared with reinforcement and concreting to support the masonry work over the doors and windows.

♣ **Step 11: Roof structure:**

The masonry work is completed. Then, the slab is prepared with the beams resting on the concrete columns. The reinforcements for beams and slabs are assembled and then in a single day, the concrete is poured. Later, curing is done.

♣ **Step 12: Door window framing and fixations:**

Once the covering is prepared with walls and structure, the door and window frames are installed. Later, the doors and window panels are fixed without finishing.

♣ **Step 13: Brick Wall:**

After the foundation work is complete, the brick wall be constructed.

♣ **Step 14: Installation of CCTV:**

After the brick wall is complete, CCTV Cameras will be installed at selected locations on the wall.

♣ **Step 15: Plumbing Works:**

Installation of plumbing items including pipe fittings for water supply, valves, geysers and for drainage works; PVC drainage pipes.

♣ **Step 16: Electrification:**

This step involves laying, installation, testing of power cable, lights and fans, poles and accessories, distribution boards and installation of transformer.

♣ **Step 17: Exterior finishing:**

The exterior plastering and painting is also started once the superstructure is ready. Waterproofing is also done to prevent weather effect. Cladding can also be done to enhance the elevation of the house.

♣ **Step 18: Internal finishing:**

The walls are plastered and the flooring is leveled and tiling is done. Later on, the walls will painted and tiled.

3.3 Project Need

66. At present, there is no proper and permanent parking place available for the large numbers of solid waste management machinery of Metropolitan Corporation (MC) Sahiwal and Sialkot Waste Management Company (SWMC) in both cities. Both cities are urgently in need of a Parking Sheds facility as presently, solid waste management machinery is being parked on rental place or under the open sky. Absence of permanent parking place would result in machinery deterioration due to solar radiation, ultraviolet rays, rain, hail, wind, dust and can compromise its safety that will lead to unsustainability of solid waste management system in both cities.

3.4 Project Design Parameters

Electrical Design

67. Electric power supply shall be required for provision of electrical services for the covered sheds of Sialkot & Sahiwal. The power supply at 11kV level and distribution at 415/240V shall be used for the Indoor/ Outdoor electrification. Following are the broad parameters/design basis to be adopted to develop the power distribution infrastructure up to the project site & within the premises /areas.

Power Supply Arrangement

68. The power supply arrangement is segregated in following two main components

i. Medium Voltage (MV) Level

69. The 11kV supply shall be used to energize/step down 11/0.415 kV Distribution transformers for sheds and the rating of transformers shall be worked out such as to supply the power to the project indoor/outdoor lighting. The loading of the transformers shall not be more than 80% of their rated value.

ii. ii) Low Voltage (LV) Level

70. Power supply at LV level shall be at 415 Volts level for a 3 phase, 5 wire (R for Red, Y for Yellow ,B for Blue, N for Neutral & E for CPC/ECC) system and 240 V for 1 Phase 3 wires (P for Phase, N for Neutral & E for CPC/ECC) system. Source of the 415V system shall be the LV side of the distribution transformers. The main applications for power supply at this voltage level shall be:

- Lighting and small power
- Building supply
- Indoor / Outdoor lighting.

71. Single/multi core copper cables shall be used for Main and Sub Main Distribution Panels/ Lighting control panel. Single core green/yellow cable shall be used for circuit protective conductor or earth continuity conductor as per proposed power distribution scheme.

Surveillance System Design

72. The scope of work for Extra Low Voltage (ELV) Systems for proposed parking sheds shall include the tender level design and supervision of IP Based Video Surveillance System.

73. An extensive video surveillance system capable of monitoring, analyzing, managing and recording key areas shall be deployed. The Video surveillance system will comprise of IP cameras, power supplies and video recording equipment. The Video surveillance system shall be installed at each entry and exit gate, at each corner of the boundary wall and in the mid of the single length of the boundary wall enabling these locations to be monitored from the Control station located in the Superintendent room. The system will help identify, monitor and control any unusual or unlawful activity. Video archives for required number of days will be maintained in the control center to facilitate post facto analyses of any untoward incident.

74. The Video surveillance system shall comprise minimum of the following:

- Video cameras monitoring at entry exits and boundary walls

- Network video recording system capable of storing video bit streams generated by each camera for the required no. of days/years.
- Analytics and Unlawful /Unusual Activity Detection
- Detection of Unauthorized Intruders / area

Highways & Transportation Design

75. The Geometric design parameters are given below:

Parking Sheds at Freed Town – Sahiwal

(Road & Parking Area) = 45,780 Sft

Parking Sheds at Capital Road – Sialkot

(Road & Parking Area) = 58,840 Sft

Parking Sheds at Allama Iqbal Town – Sialkot

(Road & Parking Area) = 27,742 Sft

Pavement Structure

Rigid Pavement Thickness ROW 60 METERS

RCC Slab (4000Psi)	=	390 mm
Lean Concrete	=	100 mm
Sub base	=	200 mm

Rigid Pavement Thickness ROW 40 METERS

RCC Slab (4000Psi)	=	370 mm
Lean Concrete	=	100 mm
Sub base	=	200 mm

Rigid Pavement Thickness ROW 25 METERS

RCC Slab (4000Psi)	=	340 mm
Lean Concrete	=	100 mm
Sub base	=	200 mm

Mechanical & Plumbing Design

76. For proper management and control it is proposed that independent system shall be provided for office building. The scope of work for plumbing system design shall cover the following services;

- Potable cold and hot tap water supply
- Plumbing, sanitary drainage & venting and Rainwater drainage

Methodology for Plumbing Works

77. Plumbing design for water supply and sanitation shall be carried out in accordance with National Plumbing code Hand Book or local applicable plumbing codes.

Potable Tap Water Supply

78. The plumbing system for water supply will be designed keeping in view the desired pressure in the plumbing system as per codes, generally the following criteria for pressures in the system is adopted given as below:

Minimum Pressure	=	8 psi
Maximum Pressure	=	30 psi

Plumbing Sanitary Drainage and Venting And Rainwater Drainage

79. Main features will include the following:

- Design and drawings of sewerage system including soil and waste pipe system including Manholes, Gully Gratings chambers, grease traps, floor traps and cleanouts.
- Separate wastewater collection from bathrooms.
- Wastewater collection for food area.
- Sewer pipe size according to guidelines of Plumbing codes.
- Rain water from roofs will be disposed of through vertical pipes and gutters down to ground level from where it will join main drainage system.

- Minimum self-cleansing velocity = 0.75 m/sec.

Plumbing Codes

80. Plumbing installation and repair work on residences and other buildings generally must be done according to plumbing and building codes to protect the users of the building and to ensure safe, quality construction.

Design method = National Plumbing Code USA or relevant applicable codes.

3.5 Project Components

81. Major component of Parking Sheds are prefabricated steel sheds that will be manufactured in steel industry then will be transported and assembled on sites. On site construction activity will involve RCC column foundation for sheds as well as establishment of other allied facilities including office building, workshop, washing area, boundary wall, installation of CCTV camera systems and entry gate.

3.6 Project Construction Schedule

82. The project construction phase is expected to last for a total of 6 months with the activity expected to commence in the second quarter of 2021 and completed by last quarter of 2021.

3.7 Construction Camps and Work Force

83. The construction activity has to span over approximately six months. There shall be a number of contracts for a variety of works. The selected Contractor shall have the option to select suitable site(s) located near the project sites to establish his labor camps. If private land is selected, the contractor shall enter into contract with the private owner. Before establishing, the site of contractor facility is to be approved by Environment Specialist of SC considering Environmental safeguards requirements.

84. Essential for the work bases is easy approach, availability of a suitable place for temporary storage of material and availability of water for construction in the vicinity. Presence of shade from trees close to the work bases can add to the comfort of the labor while taking rest during the hot season.

85. The location of storage materials and camps will be critical. Since the project contractor(s) will be responsible for identifying the suitable locations for storage and labor camps from the private sector, thus there will need to be clear guidelines for this process, which will need to be closely monitored by the implementing agency. As

far as possible, the project design team shall be assigned the task to identify the suitable location(s) for storage of materials since inappropriate storage of materials may result disruption of the traffic movement.

86. Workforce involved in project will be as followed

Farid Town, Sahiwal	
Masons	2
Labour	6
Welder	2
Helper	4
Denter	2
Mubarak Pura & Allama Iqbal Town, Sialkot	
Masons	4
Labour	8
Welder	2
Helper	4
Denter	4

3.8 Machinery Requirement

87. For storing materials, stocking equipment and parking machinery and vehicles, the Contractor shall require open and accessible sites close to the labor camps. The Contractor, at his own expense, but keeping in view his contractual obligations to honor the applicable national and international guidelines regarding level of pollution, shall make the arrangements. The following machinery will be utilized during construction work

Machinery	**Quantity**
Farid Town, Sahiwal	
Excavator	1
Dump truck	1
Crane	1
Welding unit	2
Water Bowser	1
Concrete Mixer	1
Compactor	1

Mubarak Pura & Allama Iqbal Town, Sialkot	
Excavator	1
Dump truck	1
Crane	1
Welding unit	2
Water Bowser	1
Concrete Mixer	2
Compactor	1

3.9 Climate Risks from Project

88. The excavation of construction material, vehicles, camps and vehicles movement is likely to generate dust and exhaust emissions such as Carbon Monoxide (CO), Carbon Dioxide (CO2), Sulphur Oxides and Nitrogen Oxides. During these activities, local air quality may decline as a result of gaseous and particulate emissions from vehicle movements on and off site. Movement of the machinery and soil excavation will release particulate matter and fugitive dust which will deteriorate ambient air quality in the project site vicinity. The construction work is not likely to impact the climate of the area; however, it is likely to cause GHG emissions from above mentioned sources.

Table 3.1: Sensitive Receptor Mapping

Distance of Sensitive Receptors from Parking Shed Sites			
Sr. No	**Type of Sensitive Receptor**	**Name**	**Distance from Site**
Site No 1: Farid Town, Sahiwal			
1	Religious	Quran Mahal	300 m
2	Religious	Masjid Ghos e Azem	148 m
3	Religious	Masjid Al Huda	298 m
4	Religious	Shrine of Billian wali Sarkar	273 m
5	Religious	Central Church	290 m
6	Religious	New Apostolic Church	260 m
7	Educational	Super Ideal School	297 m
8	Educational	Govt. College for Women	194 m
9	Educational	Divisional Public School	300 m

10	Educational	Sahiwal Medical Colloege	298 m
11	Grave Yard	Farid Town Qabarstan	285 m
12	Grave Yard	Christan Grave Yard	270 m
Site No 2: Mubarak Pura, Sialkot			
1	Religious	Masjid Gulshan e Iqbal	296 m
2	Educational	Govt. Elementary School	10 M
3	Public Building	Child Protection & Welfare Bureau	11 m
Site No 3: Allama Iqbal Town, Sialkot			
1	Religious	Jamia Masjid Dar Ul Islam	242 m
2	Educational	Learning Zone School Campus	30 M
3	Public Building	Public Health & Engineering Department	2 M

Figure 3.1: Sensitive Receptor Map of Parking Shed Farid Town, Sahiwal

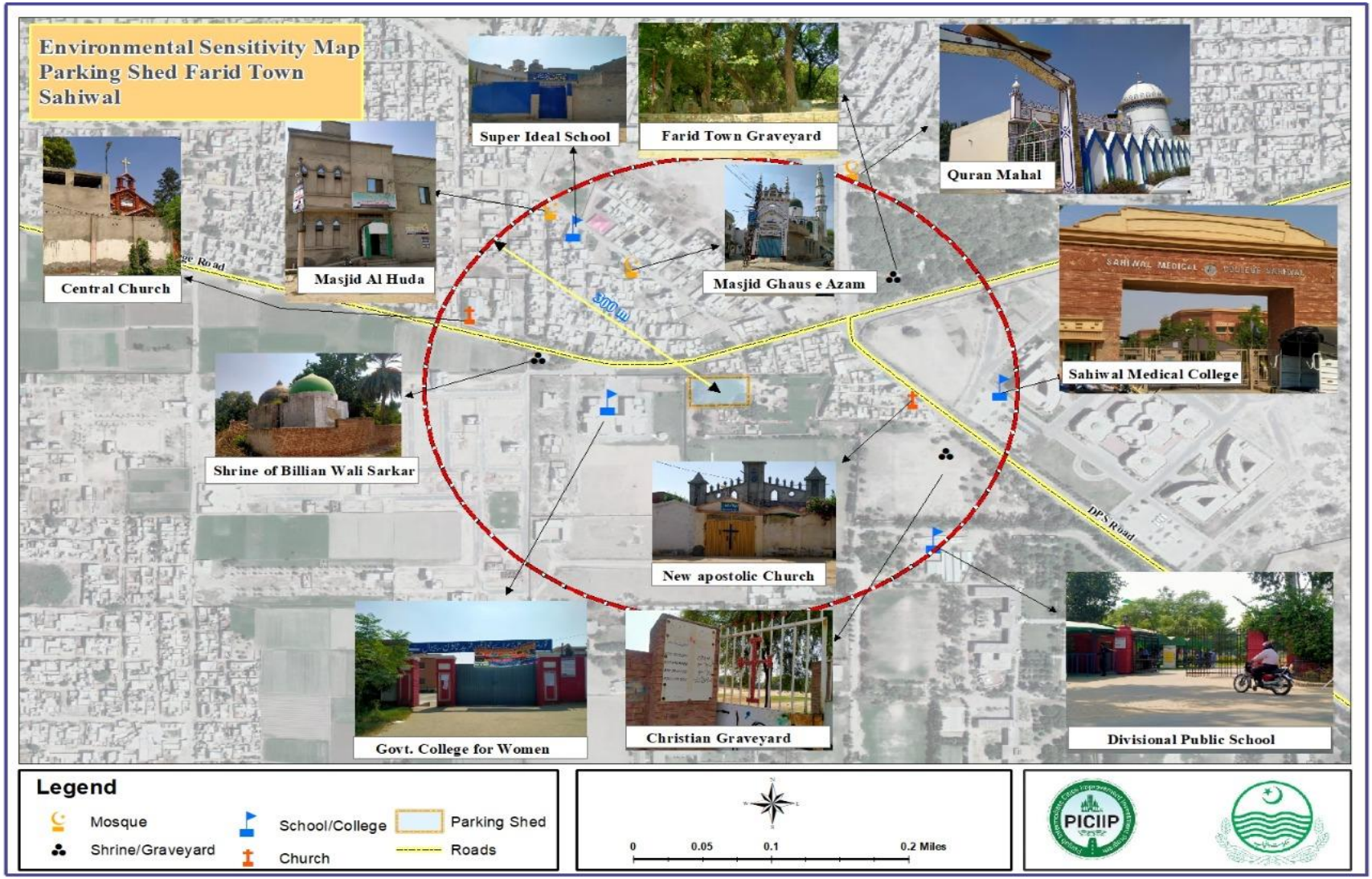

Figure 3.2: Sensitive Receptor Map of Parking Mubarak Pura, Sialkot

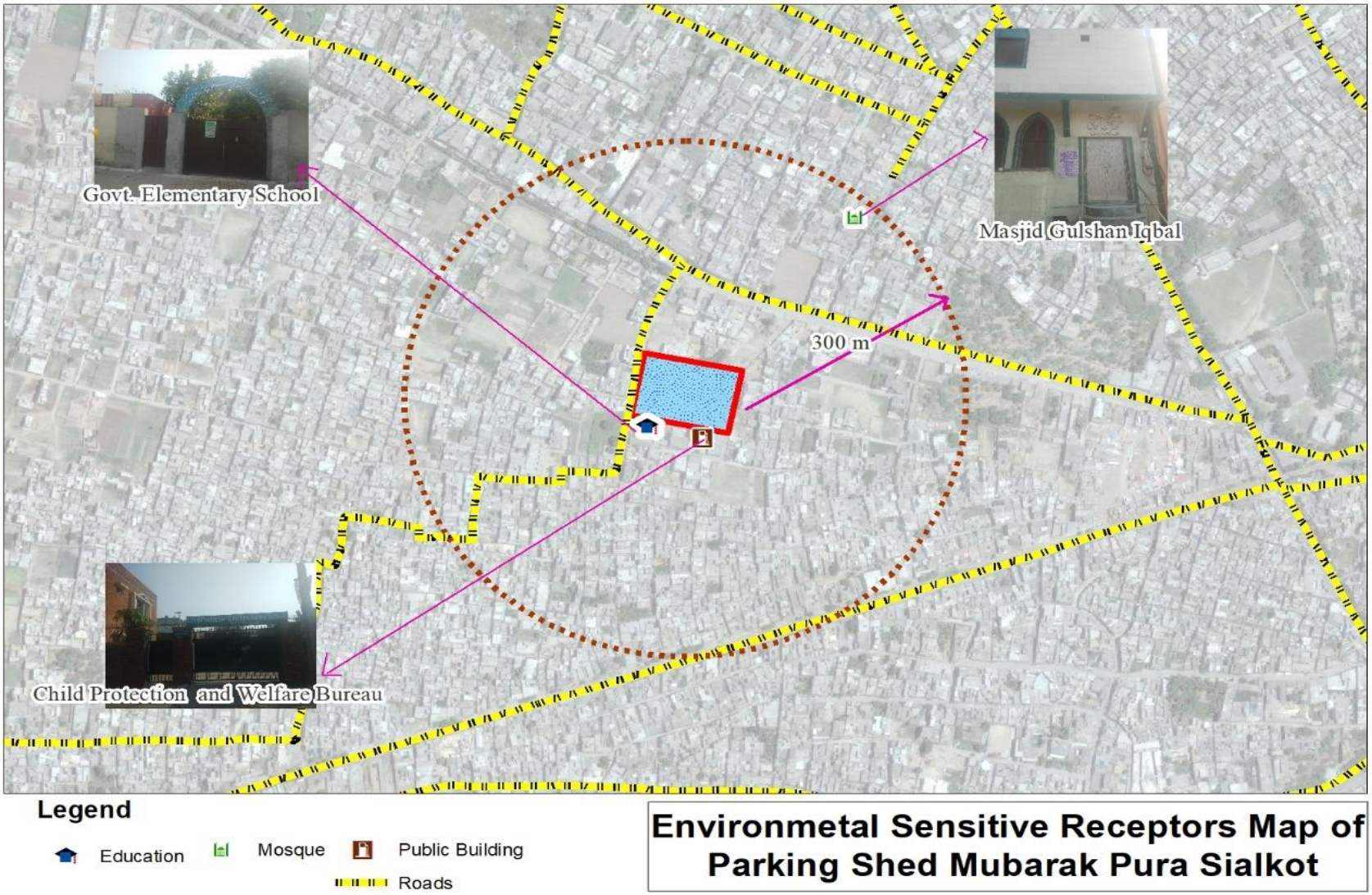

Figure 3.3: Sensitive Receptor Map of Parking Shed Allama Iqbal Town, Sialkot

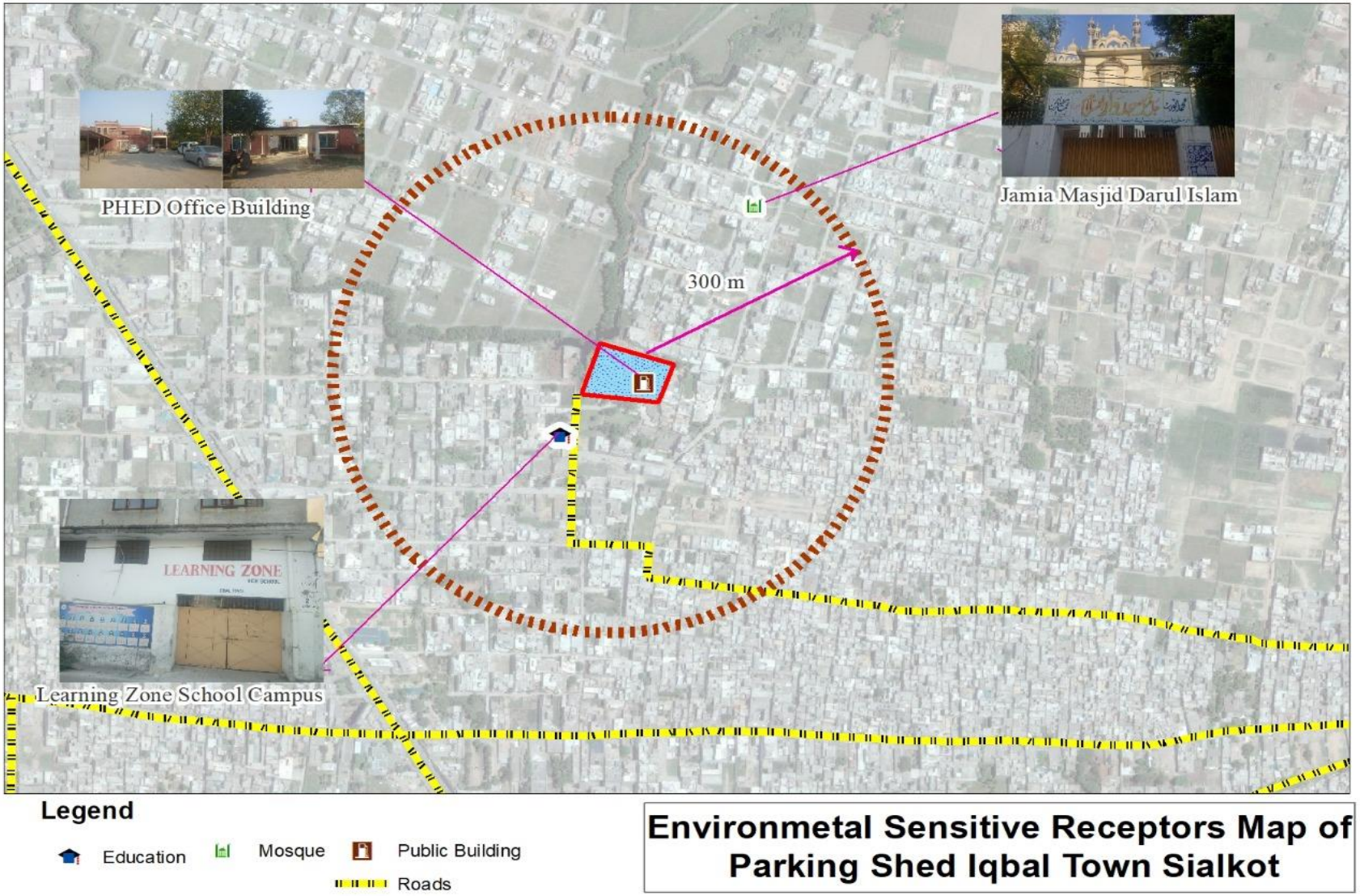

Figure 3.4: Layout Plan of Parking Shed Farid Town, Sahiwal

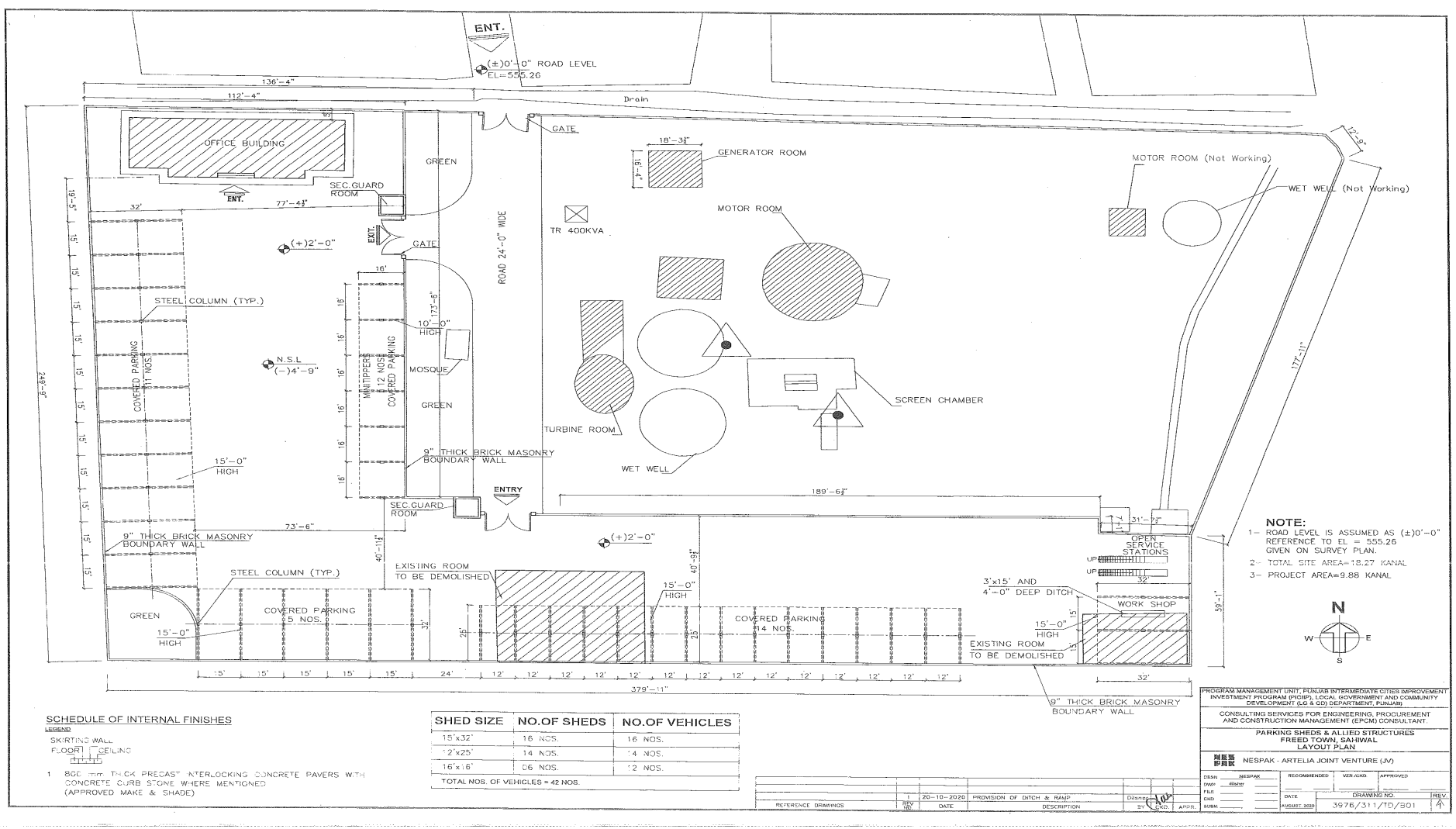

Figure 3.5: Layout Plan of Parking Shed Mubarak Pura, Sialkot

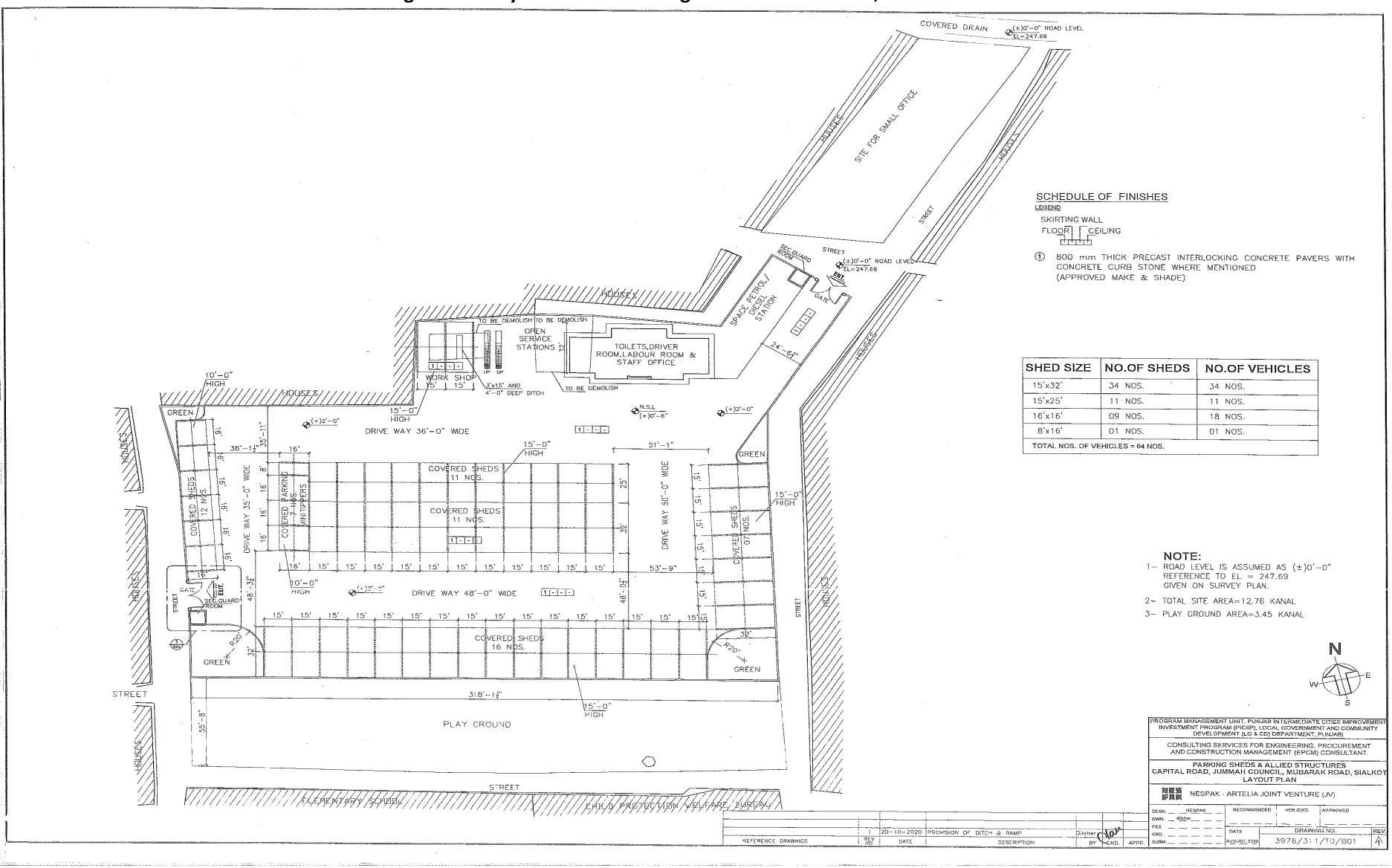

SHED SIZE	NO.OF SHEDS	NO.OF VEHICLES
15'x32'	34 NOS.	34 NOS.
15'x25'	11 NOS.	11 NOS.
16'x16'	09 NOS.	18 NOS.
8'x16'	01 NOS.	01 NOS.
TOTAL NOS. OF VEHICLES = 64 NOS.		

Figure 3.6: Layout Plan of Parking Shed Allama Iqbal Town, Sialkot

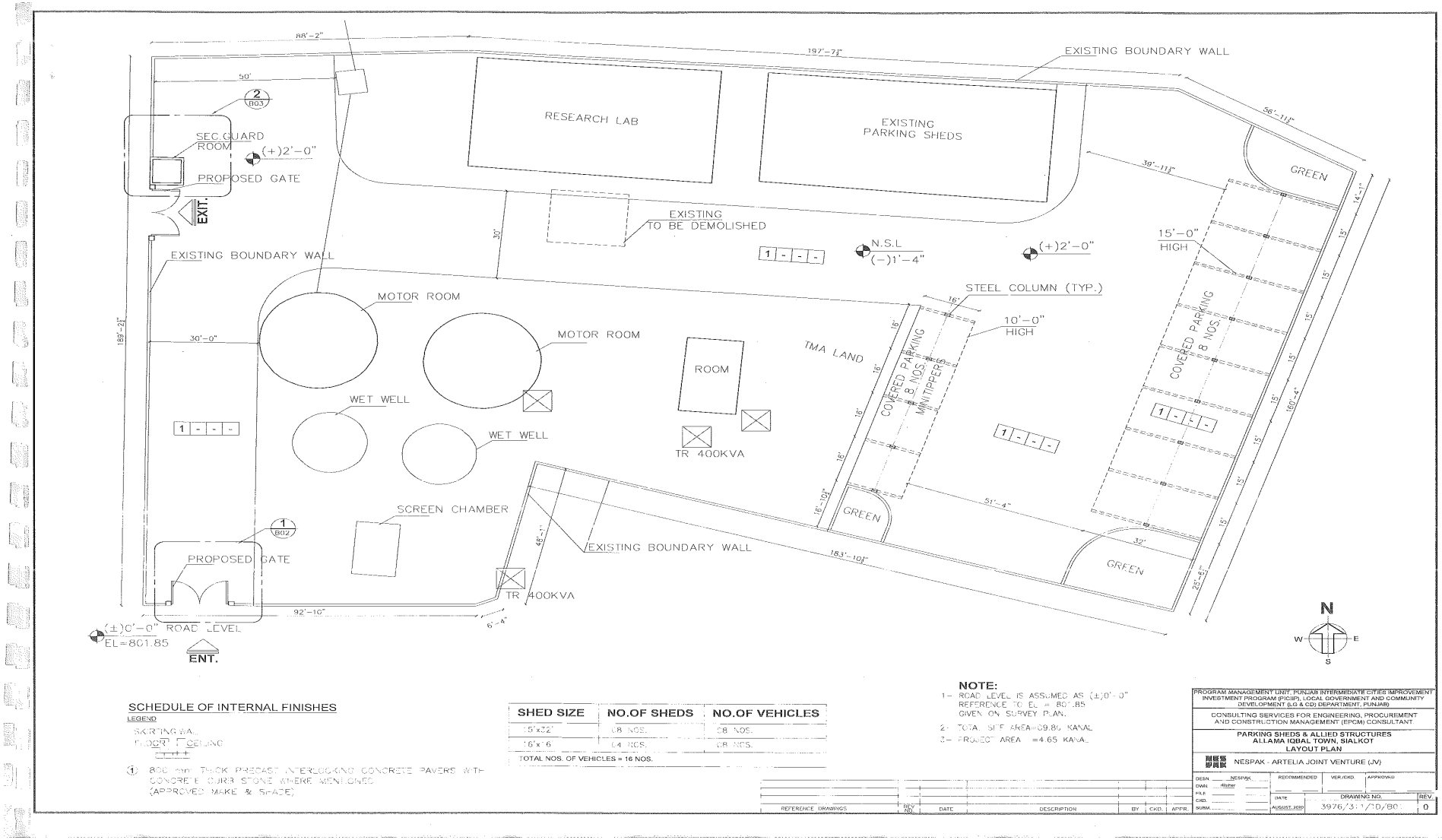

4 Description of Environment

89. This chapter describes the baseline environmental and social conditions of the project areas for the proposed Parking Sheds in Sahiwal and Sialkot. The project areas environmental conditions will describe the various resources which could be affected by the economic development that takes place, i.e. physical resources (atmospheric conditions e.g. ambient air quality and climate, topography and soils, surface water and groundwater quality), ecological resources (fisheries, wildlife, forests, rare and endangered species, protected areas etc.) and social resources.

Description of Environment Sahiwal

4.1 Physical Resources

4.1.1 Sahiwal City Geography

90. In 2014, the estimated population in Sahiwal district was 2.37 million. Of this 2.37 million, an estimated 1 million (42 percent) was urban while at an average provincial fertility rate of 1.93 percent, the district's projected population till 2035 is 3.5 million.

91. Sahiwal town is situated about 29 km from the left bank of the river Ravi, 187 km west of Lahore and 200 km east of Multan. The Grand Trunk Road and the main railway line pass through the town; they also connect Peshawar and Lahore with Karachi. The Lower Bari Doab Canal separates the town into two parts. Its approximate height is 152 m above sea level. Sahiwal lies at 30°39'52.16" N latitude and 73°6'30.54" E longitude.

92. Geologically, the area does not have any outstanding features. Saltpeter, which is made from saline earth called kallar, is found when the water table is high. In the east of the town, there can be found common salt mixed with a lesser quantity of sulfate of soda and a very small quantity of lime and magnesium salt.

93. The topography of Sahiwal consists of a flat semi-arid plain that is fertilized using its extensive irrigation canal. The Lower Bari Doab is the main source of irrigation in the area and it is fed by a link from the Chenab river. From a topographical point of view, the semi-arid plain is remarkably homogeneous. The only noticeable relief is that of the flood plain bluffs and the belts of ravines and land that were formed by gully erosion along the Lower Bari Doab and its distributaries.

Generally, the natural slope runs northeast to southwest. On the whole, the area is flat.

4.1.2 Natural and Climate Conditions of Sahiwal

94. In general, Sahiwal has the same basic natural and climatic conditions that prevail in Punjab. The climate in most of the area is arid to semi-arid, characterized by four district seasons in a year: winter from mid-November to February; spring from mid-March and April; summer from May to mid-September; and autumn from mid-September to mid-November.

95. Punjab's terrain is one of relatively low-lying plains, with several rivers that traverse the area from the northeast to the southwest and feed into the Indus River. The Ravi river is closest to Sahiwal, but it is still a distance of nearly 20 km. There is no history of the city being threatened by floods. The most challenging weather phenomenon in Sahiwal is the winds called 'Loo', which blow during the day in the predominately hot and dry summer.

Figure 4.1: Location Map of Sahiwal

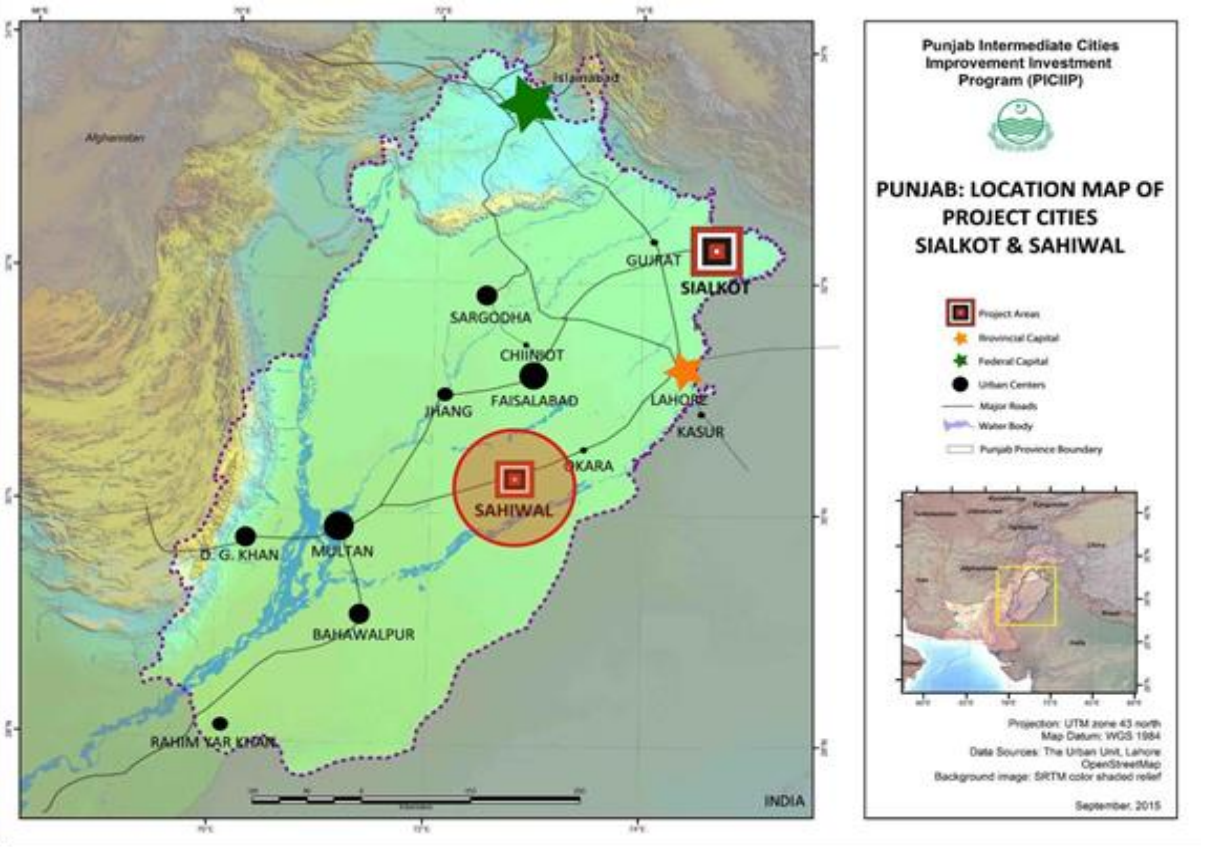

96. The dust from the dry parched earth rises, the air becomes laden with it, and out-door work is difficult. Trees shed their leaves to avoid the loss of moisture and where there is no canal or well, the countryside presents a very dreary aspect. Occasionally, the hot weather is broken by thunderstorms and dust storms. The heavy rainfall, which the thunderstorms bring, and light rain, which follows the dust storm, produces a slight decrease in temperature. This temporary relief from the excessive heat is welcomed.

97. June is the hottest month with a mean daily maximum temperature of 42.4oC. January is the coldest month with the mean daily minimum temperature of 4.4oC. The **Table 4.1** shows the mean daily maximum and minimum temperatures of Sahiwal district.

4.1.3 Rainfall

98. Average annual rainfall ranges between 97 mm and 261 mm. The maximum rainfall (about 60 percent of the total annual rainfall) occurs during the monsoon season (July, August and September), while the period of minimum rainfall or drier period is October and November. The Table 4.2 and Figure 4.2 shows the mean monthly rainfall data for Sahiwal district.

Figure 4.2: Average Rainfall in Sahiwal

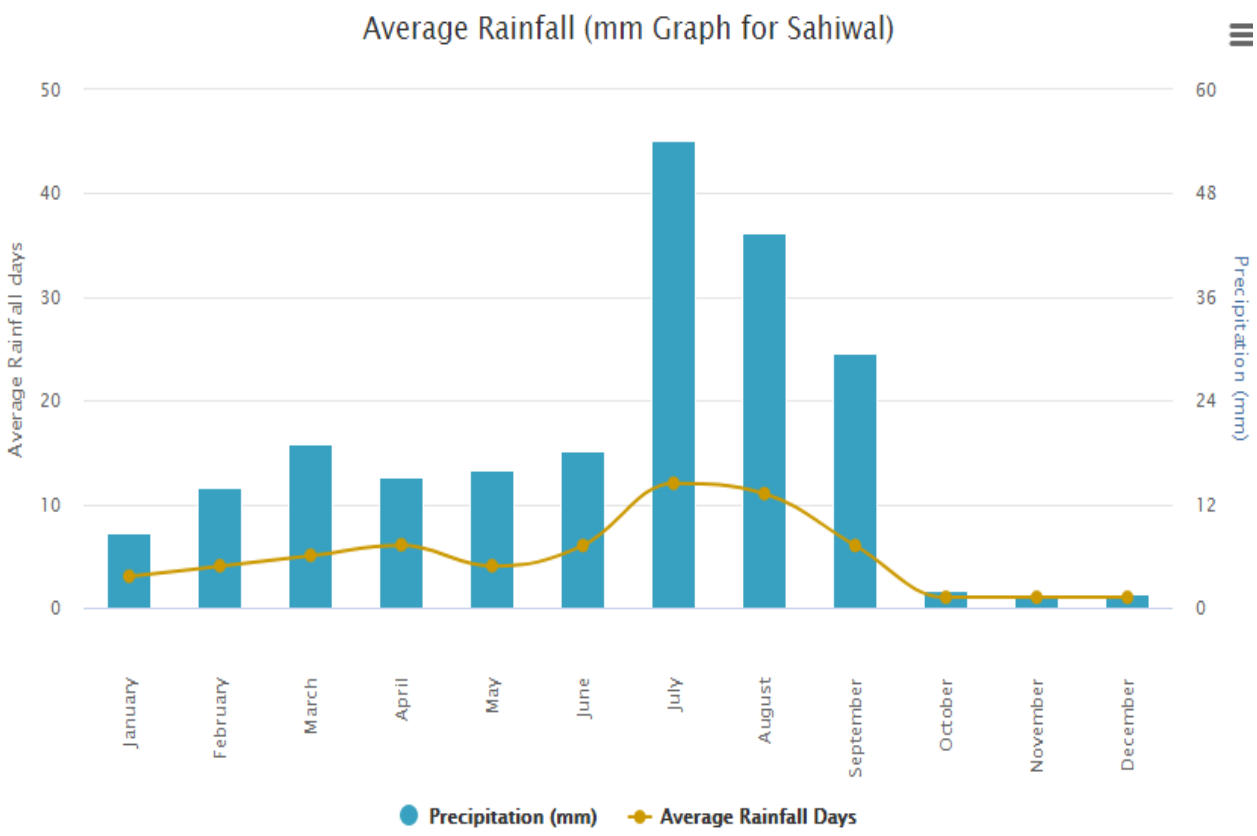

Table 4.1: Meteorological Data, Mean Monthly Precipitation of Sahiwal district

Month	Mean Monthly Precipitation (mm)
January	12.0
February	12.0
March	17.0
April	6.0
May	7.0
June	23.0
July	74.0
August	75.0
September	25.0
October	1.0
November	2.0
December	7.0
Annual	**261.0**

4.1.4 Humidity

99. July, August and September are the most humid months in the area. May and June are the least humid. The **Figure 4.3** shows the average monthly relative humidity in Sahiwal district.

Figure 4.3: Average Monthly Humidity in Sahiwal

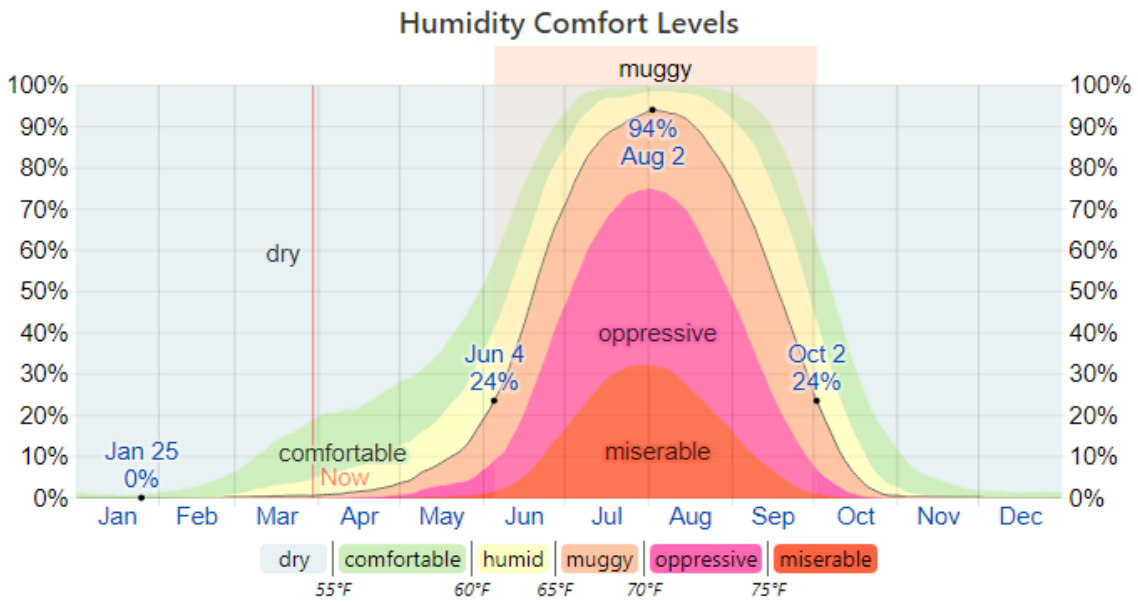

4.1.5 Temperature

100. The hot season lasts for 3.4 months, from April 23 to August 5, with an average daily high temperature above 98°F. The hottest day of the year is May 30, with an average high of 105°F and low of 82°F. The cool season lasts for 2.5 months, from December 6 to February 21, with an average daily high temperature below 74°F. The coldest day of the year is January 8, with an average low of 45°F and high of 67°F as can be seen in the Figure 4.4 and Table 4.2 below.

Figure 4.4: Average Monthly Temperature in Sahiwal

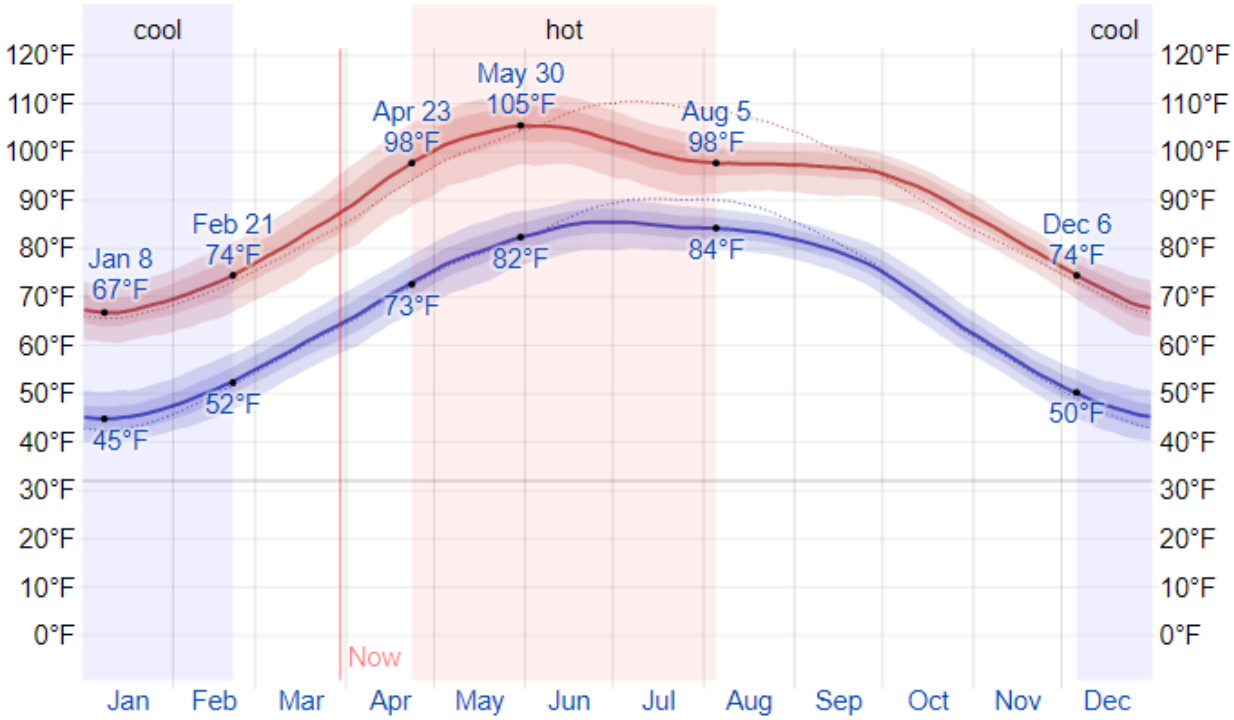

Table 4.2: Mean Monthly Maximum and Minimum Temperature of Sahiwal district

Month	Mean Monthly Maximum (ºC)	Mean Monthly Minimum Temperature (ºC)
January	19.7	5.4
February	22.8	8.4
March	28.3	13.5
April	35.2	19.2
May	40.4	24.4

June	41.4	27.7
July	38.4	28.1
August	37.8	27.2
September	36.2	24.4
October	34.6	18.1
November	28.6	10.8
December	22.4	6.4
Annual	**32.2**	**17.8**

4.1.6 Wind Direction

101. Sahiwal is situated in southwest Punjab and is influenced by monsoon winds throughout the year. In winter, the wind blows from the north and heads east. In summer, the wind direction is southwest. However, these wind directions are usually disturbed by cyclones, which cause the temperature to drop and low-pressure systems to set in. This situation prevails in autumn. The Wind rose for Sahiwal is provided as Figure 4.5 below.

4.1.7 Ambient Air Quality

102. Ambient air quality was continuously monitored for 24 hours at the Farid Town Parking Shed site in Sahiwal. The pollutant concentration parameters being exceeded was PM_{10} with 78 ug/m^3.

103. The ambient air quality in the project areas is presented as Annexure H. All the results are within the permissible levels.

4.1.8 Noise Levels

104. The ambient noise levels were also monitored at the same locations as ambient air quality i.e. Farid Town in Sahiwal. The results of the noise monitoring are provided in Table 4.5 below. As can be observed, the averaged noise levels for the location resulted in daytime noise levels of 52.4 dB, which is within the permissible level of 65 dB. Also, the nighttime noise limit is not being exceeded with average nighttime noise levels monitored to be 43.1 dB. The detailed noise level results are provided as Annexure H.

Figure 4.5: Wind Rose for Sahiwal

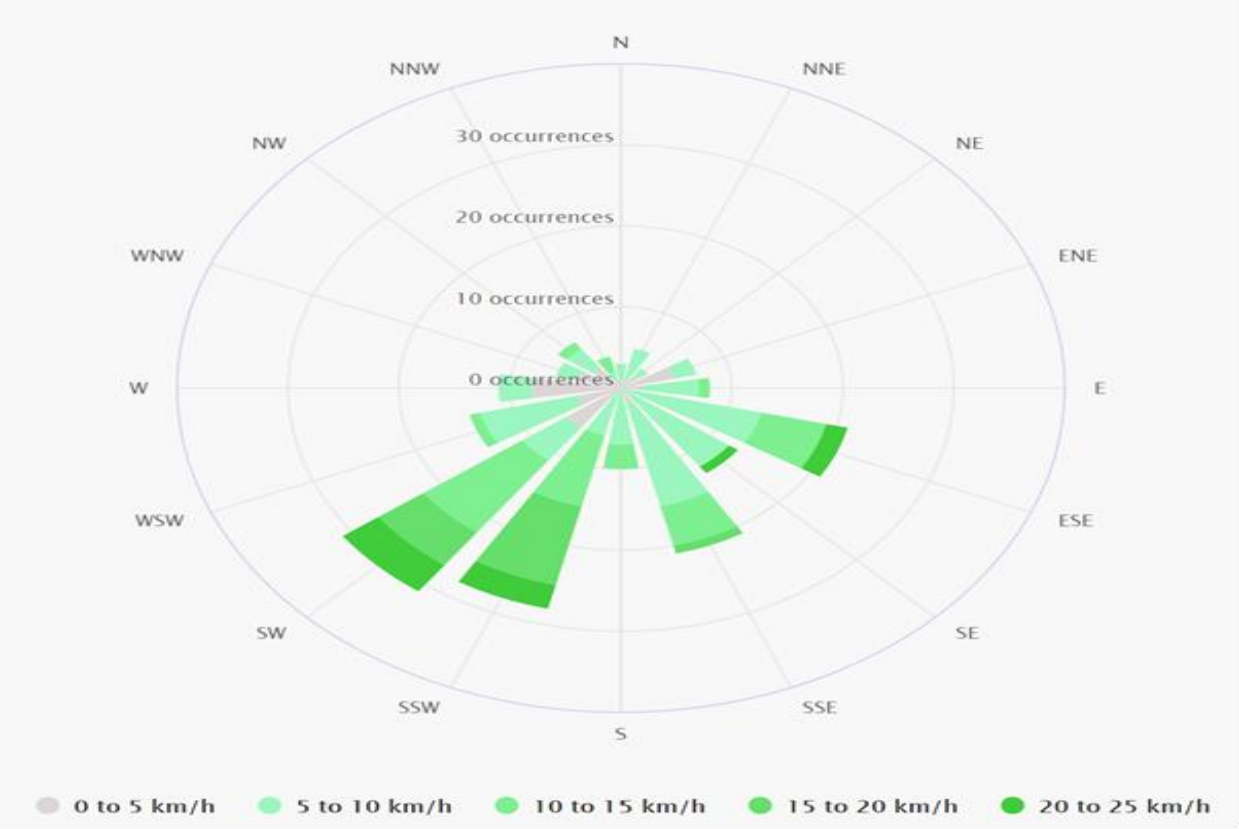
N
NNE
NE
ENE
E
ESE
SE
SSE
S
SSW
SW
WSW
W
WNW
NW
NNW
30 occurrences
20 occurrences
10 occurrences
0 occurrences
0 to 5 km/h
5 to 10 km/h
10 to 15 km/h
15 to 20 km/h
20 to 25 km/h

Figure 4.6: Map of Monitoring Location Sahiwal

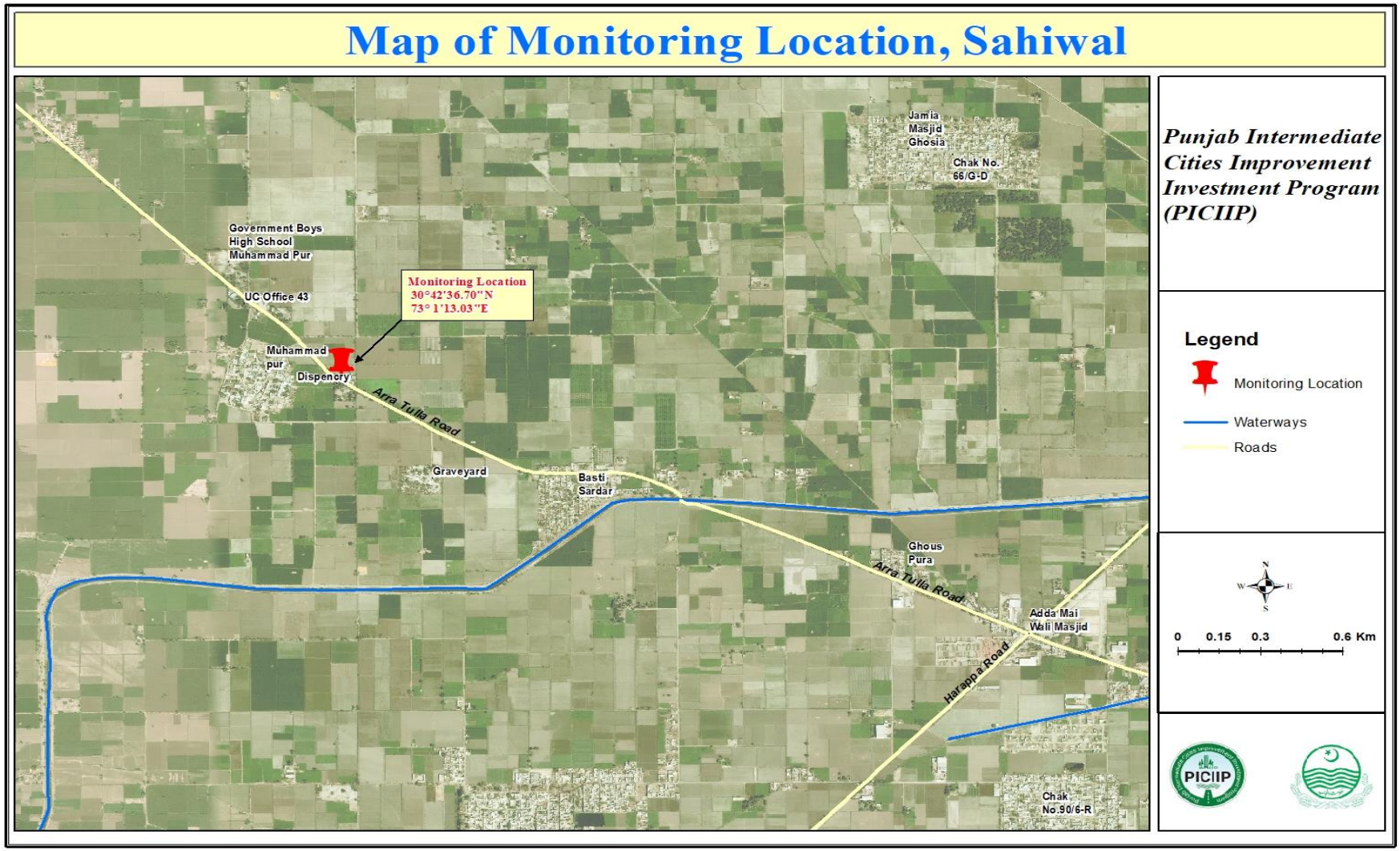

Table 4.3: Comparison of Ambient Air Quality Results Versus Applicable Air Quality standards

Monitoring Location	Parameter	NO (ug/m^3)	NO_2 (ug/m^3)	CO (ug/m^3)	SO_2 (ug/m^3)	NOx (ug/m^3)	$PM_{2.5}$ (ug/m^3)	PM_{10} (ug/m^3)	O_3 (ug/m^3)
Applicable Guideline (ug/m^3) for 24 hrs		**-**	**80**	**-**	**20**	**-**	**25**	**50**	**130**
Farid Town	**Average**	13.27	15.72	0.28	10.87	28.99	19	78	15

'Exceeding' applicable guidelines for acceptable pollutant levels **'Within' applicable guidelines for acceptable pollutant levels**

Table 4.4: Ambient Noise Monitoring Results (24 hrs) in Project Area

Monitoring Location	Parameter	Noise Reading Results	Noise Guideline (Commercial Area)	Compliance Status for Commercial Areas
Day Time Readings (0600 to 2200)			**Day time**	
Farid Town	dB(A) Leq	**52.4**	65	
Night Time Readings (2200 to 0600)			**Night time**	
Farid Town	dB(A) Leq	**43.1**	55	
Average Noise Levels (24 hour average)	dB(A) Leq	**47.7**		

Exceedance from applicable guidelines

'Within' applicable guidelines

Table 4.5: Meteorological Data, Mean Monthly Relative Humidity

Month	Mean Monthly Relative Humidity (%)
January	62.3
February	56.3
March	51.6
April	40.0
May	33.2
June	39.9
July	56.0
August	59.7
September	56.3
October	51.6
November	61.4
December	66.6
Annual	**52.9**

4.1.9 Seismicity

105. Pakistan lies in a seismically active zone. Seismic observations indicate that hundreds of shocks occur in the region every year. According to the seismic zoning map of Pakistan, included in Pakistan Building Code Seismic Provisions (2007), the project area falls under seismic zone 2A, with a peak horizontal ground acceleration of from 0.08 to 0.16. The seismic zoning map of Pakistan is given as Figure-4.7 below.

Figure 4.7: Seismic Zoning Map of Pakistan

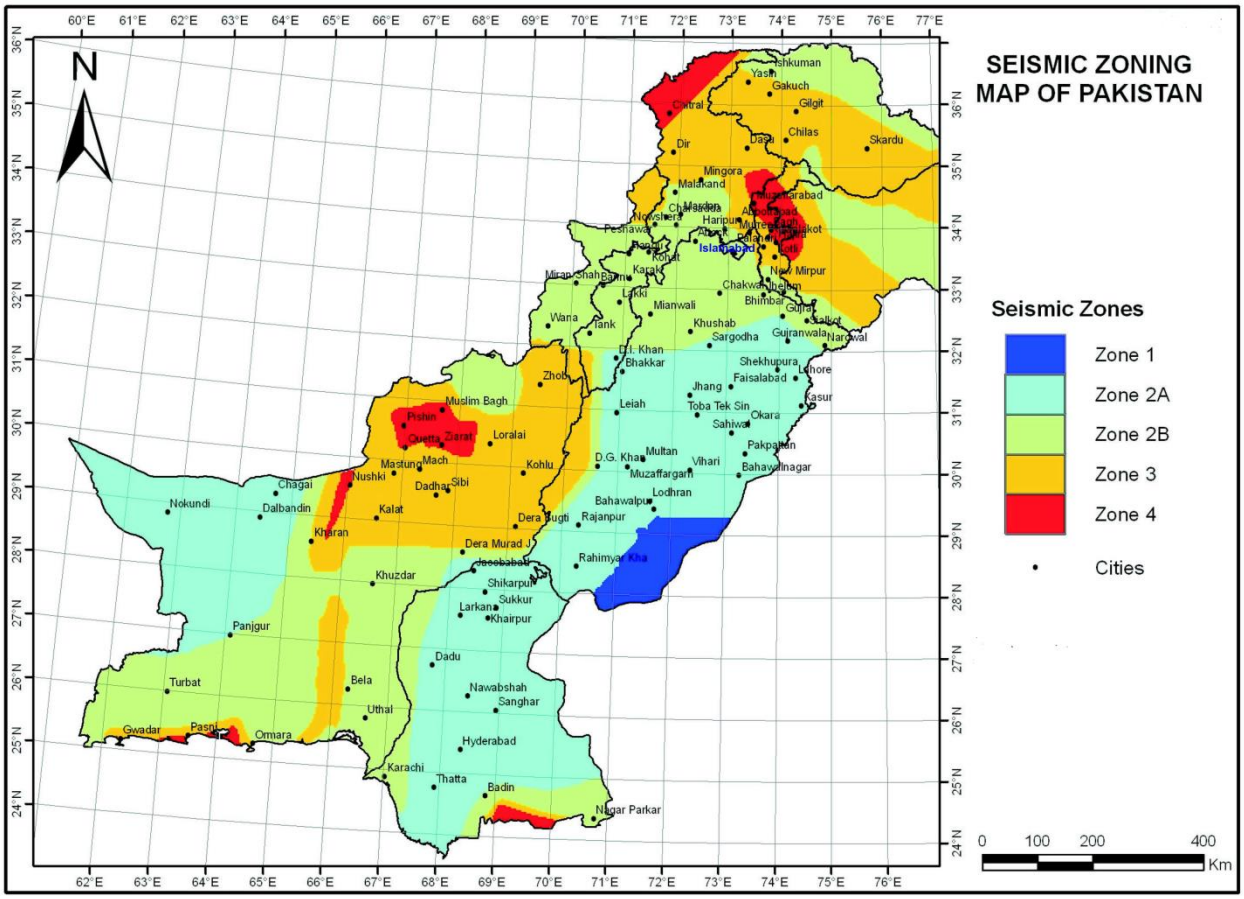

4.1.10 Groundwater

106. Groundwater is the sole source of potable water exploited in Sahiwal. The water table averages about 12 to 15 m below ground level and the upper levels produce limited quantities of mineralized water. At a depth of between 137 and 152 meters, greater quantities of good quality groundwater are available and this is where the city‘s supplies are abstracted from. In recent years, the water table has been dropping at a rate of 0.30 meter per year. This is because of pumping, and decreased rainfall and recharge. It is not clear whether the aquifer is being overexploited but, in view of the wide dispersal of the tube wells, this is unlikely at the present level of abstraction.

107. The ground water was extracted from the nearby available tap at project site Farid Town and analysed to assess its suitability for drinking purposes. The detailed results of this monitoring are provided as Annexure H.

Table 4.6: Water Quality Results

Sr. No.	Parameter	Units	PEQS	Result
1	pH	-	6.5-8.5	6.74
2	TDS	mg/l	<1000	639
3	Odor	Unobjectionable	Unobjectionable	Unobjectionable
4	Taste	Unobjectionable	Unobjectionable	Unobjectionable
5	Color TCU	Unobjectionable	<15	Unobjectionable
6	Chloride	mg/l	<225	128
7	Phenolic compounds as phenols	mg/l	-	0.04
8	Hardness	mg/l	<500	131
9	Turbidity	NTU	<5	0.68
10	Fluoride	mg/l	<1.5	0.39
11	Nitrate (NO3)	mg/l	<50	1.5
12	Nitrite (NO2)	mg/l	<3	0.0021
13	Cyanide (CN)	mg/l	<0.05	BDL
14	Cadmium	mg/l	0.01	BDL
15	Manganese	mg/l	<0.5	BDL
16	Zinc	mg/l	5	0.01
17	Arsenic	mg/l	<0.05	0.04
18	Copper	mg/l	2	BDL
19	Lead	mg/l	<0.05	BDL
20	Nickel	mg/l	<0.02	BDL
21	Aluminium	mg/l	<0.2	0.04
22	Chromium	mg/l	<0.05	BDL
23	Mercury	mg/l	<0.001	BDL
24	Selenium	mg/l	0.01	BDL
25	Antimony	mg/l	<<0.005	BDL
26	Barium	mg/l	0.7	BDL
27	Boron	mg/l	0.3	BDL
28	Chlorine	mg/l	1.0	BDL
29	Total Coliform	CFU	0	0
30	E.coli	CFU	0	0

108. Based on analysis of these water samples and their comparison with the applicable drinking water quality standards, it can be assumed that at Farid Town, all parameters for drinking water quality were within the permissible limits.

4.2 Ecological Resources

4.2.1 Flora of the Area

109. In Sahiwal district, the most important species of trees are Kikar (Acacia Arabica); Shisham or Tahli (Delbergia sissoo); Beri (Zizyphus jujube); Toot (Morus

alba); Sharin (Albizzia lebbek); Dherek (Melia azeharach); Phulai (Acacia modesta); Pipal (Ficus religiosa); and Bohr (Ficus bengalansis), which are planted for shade. The trees in Rakhs mainly consist of three species: Jand (Prosopis spicigera); Karir (Capparis aphylla); and Wan (Salvadora oleoides). Occasionally, Rero (Acacia ieucophhloea) and Farash (Tamarix articulata) are also found. The Pilchhi (Tamarix dioica) is found on moist sandy soils along riverbanks and is used for wicker work, and basket making, etc. Mesquite bushes and some Eucalyptus trees grow wild in the areas along the canals, roads and barren land, but natural forest cover has been significantly reduced.

110. Sahiwal is a green and fertile town with 11,522 forested acres. The area's main crops are wheat, cotton, sugarcane, maize, sorghum forage and rice. Main fruits grown are citrus, mangoes and guava.

111. Sahiwal district of Indus basin plain, falls under Tropical Thorn forest type and has a hot semi-arid climate intermediating between Desert climate and Humid climate in ecological characteristics with agricultural potential. The climate tends to have hot, sometimes extremely hot, summers and mild warm winters. The soil and climatic characteristics support short or scrubby vegetation which can be termed as open and pronouncedly of xerophytic nature in which thorny leguminous species predominate. However, commonly found vegetation (Trees, Shrubs, Grasses) of project as well as study area include species given in the **Tables 4.6** to **4.8** below.

Table 4.7: Name of Trees

S. No.	Common Name	Scientific Name	IUCN Status
1	Kikar	*Acacia nilotica*	NA
2	Shisham	*Dalbergia sisso*	NA
3	Simal	*Bombax ceiba,*	NA
4	Sufeda	*Eucalyptus species*	NA
5	Frash	*Tamarix articulate*	NA
6	Neem	*Azedarachta indica*	NA
7	Jaman	*Syzygium cumini*	NA
8	Bakain	*Melia azedarach*	NA
9	Ber	*Zyziphus mauritiana*	NA
10	Toot	*Morus alba*	NA
11	Lasura	*Cordia myxa*	NA
12.	Sukh Chaen	*Pongamia glabra*	LC
13.	Mesquite	*Prosopis juliflora*	NA
14.	Date Palm	*Phoenix dactylifera*	NA

NA= Not Assessed LC= Least Concern

Table 4.8: Name of Shrubs and Herbs

S. No.	Common Name	Scientific Name	IUCN Status
1	Akk	*Calotropis procera*	NA
2.	Phog	*Calligonum polygonoides*	NA
3	Jantar	*Sesbania aculeate*	NA
4	Bathu	*Chenopodium botrys*	NA
5	Lana	*Suaeda fruticosa*	NA
6	Arind	*Ricinus communis*	NA
7	Piazi	*Asphodelus tenuifolius*	NA

NA= Not Assessed

Table 4.9: Name of Grasses

S. No.	Common Name	Scientific Name	IUCN Status
1	Khabbal	*Cynodon dactylon*	NA
2	Dab	*Desmotachya bipinnata*	NA
3	Khawi	*Cymbopogan jwarancusa*	NA
4	Kana	*Saccharum munja*	NA
5	Gorkha	*Elionorus hirsutus*	NA
6	Kai	*Saccharum spontaneum*	LC

NA= Not Assessed, LC= Least Concern

112. **Existing Trees:** The project area is flat agricultural land which supports trees of various species on the boundary of agricultural fields as well as individually scattered growth. Trees (girth 61 cm and above) and pole crop (girth 20 to 58 cm) standing within the project area were enumerated along with their kind of species. The detail of trees present in the project area is given in Table-4.9 below.

Table 4.10: Species Wise Tree Distribution

Sr. No.	Species	No. of Trees		
		Poles (girth 20 to 58 cm)	Trees (girth 61 cm and above)	Total
1	Kikar	5	12	17
2	Shisham	8	10	18
3	Toot	7	13	20
4	Miscellaneous	5	7	12
	Total	**25**	**42**	**67**

Miscellaneous includes Sukh Chaen, Lasura, Jaman, Neem, Date Palm

4.2.2 Fauna of the Area

113. Most of the Punjab is under intensive irrigated cultivation. Livestock rearing is also extensively practiced, and milk animals are common. The use of chemical fertilizers and pesticides is also very common. Several species of wildlife have adapted to the changed habitat. These include, the jackal; jungle cat; Bengal fox; small Indian mongoose; shrew; hog deer; ravine deer; black buck; blue bull; wild hare; and rodent pests, including porcupine; fruit bats; and wild boar. The avifauna that has survived the modified habitat include doves; black partridge; cuckoos; koel; woodpeckers; parakeets; bulbuls; babblers; black drongo; bee eaters; finches; owls; hawks; and house sparrow. The reptilian species of this modified habitat include krait; cobra; saw scaled viper; rat snake; and monitor lizard.

114. In these modified habitats, due to the extensive use of pesticides in these areas, the winter bird species from the Himalayas have been reduced, since these species feed on the insects. These birds play an important role in controlling insects, particularly in the forests.

115. Scavengers, such as, jackals are attracted to garbage dumps and human faeces for food. House sparrows breed in houses. Bank mynas and cattle egrets feed on grasshoppers that are present in the rangelands that also support cattle and buffalos. Banyan and peepal trees still grow in the villages. Green pigeons and barbets feed in these trees.

116. Some of the oldest trees still stand in the old British-era colonies. Some rare species of birds, such as hornbills, green pigeons, and barbets still live on these trees. Large populations of pigeons breed in urban houses. Kites, crows, mynas, house sparrows and alexandrine parakeets breed in urban areas. Shisham and acacia trees are usually planted along the roads and canals. Doves mainly breed on these types of trees.

117. The extent of fauna presence is related to the availability of vegetative cover in an area. Since the project area is basically agricultural supporting chunk of land without any dense forested area nearby, it lacks richness in natural fauna. No conspicuous wildlife was observed in the area during field visit However, mammals and birds reported in the project area, are given in Tables 4.10 to 4.12 below.

Table 4.11: Names of Mammals

S. No.	Common Name	Scientific Name	IUCN Status
1	Jackal	*Canis aureus*	LC
2	Fox	*Vulpus bengalensis*	NA

3	Porcupine	*Hystrix indica*	LC
4	Squirrel with strips	*Funambulus pennanti*	NA
5	Mouse	*Mus musculus*	LC
6	Mongoose	*Herpestes auropunctatus*	NA
7	Indian Hare	*Lepus nigricollis*	LC

NA= Not Assessed, LC= Least Concern

Table 4.12: Names of Reptiles

S. No.	Common Name	Scientific Name	IUCN Status
1	Cobra	*Naja naja*	NA
2	Spiny tailed Lizard	*Uromastyx hardwickii*	NA
3	Fringed Toed Lizard	*Acanthodactylus cantoris*	LC
4	Indian Krait	*Bungarus caeruleus*	NA

Table 4.13: Names of Amphibians

S. No.	Common Name	Scientific Name	IUCN Status
1	Common Frog	*Rana tigrina*	LC
2	Common Toad	*Bufo bufo*	LC

118. The area is comparatively dry and does not support wide variety of birds. The common species found in the project area are enlisted in Table-4.13.

Table 4.14: Names of Birds

S. No.	Common Name	Scientific Name	IUCN Status
1	House Sparrow	*Passer domesticus*	LC
2	Mynah	*Acridotheres tristis*	LC
3	House Crow	*Corvus splendens*	LC
4	Pigeon	*Columba livia*	LC
5	Koel	*Eudynamys scolopacea*	LC
6	Red-Wattled Lapwing	*Vanellus indicus*	LC
7	Gray Partridge	*Francolinus Pondicerianus*	LC
8	Quail	*Coturnix coturnix*	LC
9	Red Vented Bulbul	*Pycnonotus cafer humayuni*	NA
10	Little Bittern	*Ixobrychus minutus*	LC
11	Hoopoe	*Upupa epops*	LC

12	Ring Necked Dove	*Streptopelia decaocto*	LC
13	Little Egret	*Egretta garzetta*	LC

119. On account of anthropogenic interventions mainly agriculture, no habitat is left to support much of wildlife in the project area. None of the existing species of plants or animals, therefore, are of endangered category.

4.2.3 Protected areas / National Sanctuaries

120. There is no protected area or national sanctuary near the area of where work will take place on the sub-project.

4.3 Socio-Economic Development

121. Before the introduction of the canal system, Sahiwal was an area of barren land. However, owing to irrigation, it has become very fertile. The real achievement occurred when the Lower Bari Doab canal was constructed in 1913. Later, the Deepalpur and Pakpattan canals brought almost the entire district under irrigation. Now, the district is one of the most fertile areas of the province and a leading grower of cotton.

122. In the early days, the town had been declared a congested area. Due to an influx of refugees from India and also to recent industrialization, it has attracted a considerable number of people. Consequently, two new sub-towns have cropped up beside the old part of the town.

123. There is a new Abadi on the eastern side of the old town and a modern satellite town, known as Farid Town, on the northwestern corner. At the time of its establishment, the area of the original town of Sahiwal was small. However, it grew with the passage of the time, and is now its total area is about 19 square kilometers. The city's major growth took place during the post-1947 period. However, the trend of this growth, even during this period, has largely been in a northerly direction. The city could not grow to the south, perhaps due to the obstruction of Railway line, and the Lower Bari Doab Canal and its distributaries. The city has also spread out toward the east in what appears to have been the result of forced development.

124. Due to this industrial development and the land's fertility, the city began to flourish and emerged as a place that attracted in-migration. In short, Sahiwal became a place where people wanted to reside. During the decades of 1911-1921, and 1921-

1931, the city attracted the highest ever percentage of people. During these decades, the population growth rate was 79.7 percent and 79.3 percent, respectively.

125. The city also became important from a business point of view. It is situated at the point from where all types of communication are available to connect it and its people with the rest of the province and with the larger country as well. A great change has occurred in its economic structure, as it transitioned from an agricultural to an industrial economy. The town is now a commercial one, with a shopping center that caters to both the town people and also to those living in nearby localities.

4.3.1 Land Use and Settlements Pattern

126. Land use includes residential, commercial, industrial, recreational, and institutional activities, among others. A suitable arrangement of the physical elements of land use ensures that a town offers convenience, health and a better quality of life. The city comprises buildings, transportation channels, utilities, social services, and also vacant land, which may be used for agricultural purposes.

127. In August, 1972, the Punjab's Housing and Physical Planning Department began a land-use study of Sahiwal city, which it completed in September the same year. Out of the total area surveyed, the largest portion of the city consisted of undeveloped area that accounted for 41.70 percent of the total area surveyed. The scattered pockets of development exist within the built up areas and also in open strips of land that were situated between various built-up belts of development that ultimately abutted the agricultural land around the city. Since the undeveloped area made up a substantial percentage of the city's surveyed area, it was considered desirable to not take this percentage into account when calculating the percentage of area given to various land uses in the city. Consequently, the survey only included the built up area, revealing that 31.31 percent was for residential use. The transportation system was second largest user of land, occupying 18.58 percent of the total built up area. Other uses include, industry (occupying 3.85 percent); open spaces (8.54 percent); commerce (1.76 percent), and health (0.74 percent). Other important users of land are canals, distributaries, transport terminals, and Government buildings, which occupy 9.64%, 7.07% and 5.28% of the built-up area, respectively.

128. As for the land use pattern, originally the city was designed to be a planned colony town, covering an area of only about 307 acres (1,242,429 m2). The city was designed with the oval as the main focal point. The road network radiated from its center toward a city space that consisted of a mixture of residential and commercial

uses. Major bazaars and residences were established in the small streets that ran off the major arteries. Functions, such as administration, education, and transportation, were situated around the commercial and residential parts of the old town. After independence, the city further developed and emerged into a major administrative industrial and commercial town. Since no comprehensive plan was devised, land in the town was given to various uses, irrespective of its suitability. These uses were mostly based on expediency rather than the principals of the land development. Consequently, the present-day city is a mixture of various and, quite often, incompatible uses. Except for the new planned colony, there has been an intensive mixing of land use, particularly among small-scale cotton factories, etc. However, for an overall pattern of land use, the city can be divided into following major zones:

4.3.2 Zone of Central Commercial Activities

129. This is limited to the old city and is surrounded by High Street, Railway Road, Hall Road, Masood Shaheed Road, the Deepalpur Bazar, and the few scattered roads that join this area. Development in this area of is of a ribbon type, along with its major bazaars, i.e., Pakpattan , Sadder , Deepalpur Sori Galli, and Sua Bazars, and is further extended up to Jinnah Chowk. The development of the commercial activities within this area is mainly due to historical reasons rather than to any planned effort.

130. A variety of commercial activities take place here, namely wholesale, and large specialized retail, etc., which cater to the needs of the entire city and the surrounding rural and urban areas that are concentrated in this zone. The shops usually have residential quarters, either attached to or above them, where the owner might be living. There is hardly any exception to this practice. The areas between the main streets form pockets that are filled with residential uses but, even here, it is common to see small shopping facilities scattered here and there. These bazars have developed, over the years, into their present form and will also retain this form in the future.

4.3.3 Zone of Mixed Land

131. The vegetable and fruit markets are also located in this area. They cause the usual nuisance to the residents and make it unattractive for living. The other uses are for restaurants, hotels, bus stands, and commercial offices. Among these, the bus stands, which cater to the needs of the city and the adjoining chaks (villages), create hindrances and chaos in the area.

4.3.4 Zone of Industrial Complexes

132. This zone as unlike those in the other cities of the Punjab, and is located on and across the Lahore Multan Quetta (LMQ) road. The majority of the large industrial units are found in this zone, however, a few small units are also scattered throughout the city. The reasons for setting up large-scale industry here, between the railway line and the LMQ road and across the LMQ Road, are neither deliberate nor due to any planning criteria. It is the result of the cheap rates for the land and the cheap communications that serve it. However, this development is also ribbon-like, similar to the development along the LMQ road, starting from chowk Pakpattan up to the Arifwala Chowk, and further up to new powerhouse and the grid station. The presence of a 9L water distributary has further helped this area develop for industrial purposes.

4.3.5 Zone of Administrative and Educational Buildings

133. This zone comprises the civil lines areas, the canal colony, the Government Boys College complex and the hospital. It further extends up to the Batala School and the Government Girls College. From its beginning, the civil-lines area is at the center of the administrative functions of the city, the district and the region. It extends up to the Boy's Degree College, and the canal colony, and covers a substantial part of the built up area of the entire city. In addition to being the center of administrative functions (almost all of the government offices are situated in this area), the city's main open spaces are situated in this zone, i.e., the stadium and the race course.

4.3.6 Zone of Planned Colonies

134. The zone of the planned colonies comprises the area of the satellite town known as "Farid Town." Its land-use character is very distinct and different from the old city. Comparatively, its residential density is very low. Both the planned colony and the canal colony were situated in their present locations due to the availability of government land.

135. To sum up, the land use of the city, as a whole, can be described as having developed out of sprawl and without any preconceived plan that could have coordinated the land of one area with that of another or with the transportation system. The result is the prevalence of chaos and unpleasant living conditions. The Table 4.16 presents the areas and proportions of various land uses in Sahiwal:

Table 4.15: Land Use Distribution in Sahiwal

#	Land Use	Area		% of Total Area
		Acre	Sq. Km.	
1	Residential	1,143.14	4.63	36.1
2	Commercial	139.97	0.57	4.4
3	Agricultural	520.35	2.11	16.4
4	Public Buildings	357.86	1.45	11.3
5	Religious	23.32	0.09	0.7
6	Education	416.14	1.68	13.1
7	Health	18.72	0.08	0.6
8	Industry	55.97	0.23	1.8
9	Graveyard	53.34	0.22	1.7
10	Parks/Open Spaces	160.46	0.65	5.1
11	Vacant Area	175.70	0.71	5.6
12	Mixed Land use	99.97	0.40	3.2
Total Area		**3,164.94**	**12.81**	**100**

Source: Urban Unit data

4.3.7 Agriculture and Livestock

136. Agriculture is by far the main economic activity in the project area. The main crops, during Rabi, are wheat, gram, rapeseed, mustard, barley and oil seeds. During Kharif, crops include cotton, jawar, sugarcane, bajra, maize, and rice. In addition, there are subsidiary crops known as Zaid Rabi, such as Kharbooza, tobacco and potatoes, and also Zaid Kharif crops, such as potatoes and chilies. The main fruits grown are oranges, watermelon, muskmelon, guava, citrus, falsa, jaman, and pomegranate. When cultivation began, the inhabitants ate pilu and bair, the only wild fruits that grows, intermittently, in the region. With the introduction of canal irrigation, other fruits are now being grown on a commercial basis. However, wheat, cotton, sugarcane and rice remain the major crops.

137. Main Crops: Sugarcane, wheat, rice, maize and cotton are the main crops grown in the area. Besides guar seed, bajra, moong, mash, masoor, jawar, oil seeds are also grown in minor quantities in Sahiwal area. Average yield of important crops in the area of study is given below in Table 4.15.

Table 4.16: Average Yield of Agricultural Crops

Sr. No.	Crop Name	Average Yield/Acre (kg)
1	Cotton	1,000
2	Sugarcane	20,600
3	Maize (Spring)	3,400

4	Maize (Autumn)	2,800
5	Rice	800
6	Wheat	1,400
7	Potato	9,600

138. The vegetables are grown in abundance, as the water and soil are suitable for cultivation. Crops include potatoes, carrots, ladyfingers, chilies, onions and cauliflower. Bitter gourd, turmeric and garlic are also grown to meet public demand. Other vegetables include radish, tinda (apple gourd), and bringal.

139. Fruits: Citrus, guavas and mangoes are the main fruits grown in the district. Besides, pomegranate, litchi, falsa and banana are also raised on minor scale.

140. Livestock breeding is one of the main pursuits and means of livelihood among the rural and urban population in the project site. Common livestock are sheep, goats and cows, which serve as an important source of income.

141. Fisheries: Fishery sector is not rich in district Sahiwal on account of precious fertile land for agriculture production. Not much variety of fish is found in the LBDC and other nearby water bodies, except Gulfam fish (Cyprinus carpio), which is basically cold-water species, but has adapted to harsh conditions. However, dependency of local people on fish as economic activity is very limited, because of the non-existence of large fish farms in the area.

4.3.8 Power

142. As with the rest of the country, Sahiwal does not have an adequate, reliable and uninterrupted 24/7 power supply. Interruptions are frequent, forcing industries, other businesses, and many of the residents who can afford it to rely on back-up diesel generators and uninterrupted power supply systems. These are costly, environmentally degrading and generally a poor second option. Power generation and primary distribution are generally beyond a single urban center's capacity, so it is necessary to rely on provincial and national government support. Any city with reliable power enjoys an immediate competitive advantage. Solar options for institutional and residential use are increasing in popularity, but the technology has not reached the stage where it can provide the major energy source for heavier industry.

4.3.9 Industrial Activity

143. There are three industrial sites in Sahiwal district, and more than 200 industries. There is also a small industrial estate, developed by the Punjab Small Industrial Corporation. It consists of 188 plots situated on about 52 acres land.

Sahiwal is famous for its cotton ginning and pressing, its tannery, textiles, leather products, garments, pharmaceuticals, flourmills, and food industry. Sahiwal is also one of Pakistan's major multi-crop areas, and many pesticide companies do business here. Major industries include, Mitchell's Fruit Farms Limited; Engro Foods Limited; Beakers Land and Sweets Factory; Ittefaq Sugar Mills Limited; Baba Farid Sugar Mills Limited; Lackson Tobacco, Philip Morris Tobacco; Fauji Fertilizer Company; Habib Oil Mill; and Aziz Leather Craft, etc.

144. Most of the larger industries, such as Engro Food, Philips Morris Tobacco, dairy product plants, and other agro-based industries are situated along Multan Road, south of the canals, and along the ribbon developments outside the municipal limits.

145. The business community of Sahiwal district earnestly felt the need to establish a Chamber of Commerce & Industry, in Sahiwal. A group of traders and Industrialists succeeded in obtaining a license from the Government of Pakistan's Ministry of Commerce. After incorporation with Security Exchange Commission of Pakistan, under Companies Ordinance 1984, the Chamber became affiliated with the Federaton of Pakistan Chambers of Commerce & Industry.

146. The primary objective in establishing the Sahiwal Chamber of Commerce & Industry (SLCCI) was to provide businessmen in the area with an opportunity to strengthen the economic growth of Sahiwal, in particular, and the country, in general. Industry growth will certainly reduce unemployment in the area.

147. The prime objective of the SLCCI is to serve its members to their utmost satisfaction. The SLCCI acts as a bridge between the government and the business community. It plays an important role in policy formulation by maintaining a constant interaction with the relevant authorities.

4.3.10 Water Supply Service

148. The water supply is obtained from ground water and 46 tube wells. The water supply network covers 90 percent of the town and serves 90 percent of the total population. The distribution system consists of eight overhead reservoirs with a 450,000-gallon capacity. The distribution consists of a looped network made of different types of materials, including asbestos concrete, PVC, MS, and duct Iron pipes. Pipe sizes vary from 76 to 305 mm in diameter.

4.3.11 Sewerage System Service

149. The sewerage and drainage system covers 90 percent of the total area of Sahiwal through a 40 km sewerage network. Wastewater is disposed of in a nearby sewer system, which pollutes the surrounding environment and causes waterborne diseases. The residential areas are rapidly expanding to the north side of the town, and slower expansion is taking place toward the east, reducing the coverage of the facility to between approximately 20 and 30 percent.

150. Municipal wastewater is being used for irrigation purposes, according to farmers' demand, and the remaining wastewater is disposed of into rivers through drains and nullahs.

4.3.12 Solid Waste Management

151. The solid waste generation from Sahiwal city is overwhelmingly domestic and primarily organic in composition. Some industrial solid waste varies in different parts of the city. The main problems with refuse collection and disposal are old machinery, polythene bags, anti-social habits, lack of supervision, and the encroachment of open sewers.

152. Currently, there is no proper system of waste disposal in Sahiwal. Collected waste is dumped at designated dump sites, at Ratti Tibbi, without any environmental safeguards, such as segregating infectious hazardous waste produced by tanneries, slaughterhouses, and hospitals. Presently, only 32 percent of solid waste is being collected and disposed of. However, with increasing economic activity in agriculture and manufacturing, the environmental and health situation will continue to worsen in the absence of proper disposal mechanisms.

153. The Sahiwal Municipal Corporation (SMC) manages Sahiwal's existing solid waste management system. The existing solid waste collection, in general, is divided into a primary and secondary system. Sahiwal city comprises of ten union councils, each of which has its peculiar characteristics in terms of land use the composition of waste generated. The amount of waste generated and the extent of pollution varies from union council to union council. The allocation of sanitary staff in the union councils does not commensurate with the workload, thereby resulting in huge heaps of waste piling up on the streets and in open places.

154. There is no available data on the composition of the waste generated in the city and there is no concept of the segregation of infectious/noninfectious and

hazardous/nonhazardous wastes produced by industries, slaughterhouses and hospitals.

155. The SMC has prepared a PC-1 “Integrated Solid Waste Management System in Sahiwal, the estimated cost of which is Rs 135.68 million. The aim of this project is environmental improvement by enhancing institutional capacity and improving the collection, transportation, and disposal of the city’s solid waste, hospital waste, and slaughterhouse waste.

156. Presently, the SMC’s primary waste collection is carried out by the use of handcarts and is taken to open places of heaps on roadsides, followed by secondary collection through tractor trolley, and final dumping at the Ratti Tibbi dump side. Under the present scenario, only 32 percent of solid waste is being collected, transported and disposed of.

4.3.13 Transport

157. Sahiwal city has a total road length of 40 km, of which the regional road/highway is 10 km long. There are 12 km of major roads and 18 km of branch roads. In addition to that, there are numerous streets, which crisscross the city. Also there are about 11 important junctions in the network, out of which six are roundabouts and the remaining function as chowk.

158. Out of the total urban area of 1,652 hectares (16,515,870 m2), 55 percent offer good vehicular accessibility, 25 percent are fair, and 20 percent offer poor vehicular accessibility. Since the city is basically a planned town, numerous roads in the network are fairly wide. About 9 percent of roads are 37 meter wide, 22 percent are 34 meter wide, 20 percent are 24 meter wide, and 49 percent are 18 meter wide or less.

159. The transport infrastructure in Sahiwal is generally adequate for its existing requirements; there are relatively few circumferential links. This results in extended journey times for many trips and the misuse of minor roads by through traffic. There is little provision for off-street car parking. There are no signals on any of the chowks and no available urban bus or van services. Mostly motorcycle rickshaws or auto rickshaws are being used as urban transport services on all roads.

Sahiwal in the Pak-China Economic Corridor

160. The Pakistan-China Economic Corridor (CPEC) is an ongoing mega project that aims to connect Gwadar Port in southwestern Pakistan to China’s autonomous northwestern region of Xinjiang, via a network of highways, railways and pipelines

that transport oil and gas. Other than the transport infrastructure, the economic corridor will provide Pakistan with telecommunications and energy infrastructure.

161. Sahiwal lies within this corridor and, thus, would be a direct beneficiary. In this corridor, two coal power plants are to be built in Qadirabad, which is located on Multan Road (N5), around 19 km from Sahiwal, in the direction of Lahore. Work on this project has already begun; it will generate 1,320 MW of electricity and be completed in 30 months, with China's assistance.

4.4 Social Resources

162. Sahiwal is a predominantly rural district, with only 16.9% (almost half of the provincial and national average) of the population living in an urban environment. Sahiwal City experienced rapid urban growth between 1951 and 1998, during which time the population increased from 50,185 to 208,778. The projected population in 2016 is 294,005. Migration from rural to urban areas has declined considerably in recent years. [5]

163. The majority of households (85%) own their own homes and the same percentage of houses are are made of baked bricks with reinforced cement concrete (RCC) rooves. The city has 29 regularized katchi abadis (squatter settlements) comprising 8,697 houses. The three marla low-cost government housing project is only half constructed. Many new housing colonies were planned nearly 10 years ago, but development and construction have not yet begun. Sahiwal City is comprised of 10 urban union councils. With the establishment of the municipal corporation in the near future, this will increase to 12.

164. Both public and private educational institutions exist in the city. The male literacy rate is 82% and the female rate is 71%. The primary school net enrolment ratio is 91 for boys and 82 for girls. Within the district, approximately 10.3% of children are not enrolled in school. Public and private sector health facilities are available in the city. According to one survey, 45% of household have a monthly income of PRs 30,000 or less. Unemployment is reportedly high, particularly for educated men. There are about 43 units in the small industries estate within municipal limits which provide employment to over 1500 workers.

165. Sahiwal district has witnessed poverty reduction in the past decade. Various studies report the percentage of the population below the poverty line as being in the range of 16% to 32% in urban areas of Sahiwal district. According to the Planning

[5] https://www.urbanunit.gov.pk/Upload/ProjectDocument/PASDP%20Sahiwal.pdf

Commission of Pakistan, 30.8% of the population was facing multidimensional poverty in the district in 2015.

4.4.1 Employment and Unemployment

Unemployment

166. The unemployment rate is measured as the ratio of those laid off and seeking employment, and the total number of unpaid family helpers to the total number of those employed among the economically active population. This number is generally represented as a percentage. In 1998, the unemployment rate in the district was 20.6 percent, which was mainly due to unemployment among males, which represented 20.9 percent, while the female unemployment rate was only 2.8 percent, because of the small number of women active in the labor force. The unemployment rate was slightly low in rural areas, as compared to urban areas, representing 20.2 percent and 22.5 percent, respectively.

Employment Status

167. The last formal, detailed employment statistics for Sahiwal date to the 1998. The population census is quoted in several publications, including the Sahiwal Urban Profile, 2010. A number of related and more current employment figures that are indicative of Sahiwal's urban situation include:

168. The labor force participation in Punjab of 55.4 percent, which is the highest of all four provinces. Industry engages 23.9 percent of the formally employed.

169. In 2013, there were 220 reported factories in Sahiwal District, employing approximately 8,200 workers. Of these workers, 76.5 percent participated in the informal economy. Based on statistics of other employment sectors, this suggests that a proportion of those formally employed also engage in informal economic activity, a situation that is common in most emerging economies. Approximately 26 percent were employed as service workers, in shops and as market sales workers. Another 27 percent were employed as in crafts and related trades. Approximately 14 percent were employed as unskilled workers. Just over 6 percent were employed as professionals. Another 6 percent were employed as plant machine operators. The main source of formal employment is 220 factories, of varying size, located in Sahiwal and its environs. These provide some 8,200 jobs. Agro-related industry is of particular importance as an employment generator.

4.4.2 Educational Services

170. Sahiwal has a number of higher post-secondary educational institutions, including:

- Thirteen arts and science degree colleges have over 15,000 students enrolled, including the Sahiwal Medical College and the Government College of Technology
- Four vocational institutes have over 500 students enrolled.
- One technical/polytechnic institute has almost 3,000 students.
- Six commercial training Institutes have over 3,000 students enrolled.

171. Additional institutes of higher education are always desired, particularly those directly targeting the employment needs of local industry. These also become important means of keeping youth from migrating to the major cities.

4.4.3 Health Facilities

172. Sahiwal district has nine hospitals, but with a total number of beds of slightly under 1,300. In addition, there are six regional health centers and 42 basic health units. As in most secondary urban centers, is retaining qualified staff, in both the health and education sectors, is one of the challenges. Staff often migrates to a major city to take advantage of the amenities it offers. The better the overall urban environment, quality of life, and social and economic amenities, the more likely they are to stay.

173. The prevalence of hepatitis B and C is reported at 5%. The 2011 Millennium Development Goals (MDG) Report for Punjab indicated a prevalence of Hepatitis B at 2.4% and C at 7.1% in the district. Participants of all FGD indicated that hepatitis prevalence is highest in Sahiwal City because of water supply contamination. In their opinion, roughly one quarter of the city population was suffering from hepatitis because of contaminated water, highly inadequate waste water disposal and inappropriate solid waste removal.[6]

4.4.4 Harappa Archaeological Site as a Tourist Attraction

174. Harappa is one of the two main cities of the Indus culture, and is located about 20 km west of Sahiwal. It is a major tourist attraction and contains ruins of a fortified Bronze Age city. The city is believed to have had as many as 23,500 people living there as early as 2,500 BC, which can be considered a large population for that time.

[6] https://www.urbanunit.gov.pk/Upload/ProjectDocument/PASDP%20Sahiwal.pdf

175. The Harappa civilization was rediscovered in the 1920s. It was found to have had its own script, urban centers, and a diversified social and economic system. In 1857, the archaeological site at Harappa was partially damaged. Sadly, its current state is not satisfactory.

176. Harappa is generally characterized as having differentiated living quarters, flat-roofed brick houses, and fortified administrative or religious centers. Although copper and bronze were in use, iron was not yet employed. Cotton was woven and dyed for clothing; wheat, rice, and a variety of vegetables and fruits were cultivated; and a number of animals were domesticated, including the humped camel.

4.5 Socioeconomic Condition

177. This section covers the socio-economic conditions of the population that will be directly or indirectly affected by the project. The socio-economic profile focuses on the sources of livelihood, income levels, and accessibility to social services like health, education etc. The socioeconomic survey was divided into a settlement profile and a socio-economic household survey. Residents were interviewed with the help of semi structured questionnaire.

4.5.1 Settlements Profile

178. Social and Cultural Values: The existing community reflects rural culture with its characteristic norms and values. Women do all household work by themselves. Majority of the population follows Islamic tradition. Common food is wheat bread. Yogurt, Lassi and milk are also used. The common dress for males is Shalwar Qameez and for females Shalwar, Qameez and Dupatta/Chadar. Marriages are celebrated in traditional manners.

4.5.2 Conflict Resolution Mechanism

179. The people of the area were found to be loving, caring and hardworking. They reported that for petty conflicts resolution, they involve the influential people, Nazim or Naib Nazim or Councilor of the village, who after listening statements of both the parties, tries to reach to an unbiased decision which is acceptable to the aggrieved. Generally, the people accept the decisions of the influential.

4.5.3 Public Health

180. The major diseases that afflicted the residents of the village are seasonal. There are no adequate health care facilities in the surveyed settlements. Rural Health Centre and Basic Health Unit (BHU) are 4 to 5 km away from settlement. There is no qualified doctor

in the surveyed settlement. The only medical services in the village are provided by Lady Health Workers (LHW).

4.5.4 Cultural and Religious Resources

181. Religious sites include shrine, mosques, graveyards and historical buildings. There are ten mosques, one shrine, five graveyard, four imam bargah and three church in the area. Mosque has been built in the recent past and has no historical or architectural significance. Shrine is regarded as a sacred place and receive devotion from the locals of nearby populations but is not well known outside the area.

4.5.5 Religion

182. The main religious groups in the area are Muslims and Christians. The population of the surveyed settlement is predominately Muslims i.e., 98% followed by Christians 2%.

4.5.6 Language Spoken

183. Punjabi is the most common language spoken by majority of population in the area. Urdu is spoken as secondary language.

4.5.7 Castes and Minority Groups

184. The project area is inhabited by the people of various castes including Bhutta, Bhatti, Mughal, Rajpoot, Araen, Rae, Sayyed, Malik, Dogar, Rajpoot, Rana, Jat, Rehmani and Chaudhry. Among all these, Araen is the dominant caste. Reportedly, lower castes associated with hereditary menial professions are also the part of the village population.

4.5.8 Educational Status

185. Educational facilities in any area predict the educational level and the interest of the people towards the education. Educational status of the respondents of surveyed village is shown in **Table-4.18**. This table shows that 149 children having age group of 1-3 have been excluded. Out of remaining, majority of the respondents had middle level education. It is also obvious from the table that the ratio of the masters is very low as compared to those having education up to primary, middle and matriculation.

Table 4.17: Educational Level of the Respondents

Education Level	Male	Female	Male (%)	Female (%)
Primary	115	103	21	25
Middle	130	127	24	31

Matriculation	118	24	22	6
Intermediate	51	22	9	5
Graduation	34	16	6	4
Masters	08	14	2	3
Deeni Taleem	04	08	1	2
Illiterate	78	99	15	24

Source: Socio economic Survey, February 2017

4.5.9 Economic Conditions of the Study Area

186. Occupations and Employment: Various income generating activities are practiced in the village. Apart from the categories of housework and students, which mainly pertains to the house wives and children, the major earning occupations are business and private servant. Residents of the village are also engaged with the small industries as skilled or unskilled labor.

187. Based on the sample-based socio-economic survey of the project area, **Table-4.19** presents distribution of the household members by occupation.

Table 4.18: Distribution of Household Members by Occupation

Occupation/ Source of Income	Number	%age
Agriculture	33	03
Housewives	248	23
Domestic Work	33	03
Students	302	27
Wage labor	67	06
Business	77	07
Private Servant	69	06
Government Servant	62	06
Retired Servant	11	01
Unemployed	18	02
Overseas	37	03
None	11	01
Babies	132	12
Total	**1,100**	**100**

Source: Socio economic Survey, February 2017

188. Income Levels: The **Table-4.20** shows the distribution of households with respect to their reported average monthly household income. It is evident from the table that the

income level of most of the respondents is reasonable and economic conditions are well off.

Table 4.19: Distribution of Households by Average Monthly Household Income

Income Group	Number	%age
<10,000	11	08
10,001-20,000	52	35
20,001-30,000	30	20
30,000+	54	37
Total	**147**	**100**

Source: Socio economic Census Survey, February 2017

189. Housing Characteristics: Housing condition is an important indicator for determining the economic conditions of the population as it reflects the financial position and living standards of the inhabitants. Most of the houses in the study area are built with cement and bricks and permanent roofing structures. All the respondents (100%) are living in their own houses and none was found to live in the rented house. Nature of the housing conditions of the study area is shown in **Table-4.21**.

Table 4.20: Housing Type

Categories	Number	%age
Pucca (bricks, cement)	127	86
Katcha (bricks, mud)	-	-
Semi Pucca (bricks, cement, mud)	20	14
Total	**147**	**100**

Source: Socio economic Survey, February 2017

190. Livestock: In the surveyed settlement, livestock is normally raised for food and farming purposes. Livestock has market potential and is sold at the time of need. Major livestock of the area are cows, buffalos, goats, sheep, donkeys and poultry birds. Poultry birds are only kept for meeting the household's eggs and meat requirements.

Description of Environment Sialkot

4.6 Physical Resources

4.6.1 Sialkot City Geography

191. Sialkot city is the thirteenth largest city in the Punjab Province of Pakistan and it is the ninth largest district of Pakistan and encompasses over an area of 745,269 acres (3,016 km^2) with population of about 3.9 million based on Population and Housing Censes, 2017. Whereas, a total 0.7 million are currently residing in Municipal Corporation (MC) Sialkot. Sialkot city is located at 32°29′33″N 74°31′52″E and is 256 m (840 ft) above mean sea level. The district is shown in **Figure 4.1** below.

192. Sialkot district is bounded on the north-east by the Jammu & Kashmir state, on the north-west by rivers of Ravi and Chenab, which separate it from the Gujrat district, on the west and southeast by Gujranwala and Narowal district respectively. It is an irregular tract occupying the sub-mountainous portion of Rachna. It is divided in four sub-divisions i.e. Sialkot, Daska, Pasrur and Sambrial. The district is a plain, sloping down from the uplands at the base of the Himalayas to the level country in the south.

193. Sialkot is one of the few cities of Pakistan where dry port was established in 1984 and export processing zone (EPZ) was developed in 1995. Sialkot has 8,100 industrial units which make it the fourth largest manufacturing hub. Sialkot is the second largest surgical instrument manufacturing city in the world. It is the third largest sports manufacturer in the world and ranks first in Asia. Sialkot is the sole city in Pakistan in which private airport was developed, having the longest runway. The water and sanitation systems are being managed by Municipal Corporation (MC).

Figure 4.8: Location of Sialkot

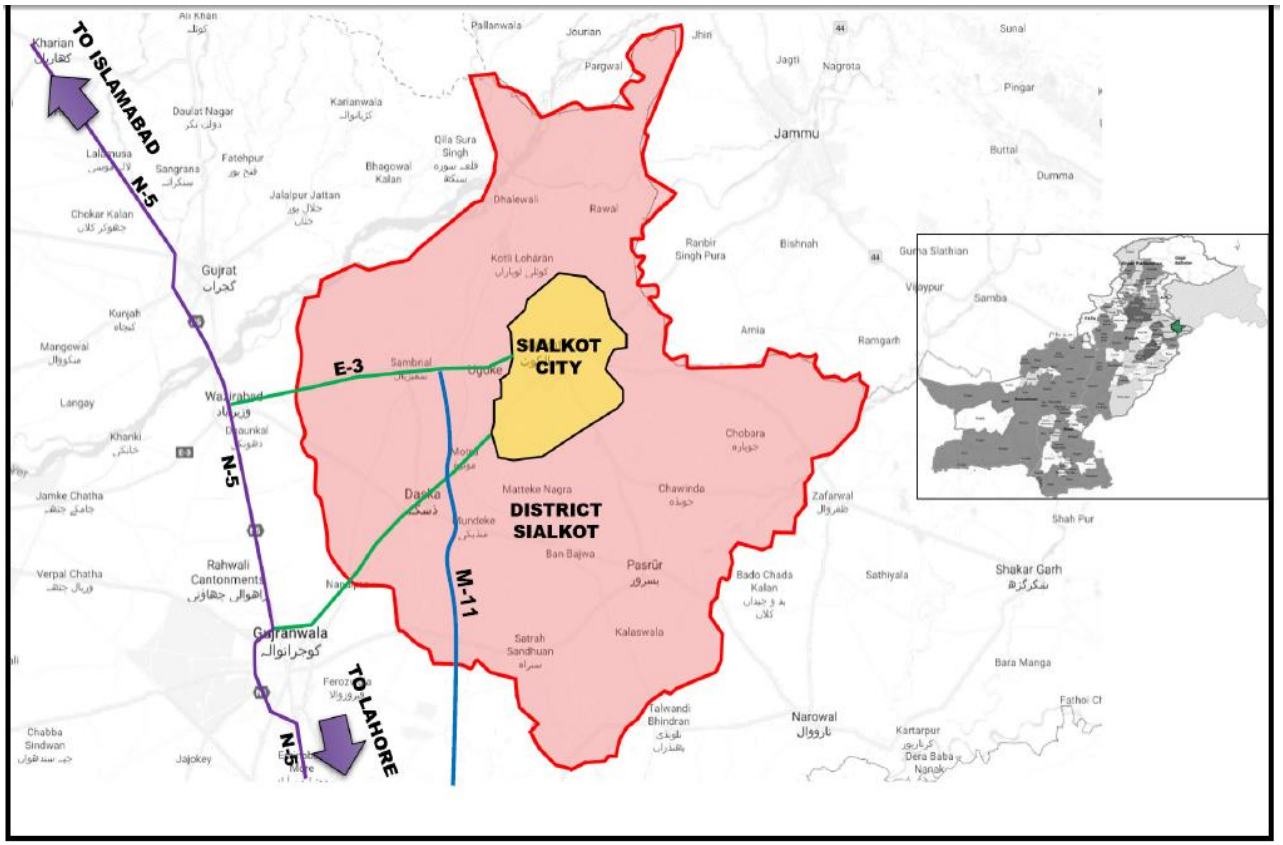

4.6.2 Natural and Climate Conditions of Sialkot

194. Sialkot has the same basic natural and climatic conditions that prevail in Punjab. The climate in most of the area is arid to semi-arid, characterized by four district seasons in a year: winter from mid-November to February; spring from mid-March and April; summer from May to mid-September; and autumn from mid-September to mid-November.

195. The maximum temperatures in summer are 41°C whereas minimum temperature in winter is 5.7°C. The average annual temperature in Sialkot is 23.6°C as can be seen in the **Table 4.20** below.

Table 4.21: Sialkot Climate Data

	Jan	Feb	March	April	May	June	July	Aug	Sept	Oct	Nov	Dec
Avg Temperature (°C)	12.1	14.8	20.1	25.8	31	33.6	30.9	29.5	29	25.1	18.5	13.3
Min Temperature (°C)	5.7	8.1	13.3	18.4	23.1	26.6	26.2	25.3	23.6	17.8	10.5	6.1
Max Temperature (°C)	18.5	21.6	26.9	33.2	38.9	40.7	35.6	33.8	34.4	32.4	26.5	20.5
Precipitation / Rainfall (mm)	46	40	41	20	16	61	134	252	114	18	8	22

196. The average monthly rainfall in Sialkot is shown in **Figure 4.6** below. It can be observed that the highest volume of rainfall is received during the month of July.

Figure 4.9: Average Monthly Rainfall in Sialkot District

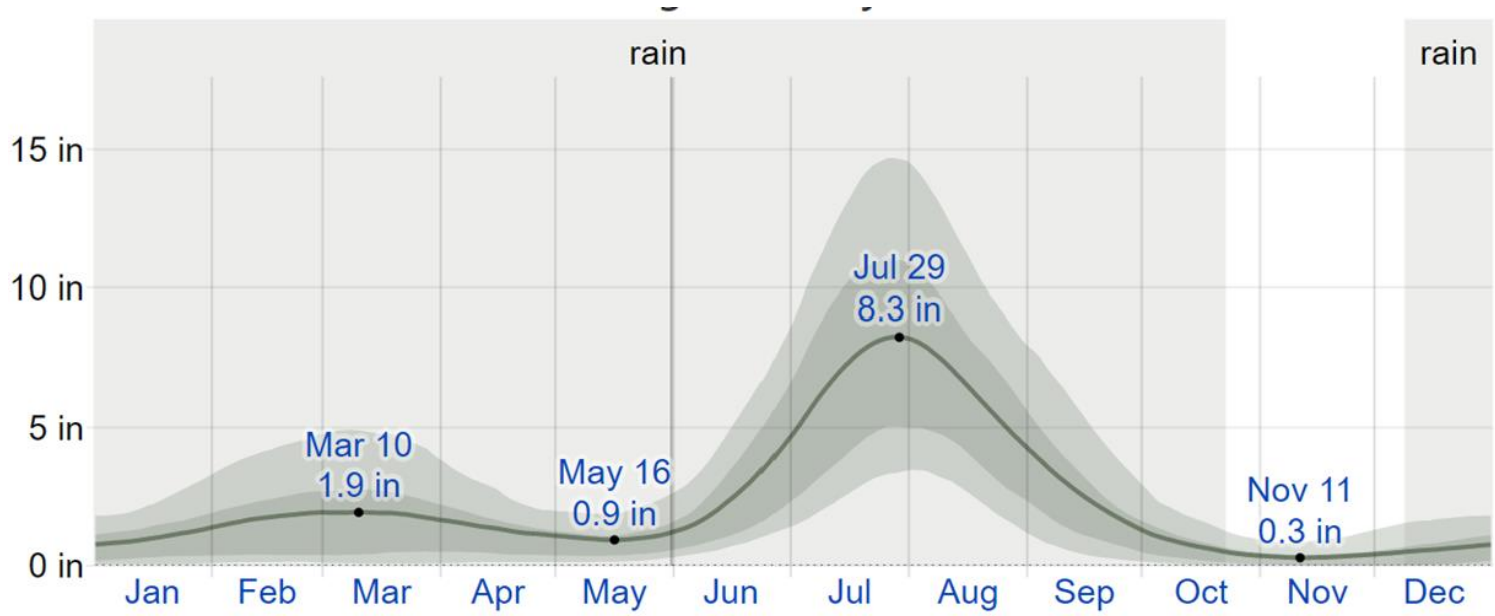

4.6.4 Humidity

197. As can be observed in **Figure 4.7** below, it gets very humid during the months of July to September while the winter months are quite comfortable in terms of levels of humidity.

Figure 4.10: Average Humidity Levels in Sialkot District

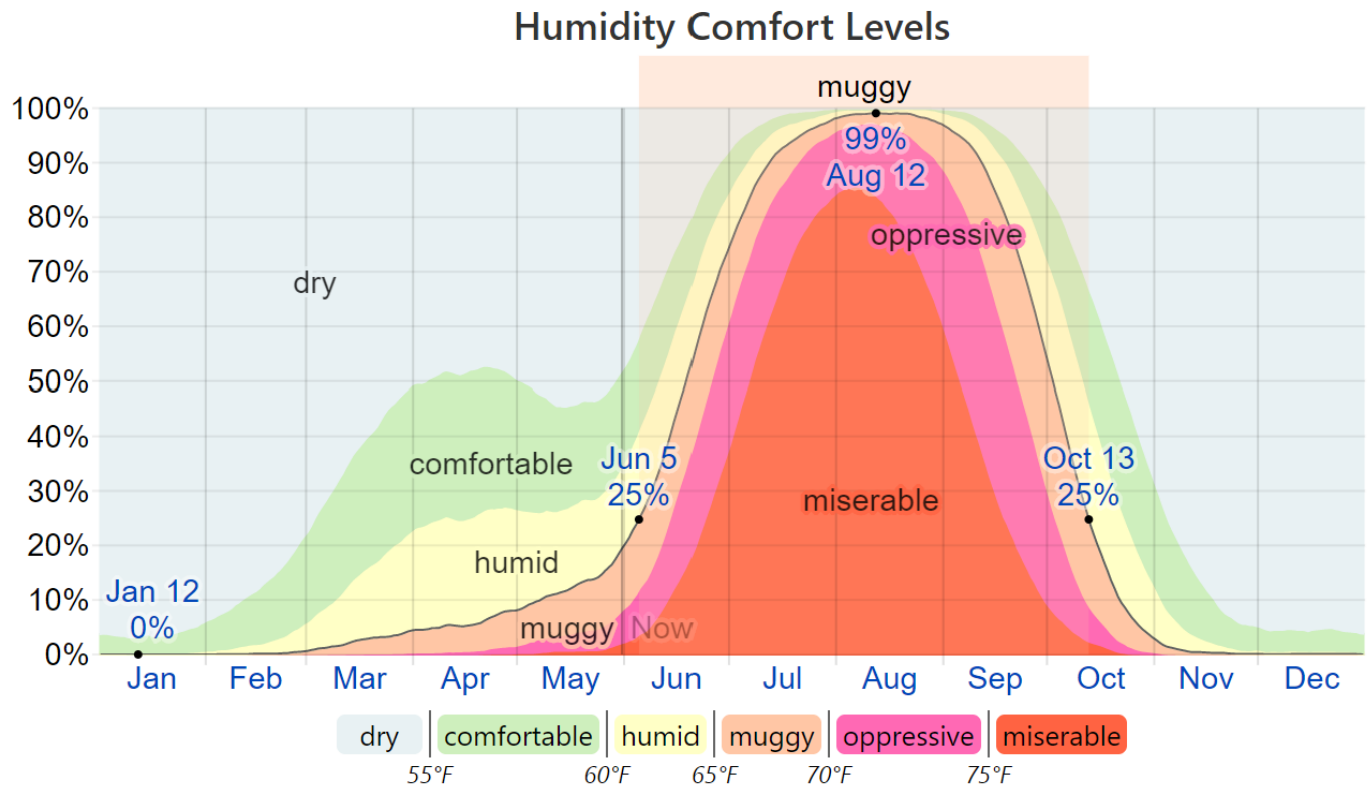

Figure 4.11: Average Wind Speed in Sialkot

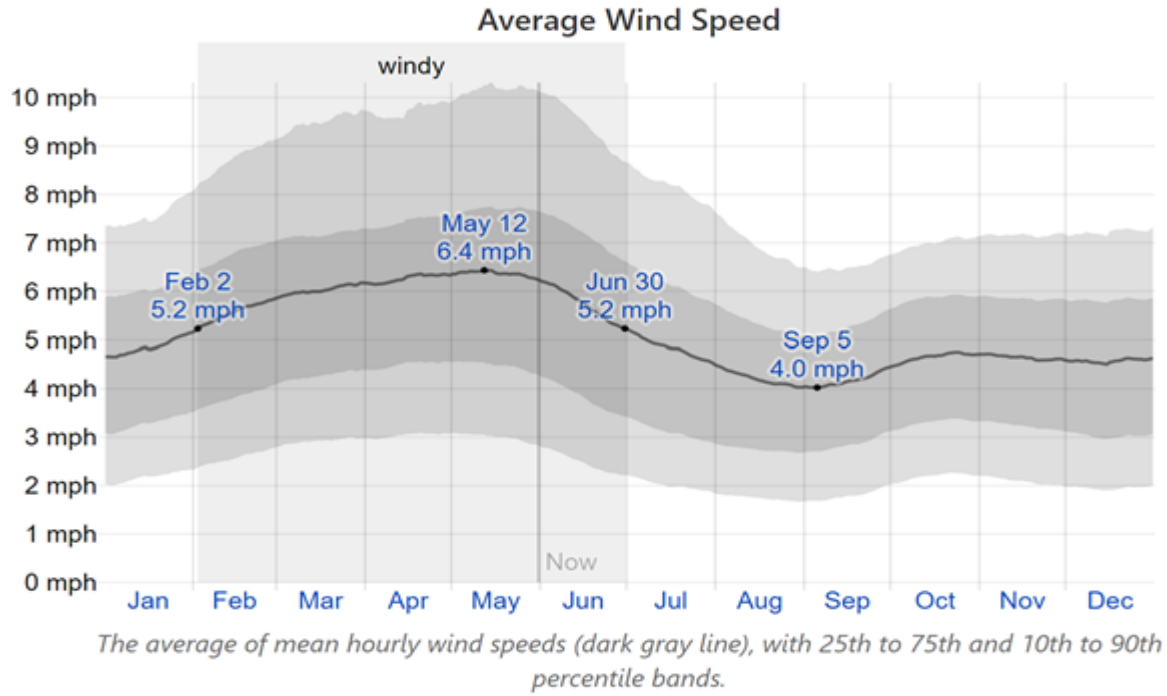

Figure 4.12: Average Wind Direction

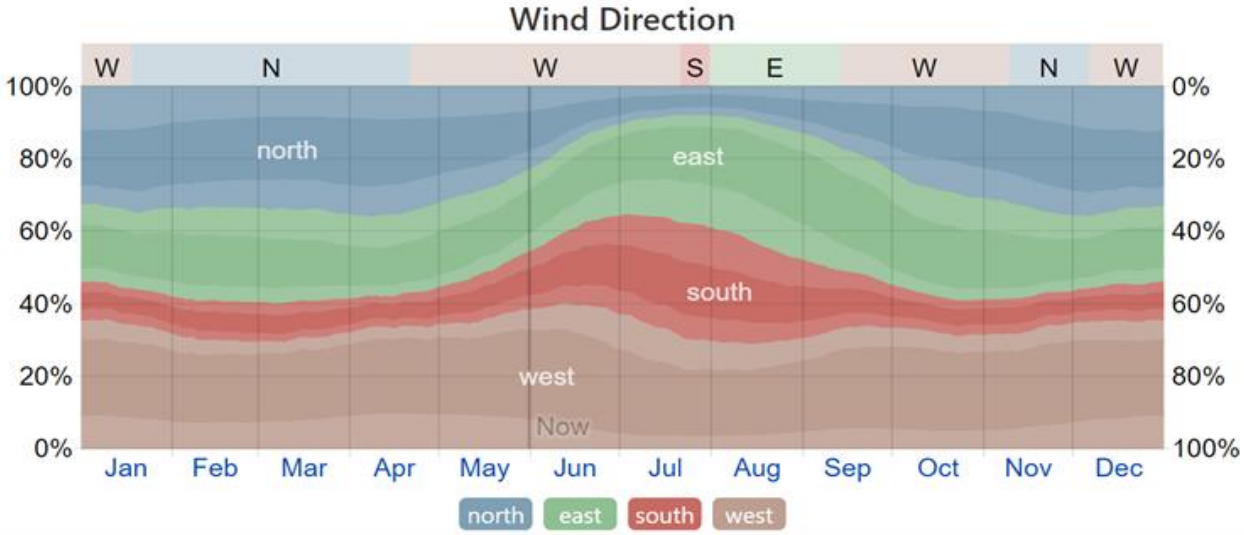

4.6.6 Ambient Air Quality

199. Ambient air quality was continuously monitored for 24 hours at Mubarrk Pura and Allama Iqbal Town, Sialkot

200. Both these locations, shown as **Figure 4.9** below, were selected since they are representative of the airshed in the project areas.

201. The ambient air quality in the project areas is presented in **Tables 4.21** and **4.22** below. As can be observed, the airshed is generally of good quality except for PM_{10}, which is exceeding the applicable standard with 76 ug/m^3 at Mubarak pura and 82 ug/m^3 at Allama Iqbal Town. The detailed ambient air quality results are provided as **Annexure H**.

4.6.7 Noise Levels

202. The ambient noise levels were also monitored at the same locations as ambient air quality i.e. Mubarak Pura and Allama Iqbal Town in Sialkot. The results of the noise monitoring are provided in **Table 4.23** below. As can be observed, the averaged noise levels for the two locations resulted in daytime noise levels of 55.2 dB, which is within the applicable day time standard of 65 dB. In comparison, the nighttime noise limit is also not being exceeded with average night time noise levels assessed to be 44.8 dB.[8] The detailed ambient noise quality results are provided as **Annexure H**.

[8] Results might be misleadingly low and thus inaccurate, considering the minimized traffic and movement of goods and people due to the COVID-19 pandemic from the 'business as usual' scenario.

Figure 4.13: Map of Monitoring Location Sialkot

Table 4.22: Ambient Air Quality Monitoring Results (24 hrs) at Two Locations in Sialkot and Comparison with Standards[99]

Monitoring Location	Parameter	NO (ug/m³)	NO_2 (ug/m³)	CO (mg/m³)	SO_2 (ug/m³)	NOx (ug/m³)	$PM_{2.5}$ (ug/m³)	PM_{10} (ug/m³)	O_3 (ug/m³)
Mubarak Pura	Average	6.78	15.55	0.28	11.76	22.33	22	76	16
Applicable Guideline (IFC)		**-**	**80**	**-**	**20**	**-**	**25**	**50**	**130**
Allama Iqbal Town		13.26	15.52	0.27	11.84	28.78	21	82	11
Applicable Guideline (IFC)		**-**	**80**	**-**	**20**	**-**	**25**	**50**	**130**

Source: WELCOS, Jan 2021.

'Exceeding' applicable guidelines for acceptable pollutant levels **'Within' applicable guidelines for acceptable pollutant levels**

[9] [9] Results might be misleadingly low and thus inaccurate, considering the minimized traffic and movement of goods and people due to the COVID-19 pandemic from the 'business as usual' scenario. Based on comparison with secondary data obtained during the pre-COVID-19 lockdown period, the results appear consistent, even though ambient concentrations of certain parameters are slightly lower. The PM10 levels are lower at present than the pre-lockdown period, however, they are still exceeding the applicable guidelines.

Table 4.23: Ambient Noise Monitoring Results (24 hrs) at Two locations in Project Area

Monitoring Location	Parameter	Noise Reading Results	Noise Guideline (Commercial Area)	Compliance Status for Commercial Areas
Day Time Readings (0600 to 2200)			**Day time**	
Mubarak Pura	dB(A) Leq	**55.2**	65	
Allama Iqbal Town	dB(A) Leq	**53.5**	65	
Night Time Readings (2200 to 0600)			**Night time**	
Mubarak Pura	dB(A) Leq	**44.8**	55	
Allama Iqbal Town	dB(A) Leq	**46.2**	55	
Mubarak Pura Average Noise Levels (24 hour average)	dB(A) Leq	**50.0**		
Allama Iqbal Town Average Noise Levels (24 hour average)	dB(A) Leq	**49.85**		

Exceedance from applicable guidelines

'Within' applicable guidelines

4.6.8 Seismicity

203. Pakistan lies in a seismically active zone. Seismic observations indicate that hundreds of shocks occur in the region every year. According to the seismic zoning map of Pakistan, included in Pakistan Building Code Seismic Provisions (2007), the project area falls under seismic zone 2A, with a peak horizontal ground acceleration of from 0.08 to 0.16. The seismic zoning map of Pakistan is given as **Figure 4.10** below.

Figure 4.14: Seismic Zoning Map of Pakistan

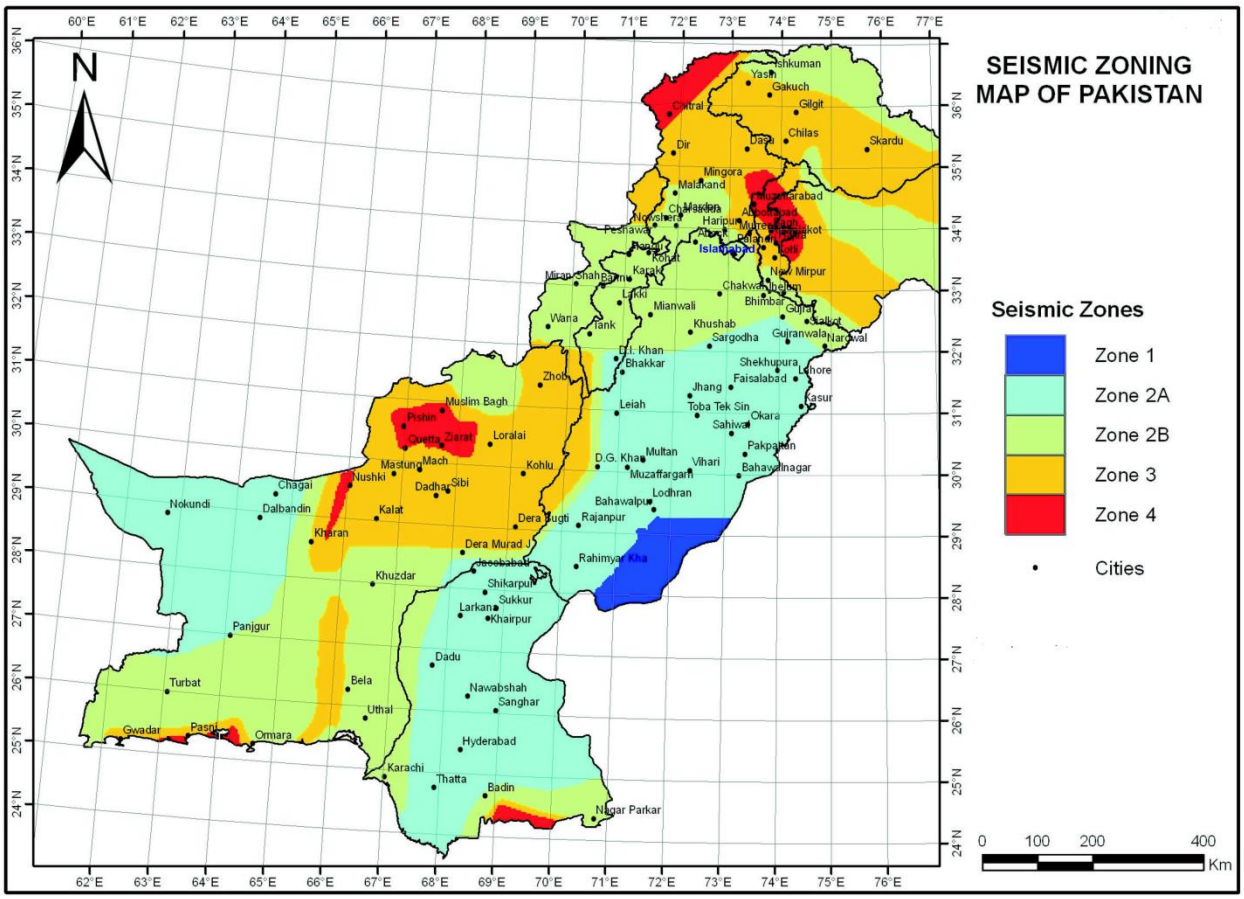

4.6.9 Surface Water

204. River Chenab is the main nearest source of surface water for Sialkot City. Marala Barrage is the nearest structure to Sialkot on River Chenab. The Barrage is located 23 km towards North East from Sialkot city. It is 16 km from the foothills of Pir Punjab Range where it enters the plain lands near Ahknoor. Upper Chanab Canal (UCC) and Marala Ravi (MR) Link Canal take-off from Marala Barrage and cross the

Sialkot City from the north-west. Similarly, some natural nullahs are also passing through the Sialkot.

4.6.10 Groundwater

205. Groundwater underlying the project area occurs under water table conditions. The aquifer mainly comprises sand with clay lenses of varying thickness and extension at places. The previous studies and behavior of existing shallow and deep tube wells in the area reveals aquifer as a single homogeneous water body. Groundwater is available at shallow depth and is being extracted through hand pumps, shallow and deep tubewells for drinking, agriculture and industrial use. In order to have an idea of groundwater potential of the project area.

206. The groundwater quality results were examined that is being used for drinking purpose and for insight into the elevated concentrations of specific elements in the water samples. Any groundwater contamination in the area, being the aquifer as a single homogeneous water body, may create serious environmental and health problems. Therefore, in addition to the physical parameters, of particular interest was to determine if the bacteriological parameter (Total Coliform) exceeds the standard limit. All the parameters tested are within the permissible limits of PEQs and test reports are attached as **Annexure-H**.

4.7 Ecological Resources

4.7.1 Flora of the Area

207. In Sialkot district, the most important species of trees are Kikar (*Acacia Arabica*); Shisham or Tahli (*Delbergia sissoo*); Beri (*Zizyphus jujube*); Toot (*Morus alba*); Sharin (*Albizzia lebbek*); Dherek (*Melia azeharach*); Phulai (*Acacia modesta*); Pipal (*Ficus religiosa*); and Bohr (*Ficus bengalansis*), which are planted for shade. The trees in Rakhs mainly consist of three species: Jand (*Prosopis spicigera*); Karir (*Capparis aphylla*); and Wan (*Salvadora oleoides*). Occasionally, Rero (*Acacia ieucophhloea*) and Farash (*Tamarix articulata*) are also found. The Pilchhi (*Tamarix dioica*) is found on moist sandy soils along riverbanks and is used for wicker work, and basket making, etc. Mesquite bushes and some Eucalyptus trees grow wild in the areas along the canals, roads and barren land, but natural forest cover has been significantly reduced.

208. Sialkot is a green and fertile town with 11,522 forested acres. The area's main crops are wheat, cotton, sugarcane, maize, sorghum forage and rice. Main fruits grown are citrus, mangoes and guava.

209. Flora: The climate tends to have hot, sometimes extremely hot, summers and mild warm winters. The soil and climatic characteristics support short or scrubby vegetation which can be termed as open and pronouncedly of xerophytic nature in which thorny leguminous species predominate. However, commonly found vegetation (Trees, Shrubs, Grasses) of project as well as study area include species given in the **Tables 4.24** to **4.26** below.

Table 4.24: Name of Trees

S. No.	Common Name	Scientific Name	IUCN Status
1	Kikar	*Acacia nilotica*	NA
2	Shisham	*Dalbergia sisso*	NA
3	Simal	*Bombax ceiba,*	NA
4	Sufeda	*Eucalyptus species*	NA
5	Frash	*Tamarix articulate*	NA
6	Neem	*Azedarachta indica*	NA
7	Jaman	*Syzygium cumini*	NA
8	Bakain	*Melia azedarach*	NA
9	Ber	*Zyziphus mauritiana*	NA
10	Toot	*Morus alba*	NA
11	Lasura	*Cordia myxa*	NA
12.	Sukh Chaen	*Pongamia glabra*	LC
13.	Mesquite	*Prosopis juliflora*	NA
14.	Date Palm	*Phoenix dactylifera*	NA

NA= Not Assessed LC= Least Concern

Table 4.25: Name of Shrubs and Herbs

S. No.	Common Name	Scientific Name	IUCN Status
1	Akk	*Calotropis procera*	NA
2.	Phog	*Calligonum polygonoides*	NA
3	Jantar	*Sesbania aculeate*	NA
4	Bathu	*Chenopodium botrys*	NA
5	Lana	*Suaeda fruticosa*	NA
6	Arind	*Ricinus communis*	NA
7	Piazi	*Asphodelus tenuifolius*	NA

NA= Not Assessed

Table 4.26: Name of Grasses

S. No.	Common Name	Scientific Name	IUCN Status
1	Khabbal	*Cynodon dactylon*	NA
2	Dab	*Desmotachya bipinnata*	NA
3	Khawi	*Cymbopogan jwarancusa*	NA
4	Kana	*Saccharum munja*	NA
5	Gorkha	*Elionorus hirsutus*	NA
6	Kai	*Saccharum spontaneum*	LC

NA= Not Assessed, LC= Least Concern

210. Existing Trees: The project area is flat agricultural land which supports trees of various species on the boundary of agricultural fields as well as individually scattered growth. Trees (girth 61 cm and above) and pole crop (girth 20 to 58 cm) standing within the project area were enumerated along with their kind of species. The detail of trees present in the project area is given in **Table-4.27** below.

Table 4.27: Species Wise Tree Distribution

Sr. No.	Species	No. of Trees		
		Poles (girth 20 to 58 cm)	Trees (girth 61 cm and above)	Total
1	Kikar	5	12	17
2	Shisham	8	10	18
3	Toot	7	13	20
4	Miscellaneous	5	7	12
	Total	**25**	**42**	**67**

Miscellaneous includes Sukh Chaen, Lasura, Jaman, Neem, Date Palm

4.7.2 Fauna of the Area

211. The faunal habitat is quite modified with several species of wildlife having adapted to the changed habitat. These include, Bengal fox; small Indian mongoose; shrew; hog deer; wild hare; and rodent pests, including porcupine; fruit bats; and wild boar. The avifauna that has survived the modified habitat include doves; black partridge; cuckoos; koel; woodpeckers; parakeets; bulbuls; babblers; black drongo; bee eaters; finches; owls; hawks; and house sparrow. The reptilian species of this modified habitat include krait; cobra; saw scaled viper; rat snake; and monitor lizard.

212. Scavengers, such as, jackals are attracted to garbage dumps and human faeces for food. House sparrows breed in houses. Bank mynas and cattle egrets feed on grasshoppers that are present in the rangelands that also support cattle and buffalos. Banyan and peepal trees still grow in the villages. Green pigeons and barbets feed in these trees.

213. Some of the oldest trees still stand in the old British-era colonies. Some rare species of birds, such as hornbills, green pigeons, and barbets still live on these trees. Large populations of pigeons breed in urban houses. Kites, crows, mynas, house sparrows and alexandrine parakeets breed in urban areas. Shisham and acacia trees are usually planted along the roads and canals. Doves mainly breed on these types of trees.

The extent of fauna presence is related to the availability of vegetative cover in an area. Since the project area is basically agricultural supporting chunk of land without any dense forested area nearby, it lacks richness in natural fauna. No conspicuous wildlife was observed in the area during field visit However, mammals reported in the project area, are given in **Tables 4.28** to **4.30** below.

Table 4.28: Names of Mammals

S. No.	Common Name	Scientific Name	IUCN Status
1	Jackal	*Canis aureus*	LC
2	Fox	*Vulpus bengalensis*	NA
3	Porcupine	*Hystrix indica*	LC
4	Squirrel with strips	*Funambulus pennanti*	NA
5	Mouse	*Mus musculus*	LC
6	Mongoose	*Herpestes auropunctatus*	NA
7	Indian Hare	*Lepus nigricollis*	LC

NA= Not Assessed, LC= Least Concern

Table 4.29: Names of Reptiles

S. No.	Common Name	Scientific Name	IUCN Status
1	Cobra	*Naja naja*	NA
2	Spiny tailed Lizard	*Uromastyx hardwickii*	NA
3	Fringed Toed Lizard	*Acanthodactylus cantoris*	LC
4	Indian Krait	*Bungarus caeruleus*	NA

Table 4.30: Names of Amphibians

S. No.	Common Name	Scientific Name	IUCN Status
1	Common Frog	*Rana tigrina*	LC
2	Common Toad	*Bufo bufo*	LC

214. The area is comparatively dry and does not support wide variety of birds. The common species found in the project area are enlisted in **Table-4.12** below.

Table 4.31: Names of Birds

S. No.	Common Name	Scientific Name	IUCN Status
1	House Sparrow	*Passer domesticus*	LC
2	Mynah	*Acridotheres tristis*	LC
3	House Crow	*Corvus splendens*	LC
4	Pigeon	*Columba livia*	LC
5	Koel	*Eudynamys scolopacea*	LC
6	Red-Wattled Lapwing	*Vanellus indicus*	LC
7	Gray Partridge	*Francolinus Pondicerianus*	LC
8	Quail	*Coturnix coturnix*	LC
9	Red Vented Bulbul	*Pycnonotus cafer humayuni*	NA
10	Little Bittern	*Ixobrychus minutus*	LC
11	Hoopoe	*Upupa epops*	LC
12	Ring Necked Dove	*Streptopelia decaocto*	LC
13	Little Egret	*Egretta garzetta*	LC

215. On account of anthropogenic interventions mainly agriculture, no habitat is left to support much of wildlife in the project area. None of the existing species of plants or animals, therefore, are of endangered category.

216. Fisheries: Fishery sector is not rich in district Sialkot on account of precious fertile land for agriculture production.

4.7.3 Protected areas / National Sanctuaries

217. In Pakistan, there are several areas where land is devoted to the preservation of biodiversity, through the dedication of national parks and wildlife sanctuaries. There is no protected area or national sanctuary near the area of where work will take place.

4.8 Socioeconomic Development

218. Sialkot is located close to the Indian border some 125 km north of Lahore. It is a major industrial center, specializing in leather products, surgical instruments, diesel engines, pharmaceuticals, steel rolling mills, textiles and sports goods. There are at least 264 tanneries, 244 leather garment producing units, 900 leather sports goods producing units, 57 rice husking mills and 14 flour mills in the city.

219. The history of industrialization of Sialkot is very old. The Damascene craftsmen of Sialkot (koftgars or koftars) were famous during the Mughal era for their fine swords and daggers. Papermaking in Sialkot dates back to the time of the Mughal Emperor Akbar which was famous all over the world. Brick making was another historic skill of the people of the Sialkot and those bricks were known as the "Sialkoti Bricks" throughout South Asia. Most of the states in the South Asian region relied on the slender but strong Sialkoti bricks lanateer for the erection of forts, castles, monuments, public buildings, infrastructure construction, etc.

220. Nowadays, Sialkot is famous all over the world because of its sports equipment and Surgical Instruments manufacturing industry. The most successful sports manufacturing firms now have international collaborations with the well-known sports brands like Adidas (Germany), Puma (Germany), Nexo Sports (Canada), Nike (USA), Dita (UK), Mikasa Sports (Japan) and Slazenger (UK). In the recent past, however, lack of modernization and allegations of child labor usage have resulted in a loss of market share to the new entrants in the business-like Thailand, Korea and China. The Sialkot Chamber of Commerce and Industry has now almost controlled the incidents of child labor usage within the industry with the collaboration of the United Nations (ILO). Most of the companies have adopted the ISO standards.

221. The facilities of a dry port and recently built airport have contributed significantly towards its economic growth and Sialkot is now the third largest economic hub in Punjab after Lahore and Faisalabad. It is commercially linked with the Lahore Stock Exchange through its Sialkot branch, known as the Sialkot Trading Floor (STF). The State Bank of Pakistan and the Export Promotion Bureau of Pakistan has branch offices in Sialkot. After Karachi, Sialkot is Pakistan's second largest source of foreign exchange earnings through its exports and remittances from the overseas manpower. For the past several decades, the manufacturers and exporters of the city have been awarded the annual National Exports Award by the Federation of Pakistan Chambers of Commerce and Industry. Sialkot has an Industrial Estate and an Export Processing Zone. Another Export

Processing Zone is planned along the Sialkot Lahore Motorway. The per capita income of Sialkot is ranked among the highest in Pakistan.

4.8.1 Agriculture

222. Agriculture is the main source of income of the inhabitants of the project area. District Sialkot being the land of river and canals is considered as one of the most fertile land zones of the Punjab. Therefore, due to the most sophisticated canal irrigation system and supporting ecological and climate characteristics, this area has a good potential for producing almost all kinds of food commodities. The area has a diverse cropping pattern because of its heterogeneity in agro-climatic conditions. The main agricultural crops, fruit trees and vegetables grown by the farmers of the area are given below.

223. **Main Crops:** Wheat, rice, maize and sugarcane are the main crops grown in the area. Besides guar seed, bajra, moong, mash, masoor, jawar, oil seeds are also grown in minor quantities in Sialkot area. Average yield of important crops in the area of study is given below in **Table 4.32** below.

224.

225. **Table 4.32: Average Yield of Agricultural Crops**

Sr. No.	Crop Name	Average Yield/Acre (kg)
1	Sugarcane	20,600
2	Maize (Spring)	3,400
3	Maize (Autumn)	2,800
4	Rice	800
5	Wheat	1,400
6	Potato	9,600

226. **Fruits**:, Guavas and strawberry are the main fruits grown in the district. Besides, pomegranate, litchi, falsa and banana are also raised on minor scale.

227. **Vegetables:** Potatoes, onion, cauliflower, tomato and turnip are main vegetables grown in the area. Besides, peas, garlic, chilies and lady finger are grown on a smaller scale.

4.8.2 Land Use

228. Land uses in Sialkot City are mixed, and in many cases incompatible. Sialkot would benefit from stronger land use controls, to prevent potentially harmful activities from being located near residential areas and vice versa. Sialkot has very few green areas or parks, with the most prominent being Gulshan-e-Iqbal park, off Narowal Road, a park in

the Cantonment and the stadium. There is a need for more open spaces, more space for industrial activities and a betterdefined road network, in both core city and contiguous areas.

229. Eleven arterial roads radiate out from the Sialkot City center and link it with surrounding agricultural areas, other cities and Sialkot International Airport which lies about 20 km to the west of the City Centre. The airport road also connects to the Dry Port and proposed new Tanneries' Industrial Estate. This may become Sialkot's major growth direction.

230. Industries and housing estates have developed in a ribbon pattern along all of the north, west and south radial roads. Agricultural communities close to the roads and to industries are fast becoming urbanized.

4.8.3 Industrial Land Use

231. Industries have developed in a ribbon pattern along all of the north, west and south radial roads, as have housing estates. Agricultural communities close to the roads and to industries are fast becoming urbanized. Whereas industrial land uses within the central city are scattered throughout the area in Wazirabad Road and in the small Industries estates along Haji Pura, Daska, Emanabad, Narowal, Defense, Kullowal roads and north of the Railway Station. Commercial land uses, once concentrated in the area around the fort, are now found in outlying areas such as Defense Rd., Paris Rd., Saddar in the Cantonment and along major roads.

232. There are about 3,000 large, medium and selected small industries in Sialkot District, some located in the central city areas and many along the arterial roads leading out of the city. Together, they employ about 22,300 persons. Industries located along Gujranwala Road include Redo factory, Micro Corporation, Europlus, Saga Sports, Taj Mahal Factory, Phonix Cutlery, Remix Factory, Tata Sports, Motor Bike Apparel, numerous leather goods factories, Awan Sports, Taylon Industries, Pakol Industry and many more. Sambrial Road has significant tanneries along it, particularly between the two canals, east of the Dry Port. On Pasrur Road, there are mixed land uses along the segment closer to Sialkot urban area, but there are many rice mills along the outer segments of this road. There are however no significant developments along Eminabad Road and Zafarwal Road outside urban limits.

233. There is an industrial complex in Sambrial, in vicinity of the airport. This includes an export processing zone, a dry port and a number of industries around it and all along

Wazirabad Road, which passes through Sambrial. These industrial developments, as stated earlier, are near the airport. An industrial estate for tanneries is also proposed near the airport. For this purpose, an area of 155 hectares (384 acres) has been acquired.

4.8.4 Commercial

234. The city has a number of commercial areas including the area immediately north of the Fort. In addition to the older, more traditional areas high-end commercial, financial and related activities have been developed, making the city, once single-centered on the commercial areas around the fort, now multi-cantered.

4.8.5 Settlement Patterns

235. Settlement in Sialkot started with the 5,000-year-old fort on the central hill and has proceeded to expand in a more or less organic, low-rise manner since. The only formally planned part of Sialkot is the Cantonment Area. The traditional rural settlement pattern of tightly developed compact villages, chaks, have had a significant influence on Sialkot's urban form and settlement patterns as they have become absorbed into the main urban area.

236. The dominant and most problematic current settlement pattern is an unplanned and uncontrolled sprawl. This takes three main forms:

- Individual industrial developments, primarily along major traffic arteries;
- Small-scale commercial or individual houses developed in an ad hoc manner, and
- Larger scale "housing societies" where significant sized pieces of land are converted from agriculture to multi-unit private residential development. These again occur without planning approval.

The **Table 4.33** below presents the areas and proportions of various land uses in Sialkot.

Table 4.33: Land Use Distribution in Sialkot

Sr. No.	Land Use	Area		% of Total Area
		Acre	Sq.km	
1	Residential	1836.81	7.44	46.0
2	Commercial	363.44	1.47	9.1
3	Agricultural	169.32	0.69	4.2
4	Public Buildings	151.96	0.62	3.8
5	Religious	38.1	0.15	1.0
6	Education	87.48	0.35	2.2
7	Health	52.05	0.21	1.3

8	Industry	322.36	1.31	8.1
9	Graveyard	91.02	0.37	2.3
10	Parks/Open Spaces	256.13	1.04	6.4
11	Vacant Area	284.52	1.15	7.1
12	Unidentified Parcels	338.0	1.37	8.5

4.8.6 Institutional

237. Institutional land uses are also prominent, in areas such as Katchary Road, Bathania Hospital, Allama Iqbal Memorial Hospital, the WAPDA offices and similar areas.

4.8.7 Transportation

238. Sialkot district is quite developed in roads. All tehsil headquarters, major towns and villages are connected through asphalt roads. The main asphalt road runs from Sialkot to Lahore via Daska-Gujranwala. Sialkot is also connected with Islamabad via Sambrial and Wazirabad. 612 mauzas have asphalt roads, and 606 mauzas have un-metalled roads.

239. With the exception of tehsil headquarters Daska, all other tehsil headquarters are also connected through rail with district headquarters Sialkot. Sialkot district is also served by Wazirabad-Narowal railway line.

240. Sialkot is linked by air with other countries and parts of the country through the Sialkot International airport.

4.8.8 Livestock

241. The population of cattle, buffaloes, sheep and goats was 195, 471, 42 and 137 thousand heads respectively. For poultry, there were 954 broiler, 134 layer and 9 breeding poultry farms, having a rearing capacity of 11,150, 747 and 63 thousand birds respectively. The annual availability of hides and skins is estimated at 536 thousand pieces. There exists a scope for dairy farms, animal/poultry feed and cattle/sheep/goat fattening farms.

4.8.9 Community Dynamics

242. The inhabitants in the sub-project areas fall into socioeconomic strata varying from poor to rich. The inhabitants generally were observed to have access to

clean drinking water from hand pumps and motor operated pumps with the health and sanitation facilities mostly found to be inadequate. Much of the areas are dotted with agricultural fields which support both crop and livestock production, including cattle, goats and sheep. The majority of farmers within the sub-project areas appear to prefer horticulture to traditional agronomic crops. Sugarcane is raised for sugar mills.

4.8.10 Religion

243. The project area consists primarily of Muslim communities with a few minorities residing in peace and harmony. The area has no past record of communal riots or presence of any terrorist activity within the immediate area.

4.8.11 Languages

244. The mother tongue in the area is Punjabi with Urdu spoken as the national language. Majority of the communities possess basic English skills.

4.8.12 Occupations

245. The information regarding major source of income for the inhabitants was collected. According to the survey, 75 percent of population of project area is associated with farming followed by labor work, shop keeping, mobile vendors, employees in private and government sectors, businessman and some of the workforce is working abroad. Moreover, a few families were associated with more than one occupation in the surveyed villages. The survey data indicated that average monthly income from farm and off-farm sources of the households was about Rs.25,645.

246. It was assessed as a result of the survey that 70 percent of the houses of the villages in the project area were Pucca and 26 percent were semi pucca and 4 percent were reported as Kacha.

247. Sialkot has more than 3,000 factories. These provide the majority of employment. This will have a significant impact on present and future Sialkot. The following summary points are of particular interest with respect to the Sialkot District

(specific data for Sialkot urban center is not available, but may be somewhat different given the industrial focus): [10]

- Overall labor force participation is below national average: 45% compared to 53.5 nationally
- Official unemployment rate is 6.6% compared to a national average of 5.3% o Share of employment in the informal sector is close to the national average at 69% for Sialkot compared to 72.9% nationally
- Informal Sector employment comprises:
- 33% in manufacturing
- 16% in construction
- 33% in trade and hospitality, and
- 10% in personal services o Lowest unemployment for all levels of education compared to national averages and other surveyed Districts
- Distribution of employment by major occupation groups is similar to national averages except with respect to "Craft and Related Trades Workers" where Sialkot exceeds all other Districts and at 33.9% is more than double the national average of 14.8%. This clearly reflects Sialkot's unique and historical industrial activity.
- With respect to the sub-sector of "Precision, handicraft, printing and related trades workers" Sialkot excels with 20.2%, almost 4 times the national average of 5.5%, again reflecting Sialkot's unique industries.

4.8.13 Education

248. The literacy rates for males and females are below 40%, which is surprising considering the presence of educational institutions. There has been an increase in literacy in these communities compared to the earlier generations whose literacy rate was considerably lower.

249. Sialkot has a fairly well-developed educational infrastructure that comprises a sub-campus of the Fatima Jinnah Women University, a sub-campus of the Virtual University of Pakistan, 8 Degree Colleges for Women, 5 Degree Colleges for Men, 2 Cadet Colleges, 6 Commerce Colleges, one Law College, one Medical College, one Homeopathic Medical College, one Nursing School, one Para- Medical School, one Poly-Technic Institute, with numerous Inter Colleges, Higher Secondary Schools and

[10] https://www.urbanunit.gov.pk/Upload/ProjectDocument/IEE-Sialkot.pdf

over 250 High Schools. The University of Engineering Sciences and Technology (UEST) was recently established in collaboration with the Royal Institute of Technology, Sweden on the Sialkot Lahore Motorway and will also incorporate the development of a Technology Park.

4.8.14 Health Care

250. At district headquarters Sialkot, there is a civil hospital known as Allama Iqbal Memorial Hospital, a civil Hospital for women, a Mission Hospital, a police hospital, district Jail Hospital and a combined Military Hospital in Sialkot cantonment. There is a civil hospital at each Tehsil headquarters of the district. At Daska, there is an eye hospital. There are tuberculosis clinics at Sialkot and Daska, Allama Iqbal Sialkot hospital and WAPDA dispensaries in Sialkot. Doctors from Gujranwala visit this hospital thrice a week.

4.8.15 Energy Supplies

251. Sialkot city and all villages in the project area are connected to the WAPDA grid. Unfortunately, Sui gas connections are very rare while the remaining communities are forced to use LPG cylinders or firewood. Some poor communities also use cow dung for cooking purposes.

4.8.16 Communication

252. Majority of the community members possess cellular phones. PTCL line is present in the project areas but is not used commonly except in Public Call offices (PCOs). Some youth is IT literate and use desktop computers and have access to the internet. Postal service is available in all villages in the sub-project areas. On special occasions, messages are also conveyed through word of mouth or on mosque loud speakers. Less than 10% of the community members have televisions at home while over 60 percent of the communities use radios to stay updated.

4.9 Archaeological and Cultural Heritage

253. No archaeological or cultural heritage has been observed during the surveys and neither was it reported. However, if at any stage any archaeological or physical heritage is discovered, it shall be managed as per established protocol from the department of Museum and Archaeology, GoP as per the ‘Chance find’ procedures.

254. The old city of Sialkot is a great center of Punjabi culture with many important historical and religious sites and buildings amongst the fascinating labyrinth of narrow streets and crowded bazaars.

255. The centuries-old historical Sialkot fort still remains the victim of un-ending negligence of Sialkot Tehsil Municipal Administration (TMA) and archeology department, as this crumbling ancient fort has illegally been surrounded by the encroachers by raising their encroachments, badly damaging the natural beauty of this fort.

256. Although the offices of Sialkot district government and Sialkot Tehsil Municipal Administration (TMA) are located in this Fort since long, but the Sialkot district government and TMA have never bothered to feel the need of maintenance of this fort, besides, remaining failure in making some direly needed effective measures to preserve and protect this rich heritage for future generation.

5 Analysis of Alternatives

5.1 Overview

257. The discussion and analysis of alternatives considers other practicable strategies that will promote the elimination of negative environmental impacts identified. This section is critical in consideration of the ideal development with minimal environmental disturbance.

258. The report identifies potential environmental impacts of each alternatives, develops comparative analysis matrix with respect to transportation objectives and environmental impacts to suggest the most feasible alternative that can be taken up for development.

259. The following alternatives that have been assessed are as follows:

- Alternative I No Project Option
- Alternative II Structure Analysis

5.2 No Project Option

260. At present, there is no proper and permanent parking place available for the large numbers of solid waste management machinery of Metropolitan Corporation (MC) Sahiwal and Sialkot Waste Management Company (SWMC) in both cities. Both cities are urgently in need of a Parking Sheds facility as presently, solid waste management machinery is being parked on rental place or under the open sky. Absence of permanent parking place can cause machinery deterioration and compromise its safety that will lead to unsustainability of solid waste management system in both cities.

261. It was concluded considering the urgent need for the solid waste management machinery Parking Sheds for Sahiwal and Sialkot, the project must be developed and the 'No Project' option is not viable.

5.3 Structure Analysis

262. Structural alternatives considered for the construction of Parking Sheds are as followed

1. Concrete structure with conventional slab;
2. Concrete structure with canopy slab;
3. Steel structure with tube-sections; and
4. Prefabricated steel structures with fiberglass roofing (butterfly type)

Concrete made structured is conventional construction practice while the prefabricated steel structure construction is quiet advanced method, based on the following economic, environmental and other factors prefabricated steel structure with fiberglass roofing are selected for the construction of Parking Sheds at all three sites.

5.3.1 Prefabricated Steel Structure

- Adaptable
- Economic
- De-mountable & Easy Re-assembling
- Light weight
- Long span for easy manoeuvring of Vehicals
- Small sized columns
- Adequate fire protection
- Maximizes space Usage
- Rapid Construction
- Architecturally appealing
- State of the art Design
- Ductile and earthquake Resistant Frames
- Less construction water required

5.3.2 Concrete Steel Structure

- Higher capital costly
- Higher excavation involve
- Time taking
- Immovable
- Large number of columns required
- Maximizes space Usage
- Dust generation

- Higher water requirement for construction
- Nuisance for the neighboring community for comparatively long term construction activity

5.4 Site Selection for Parking Sheds

263. A detailed site selection survey was conducted in both cities and sites are selected on basis of following factors

- No land acquisition is required, selected sites are government owned land
- Easy accessibility to whole city or service area for vehicles
- Less time required for solid waste management operation due to easy mobility

6 Potential Environmental Impacts and Mitigation Measures

264. The analysis of potential environmental impacts in the umbrella IEE study[11] is generic and does not present any impacts specific to the proposed Parking Sheds in Sahiwal and Sialkot. Thus, this chapter presents a description of the environmental impacts and the proposed mitigation measures to minimize the negative impacts, if any.

265. Impact-screening matrices during each of the project phases i.e. project design, construction and operation are presented below.

6.1 Methodology for impact screening

266. The methodology for assessing the risk level associated with each potential impact is presented below.

267. Risk is assessed as the likelihood that the activity will have an effect on the environment as well as the consequence of the effect occurring. It is often described like this:

Risk = Likelihood × Consequence

Likelihood Scale

Likelihood	Definition	Scale
Certain	Will certainly occur during the activity at a frequency greater than every week if preventative measures are not applied	5
Likely	Will occur more than once or twice during the activity but less than weekly if preventative measures are not applied	3
Unlikely	May occur once or twice during the activity if preventative measures are not applied	2
Rare	Unlikely to occur during the project	1

[11] https://www.adb.org/sites/default/files/project-documents/46526/46526-007-iee-en_0.pdf

Consequence Scale

Consequence	Definition	Score
Catastrophic	The action will cause unprecedented damage or impacts on the environment or surrounding communities	5
Major	The action will cause major adverse damage on the environment or surrounding communities	3
Moderate	No or minimal adverse environmental or social impacts	2
Minor	No or minimal adverse environmental or social impacts	1

Risk Score Table

		Consequence			
		Catastrophic	Major	Moderate	Minor
Likelihood	Certain	**25**	**15**	**10**	5
	Likely	**15**	**9**	6	3
	Unlikely	**10**	**6**	4	2
	Rare	5	3	2	1

Risk: **Significant: 15-25**
Medium: 6-10
Low 1-5

268. Any 'Medium' to 'Significant' risk requires an environmental management measure to manage the potential environmental risk. Judgement will be required concerning the application of an environmental management measure to mitigate low risk situations.

6.2 Design/Pre-Construction Phase

Impact Screening Matrix

269. The 'activity wise' screening of potential impacts during the design/pre-construction phase is provided in **Table 6.1** below.

Table 6.1: 'Activity Wise' Screening of possible Impacts during Design/Pre-Construction phase

S/No.	Potential Impact	Likelihood (Certain, Likely, Unlikely, Rare)	Consequence (Catastrophic, Major, Moderate, Minor)	Risk Level (Significant, Medium, Low)	Residual Impact (Significant, Medium, Low)
1	Lack of integration of IEE/EMP requirements into Construction bid documents	Likely	Moderate	Medium	Low
2	Material Haul Routes	Likely	Moderate	Medium	Low
3	Improper location of worker camps leading to improper disposal of solid waste and sewage and privacy issues for residents in project area.	Likely	Moderate	Medium	Low
4	Contractor's Environmental Safeguards Capacity	Likely	Moderate	Medium	Low
5	Cultural Heritage & Religious Sites, Social	Unlikely	Minor	Low	Low

Critical Risk Level

Significant Risk Level

Medium Risk Level

Low Risk Level

6.2.1 Lack of integration of IEE/EMP requirements into Construction bid documents

Impacts

270. The bidding documents must reflect the requirement to select a qualified and experienced Contractor from the perspective of ensuring implementation of required safeguards during project development.

Mitigation Measures

271. The proposed 'Safeguards unit' that should be developed at the PMU should be assigned the task to check that design and bid documents are responsive to key environmental, social and safety considerations, and that the proposed method of work reflects the boundaries defined in the EMP. The bid documents must include the EMP and its implementation cost must be reflected in the BoQ.

6.2.2 Material Haul Routes

Impacts

272. Hauling of material can have significant impacts on the community, public safety, traffic congestion, air quality and lifespan of the Sahiwal and Sialkot city road ways.

Mitigation Measures

273. The construction vehicles hauling materials along the cities roads and anywhere there are sensitive receptors such as hospitals, schools and/or roadside residences will be limited and the PMU in collaboration with the respective CIU will establish a route plan to minimize this disruption which shall be appended to the EMP.

6.2.3 Contractor's Environmental Safeguards Capacity

Impacts

274. The responsibility of the PMU in collaboration with the CIU is to review and finalize the documents relating to environmental issues. Contractors that do not possess the required capacity for safeguards management do not comply with workplace environmental, social and safety regulations.

Mitigation Measures

275. So far, local contractor firms in Pakistan working on large and medium scale environmentally sensitive projects have an unsatisfactory record for complying with workplace and environmental safety regulations. To address this, the contractor will

be required to define an Occupational and Environmental Health and Safety procedure for all work, including work camp operation, management of cement dust, and use of Personal Safety Equipment. These procedures should be developed and approved by the PMU in collaboration with the CIU before the contractor commences any physical works on ground.

6.2.4 Identification of Locations for Labor Camps and ancillary facilities

Impacts

276. The duration of the construction activity for the Parking Sheds development is expected to be 6 months and a considerable amount of work force will be engaged for development. As a result, worker camps will need to be developed and ancillary facilities will need to be provided such as electricity, washrooms for labor with suitable effluent and sewage disposal facilities as well as water for their everyday use for drinking and bathing etc.

Mitigation measures

277. In order to prevent a nuisance, specific locations shall be designated for development of the labor camps. All necessary facilities and amenities shall be provided in these camps such as electricity, sufficient supply of water, solid and liquid effluent waste disposal facilities etc.

278. The use of proper planning while identifying locations for the labor camps will ensure there is minimal disturbance to all key receptors and the traffic is not disrupted by labor camps being set up roadside next to the construction sites.

6.2.5 Cultural Heritage & Religious Sites, Social Infrastructure

Impacts

279. No temples or religious sites are in proximity to the works to cause a nuisance.

280. The sensitive receptors already identified in the project areas are all separated and there will be sufficient buffer distance between the works and these facilities such that no major significant impact would be expected from the works. However, consideration should be made not to construct at night, from 7 pm onwards till 6 am in the morning, to avoid nuisances.

Mitigation Measures

No mitigation measures are required.

6.2.6 Land Acquisition and Resettlement Impacts

Impacts

281. The proposed works for the Parking Sheds will be conducted on publicly owned land and no land acquisition or resettlement is expected.

Mitigation Measures

No mitigation measures required.

6.3 Construction Phase

Impact Screening Matrix

282. The screening of potential impacts during the construction phase is provided in **Table 6.2** below.

Table 6.2: Screening of Possible Impacts during Construction Phase

S/No.	Potential Impact	Likelihood (Certain, Likely, Unlikely, Rare)	Consequence (Catastrophic, Major, Moderate, Minor)	Risk Level (Significant, Medium, Low)	Residual Impact (Significant, Medium, Low)
1	Degradation of air quality due to construction works	Certain	Major	Significant	Low
2	Potential accidents and injuries to communities in project area during construction works	Likely	Major	Medium	Low
3	Injuries to workers from lack of necessary training and/or not using PPEs etc.	Likely	Major	Medium	Low
4	High noise levels from construction activities	Likely	Major	Medium	Low
5	Improper handling and/or disposal of hazardous and non-hazardous waste	Likely	Moderate	Medium	Low

6	Untreated disposal of effluent from worker camps	Likely	Moderate	Medium	Low
7	Soil Contamination	Unlikely	Moderate	Low	Low
8	Employment Conflicts	Likely	Moderate	Medium	Low
9	Communicable diseases	Likely	Moderate	Medium	Low
10	Vegetation and Wildlife Loss	Unlikely	Moderate	Low	Low
11	Historical/Archaeological Sites	Unlikely	Moderate	Low	Low

Critical Risk Level

Significant Risk Level

Medium Risk Level

Low Risk Level

6.3.1 Air Quality

Impacts

283. The proposed Parking Shed development will involve earth works and transporting prefabricated material on project sites. This will likely lead to an increase in SPM (Suspended Particulate Matter) in the construction zones.

284. Potential sources of particulate matter emission during construction activities include earthworks (dirt or debris pushing and grading), exposed surfaces, exposed storage piles, truck dumping, hauling, vehicle movement on unpaved roads, combustion of liquid fuel in equipment and vehicles, land excavation, and concrete mixing and batching.

285. Vehicles carrying construction material are expected to result in increased SPM levels near the haul roads. This can be of potential importance if the vehicles pass through the areas with a high concentration of sensitive receptors, such as schools and hospitals in this particular case.

286. At the construction yard, the dust levels are also expected to increase due to unloading of construction materials. It shall be ensured that most of the excavated material will be used within the project, with minimal cut and fill material to come from outside the site.

287. The quantity of dust that will be generated on a particular day will depend on the magnitude and nature of activity and the atmospheric conditions prevailing on the day. Due to the uncertainty in values of these parameters, it is not possible to calculate the quantity from a 'bottom-up' approach, that is, from adding PM10 emissions from every activity on the construction site separately. Typical and worst-case PM10 emissions from construction sites have been estimated12 as 0.27 megagram per hectare per month of activity (Mg/ha-month) and 1.04 Mg/ha-month, respectively.

Fugitive Dust Control

288. The source wise fugitive control measures are provided in **Table 6.3** below.

Table 6.3: Control measures for Fugitive Dust emissions

Source	Control Measures
Earth Moving	For any earth moving that is to take place in the immediate vicinity from the site boundary, watering must be conducted as required to prevent visible dust emissions
Disturbed Surface Areas	Apply dust suppression measures (clear vegetation only from areas where work is to commence, plant or mulch areas that will not receive traffic, construct artificial wind breaks or wind screens) frequently to maintain a stabilized surface. Areas that cannot be stabilized, such as wind driven dust, must have an application of water at least twice a day
Inactive Disturbed Surface Areas	Apply dust suppressants (clear vegetation only from areas where work is to commence, plant or mulch areas that will not receive traffic, construct artificial wind breaks or wind screens) in sufficient quantity and frequency to maintain a stabilized surface
Unpaved Roads	Water all roads used for any vehicular traffic at least twice per day during active operations and restrict vehicle speed to 20 kmph.
Open Storage Piles	Apply water to at least 80 percent of the surface areas of all open storage piles on a daily basis when there is evidence of wind driven fugitive dust or install an enclosure all along the storage piles
Track-out Control	Wash down of construction vehicles (particularly tyres) prior to departure from site.

Mitigation Measures

289. The following mitigation measures will be adopted for preservation of the environment:

- At the project sites and the immediately adjoining areas, water will be sprinkled every three hours and at a higher frequency if felt necessary, at all construction sites to suppress dust emissions.
- All heavy equipment and machinery shall be fitted in full compliance with the national and local regulations.
- Stockpiled soil and sand shall be slightly wetted before loading, particularly in windy conditions.
- Fuel-efficient and well-maintained haulage trucks shall be employed to minimize exhaust emissions.
- Vehicles transporting soil, sand and other construction materials shall be covered with tarpaulin.
- Limitations to speeds of such vehicles as felt necessary. Transport through densely populated area should be avoided.
- Concrete plants to be controlled in line with statutory requirements and shall not be close to sensitive receptors.
- Stack height of generators will be at least 3 meters above the ground.
- Project traffic will maintain maximum speed limit of 20 km/hr on all unsealed roads within project area.
- The need for large stockpiles shall be minimized by careful planning of the supply of materials from controlled sources. Stockpiles should not be located within 50 m of schools, hospitals or other public amenities and shall be covered with tarpaulin when not in use and at the end of the working day to enclose dust. If large stockpiles (>25m^3) of crushed materials are necessary, they should be enclosed with side barriers and also covered when not in use.

Vehicular & Equipment Emissions

290. It shall be ensured that the following measures are taken to control emissions from vehicles being used in the construction activity:

- Periodically check and conduct maintenance of the construction machinery and haul vehicles.
- Regularly change the engine oil and use new engines/machinery/equipment having good efficiency and fuel burning characteristics.
- Use of catalytic converters and low Sulphur fuels.
- The stack height of generators will be at least 3 meters above the ground.

- Training of the technicians and operators of the construction machinery and drivers of the vehicles.
- Air quality monitoring at the project site during the construction phase.

6.3.2 Community Health and Safety

Impacts

291. The Parking Sheds construction will involve the use of considerable heavy machinery at the project site along with posing the risk of community members falling into trenches. In addition, the risk to commuters on the road during the construction works will be significant and thus a number of precautionary measures will be necessary to minimize the risk of possible accidents.

Mitigation Measures

292. The following mitigation measures will be implemented:

- Work areas outside the project site, especially where machinery is involved, will be barricaded and will be constantly monitored to ensure that local residents, particularly children stay away and Parking Sheds related infrastructure will also be cordoned off. Also, no machinery will be left unattended, particularly in running condition.
- Local communities in the project area will be briefed on traffic safety, especially women who are the main care providers to children.
- Speed limit of 20 km/hr will be maintained by all project related vehicles and nighttime driving of project vehicles will be limited where possible.
- Educate drivers on safe driving practices to minimize accidents and to prevent spill of hazardous substances and other construction materials during transport.

6.3.3 Occupational Health and Safety

Impacts

293. There is invariably a safety risk when construction works for the Parking Sheds are conducted, and precautions will be needed to ensure the safety of the workers.

294. The major safety hazards expected during the proposed activities are as follows:[13]

<u>Accident Hazards</u>

- Falls from height, especially when standing/working on ladders;
- Slips, trips and falls, especially while carrying heavy or bulky loads;

[13] https://www.ilo.org/wcmsp5/groups/public/---ed_protect/---protrav/---safework/documents/publication/wcms_192256.pdf

- Cuts and injuries caused by sharp instruments and tools;
- Hazard of suffocation from asphyxiant gases released in sewerage systems, or from oxygen deficiency, during maintenance and cleaning operations;
- Burns caused by hot parts of equipment, steam lines etc, by release of hot water or steam;
- Electric traumas, caused by defective installations and equipment, especially portable;
- Musculoskeletal injury (especially of back), resulting from lifting and moving of heavy loads;

Physical Hazards

- Exposure to cold and/or heat stress, as a result of rapid movement between cold and hot areas;
- Exposure to UV radiation during welding operations;

Chemical Hazards

- Exposure to various chemicals, such as: adhesives, caulking compounds, fluxes (solder), hydrochloric acid, zind chloride, tar and solvents, various greases and inorganic lead;

Biological Hazards

- Exposure to parasites, such as hookworm, ascaris, and various mites, chiggers and ticks;

Ergonomic, psychosocial and organizational factors

- Psychological stress due to dissatisfaction at work due to issues with peers, superiors etc.;
- General ill feeling as a result of work in confined spaces and development of 'sick building syndrome';

Mitigation Measures

295. The Contractor will be required to take measures such as:

- Ensuring that all workers are provided with and use appropriate Personal Protective Equipment (helmet, hand gloves, boots, masks etc);
- Follow standard practices of safety checks as prescribed before use of equipment;
- Provide on-site Health and Safety Training for all site personnel;

296. The Contractor will be required to prepare and implement an effective Worker Health and Safety Plan that is supported by trained first aid personnel and emergency response facilities. Construction contracts will include standard Worker Health and Safety measures and contractors will be bound to implement these fully. This will include mandatory wearing of dust masks for any cement handling operations or at any area where cement dust is in the air.

297. Monitoring will be required to ensure that the health and safety plan based on contract specifications is followed. Cement feed hopper areas will be inspected daily to ensure compliance with the requirement of dust masks.

298. Based on the type of hazard applicable during the proposed works at site, the following mitigation measures as per IFC guidelines for Occupational Health and Safety (OH&S) must be implemented:[14]

Physical Hazards

Rotating and Moving Equipment

299. Injury or death can occur from being trapped, entangled, or struck by machinery parts due to unexpected starting of equipment or unobvious movement during operations. Recommended protective measures include:

- Designing machines to eliminate trap hazards and ensuring that extremities are kept out of harm's way under normal operating conditions. Examples of proper design considerations include two-hand operated machines to prevent amputations or the availability of emergency stops dedicated to the machine and placed in strategic locations. Where a machine or equipment has an exposed moving part or exposed pinch point that may endanger the safety of any worker, the machine or equipment should be equipped with, and protected by, a guard or other device that prevents access to the moving part or pinch point. Guards should be designed and installed in conformance with appropriate machine safety standards.

- Turning off, disconnecting, isolating, and de-energizing (Locked Out and Tagged Out) machinery with exposed or guarded moving parts, or in which energy can be stored (e.g. compressed air, electrical components) during servicing or maintenance.

- Designing and installing equipment, where feasible, to enable routine service, such as lubrication, without removal of the guarding devices or mechanisms.

Noise

- No employee should be exposed to a noise level greater than 85 dB(A) for a duration of more than 8 hours per day without hearing protection. In addition, no unprotected

[14] https://www.ifc.org/wps/wcm/connect/1d19c1ab-3ef8-42d4-bd6b-cb79648af3fe/2%2BOccupational%2BHealth%2Band%2BSafety.pdf?MOD=AJPERES&CVID=ls62x8l

ear should be exposed to a peak sound pressure level (instantaneous) of more than 140 dB(C). ·

- The use of hearing protection should be enforced actively when the equivalent sound level over 8 hours reaches 85 dB(A), the peak sound levels reach 140 dB(C), or the average maximum sound level reaches 110dB(A). Hearing protective devices provided should be capable of reducing sound levels at the ear to at least 85 dB(A). ·
- Although hearing protection is preferred for any period of noise exposure in excess of 85 dB(A), an equivalent level of protection can be obtained, but less easily managed, by limiting the duration of noise exposure. For every 3 dB(A) increase in sound levels, the 'allowed' exposure period or duration should be reduced by 50 percent.
- Prior to the issuance of hearing protective devices as the final control mechanism, use of acoustic insulating materials, isolation of the noise source, and other engineering controls should be investigated and implemented, where feasible.
- Periodic medical hearing checks should be performed on workers exposed to high noise levels.

Vibration

300. Exposure to hand-arm vibration from equipment such as hand and power tools, or whole-body vibrations from surfaces on which the worker stands or sits, should be controlled through choice of equipment, installation of vibration dampening pads or devices, and limiting the duration of exposure. Limits for vibration and action values. Exposure levels should be checked on the basis of daily exposure time and data provided by equipment manufacturers.

Electrical

301. Exposed or faulty electrical devices, such as circuit breakers, panels, cables, cords and hand tools, can pose a serious risk to workers. Overhead wires can be struck by metal devices, such as poles or ladders, and by vehicles with metal booms. Vehicles or grounded metal objects brought into close proximity with overhead wires can result in arcing between the wires and the object, without actual contact. Recommended actions include:

- Marking all energized electrical devices and lines with warning signs; ·
- Locking out (de-charging and leaving open with a controlled locking device) and tagging-out (warning sign placed on the lock) devices during service or maintenance;
- Checking all electrical cords, cables, and hand power tools for frayed or exposed cords and following manufacturer recommendations for maximum permitted operating voltage of the portable hand tools; ·

- Double insulating / grounding all electrical equipment used in environments that are, or may become, wet; using equipment with ground fault interrupter (GFI) protected circuits; ·

- Protecting power cords and extension cords against damage from traffic by shielding or suspending above traffic areas; ·

- Appropriate labeling of service rooms housing high voltage equipment ('electrical hazard') and where entry is controlled or prohibited; ·

- Rubber tired construction or other vehicles that come into direct contact with, or arcing between, high voltage wires may need to be taken out of service for periods of 48 hours and have the tires replaced to prevent catastrophic tire and wheel assembly failure, potentially causing serious injury or death;

- Conducting detailed identification and marking of all buried electrical wiring prior to any excavation work.

Eye Hazards

302. Solid particles from a wide variety of construction operations, and / or a liquid chemical spray may strike a worker in the eye causing an eye injury or permanent blindness. Recommended measures include:

- Use of machine guards or splash shields and/or face and eye protection devices, such as safety glasses with side shields, goggles, and/or a full face shield. Specific Safe Operating Procedures (SOPs) may be required for use of sanding and grinding tools and/or when working around liquid chemicals. Frequent checks of these types of equipment prior to use to ensure mechanical integrity is also good practice. Machine and equipment guarding should conform to standards published by organizations such as CSA, ANSI and ISO. ·

- Moving areas where the discharge of solid fragments, liquid, or gaseous emissions can reasonably be predicted (e.g. discharge of sparks from a metal cutting station, pressure relief valve discharge) away from places expected to be occupied or transited by workers or visitors. Where machine or work fragments could present a hazard to transient workers or passers-by, extra area guarding or proximity restricting systems should be implemented, or PPE required for transients and visitors.

- Provisions should be made for persons who have to wear prescription glasses either through the use overglasses or prescription hardened glasses.

Welding/Hot Work

303. Welding creates an extremely bright and intense light that may seriously injure a worker's eyesight. In extreme cases, blindness may result. Additionally, welding may produce noxious fumes to which prolonged exposure can cause serious chronic diseases. Recommended measures include: ·

- Provision of proper eye protection such as welder goggles and/or a full-face eye shield for all personnel involved in, or assisting, welding operations. Additional methods may include the use of welding barrier screens around the specific work station (a solid piece of light metal, canvas, or plywood designed to block welding light from others). Devices to extract and remove noxious fumes at the source may also be required. ·

- Special hot work and fire prevention precautions and Standard Operating Procedures (SOPs) should be implemented if welding or hot cutting is undertaken outside established welding work stations, including 'Hot Work Permits, stand-by fire extinguishers, stand-by fire watch, and maintaining the fire watch for up to one hour after welding or hot cutting has terminated. Special procedures are required for hot work on tanks or vessels that have contained flammable materials.

Industrial Vehicle Driving and Site Traffic

304. Poorly trained or inexperienced industrial vehicle drivers have increased risk of accident with other vehicles, pedestrians, and equipment. Industrial vehicles and delivery vehicles, as well as private vehicles on-site, also represent potential collision scenarios. Industrial vehicle driving and site traffic safety practices include:

- Training and licensing industrial vehicle operators in the safe operation of specialized vehicles such as forklifts, including safe loading/unloading, load limits. ·

- Ensuring drivers undergo medical surveillance. ·

- Ensuring moving equipment with restricted rear visibility is outfitted with audible back-up alarms. ·

- Establishing rights-of-way, site speed limits, vehicle inspection requirements, operating rules and procedures (e.g. prohibiting operation of forklifts with forks in down position), and control of traffic patterns or direction. ·

- Restricting the circulation of delivery and private vehicles to defined routes and areas, giving preference to 'one-way' circulation, where appropriate.

Ergonomics, Repetitive Motion, Manual Handling

305. Injuries due to ergonomic factors, such as repetitive motion, overexertion, and manual handling, take prolonged and repeated exposures to develop, and typically require periods of weeks to months for recovery. These OHS problems should be minimized or eliminated to maintain a productive workplace. Controls may include: ·

- Facility and workstation design with 5th to 95th percentile operational and maintenance workers in mind. ·

- Use of mechanical assists to eliminate or reduce exertions required to lift materials, hold tools and work objects, and requiring multi-person lifts if weights exceed thresholds. ·
- Selecting and designing tools that reduce force requirements and holding times, and improve postures. ·
- Providing user adjustable work stations. ·
- Incorporating rest and stretch breaks into work processes, and conducting job rotation. ·
- Implementing quality control and maintenance programs that reduce unnecessary forces and exertions. ·
- Taking into consideration additional special conditions such as left-handed persons.

Working at Heights

306. Fall prevention and protection measures should be implemented whenever a worker is exposed to the hazard of falling more than two meters; into operating machinery; into water or other liquid; into hazardous substances; or through an opening in a work surface. Fall prevention / protection measures may also be warranted on a case-specific basis when there are risks of falling from lesser heights. Fall prevention may include:

- Installation of guardrails with mid-rails and toe boards at the edge of any fall hazard area. ·
- Proper use of ladders and scaffolds by trained employees. ·
- Use of fall prevention devices, including safety belt and lanyard travel limiting devices to prevent access to fall hazard area, or fall protection devices such as full body harnesses used in conjunction with shock absorbing lanyards or self-retracting inertial fall arrest devices attached to fixed anchor point or horizontal life-lines. ·
- Appropriate training in use, serviceability, and integrity of the necessary PPE. ·
- Inclusion of rescue and/or recovery plans, and equipment to respond to workers after an arrested fall.

<u>Physical Hazards</u>

Air Quality

307. Poor air quality due to the release of contaminants into the work place can result in possible respiratory irritation, discomfort, or illness to workers. Employers

should take appropriate measures to maintain air quality in the work area. These include: ·

- Maintaining levels of contaminant dusts, vapors and gases in the work environment at concentrations below those recommended as TWA-TLV's (threshold limit value)—concentrations to which most workers can be exposed repeatedly (8 hours/day, 40 hrs/week, week-after week), without sustaining adverse health effects. ·
- Developing and implementing work practices to minimize release of contaminants into the work environment including:
  - Direct piping of liquid and gaseous materials
  - Minimized handling of dry powdered materials; o Enclosed operations
  - Local exhaust ventilation at emission/release points
  - Vacuum transfer of dry material rather than mechanical or pneumatic conveyance
  - Indoor secure storage, and sealed containers rather than loose storage
- Where ambient air contains several materials that have similar effects on the same body organs (additive effects).

Fire and Explosions

308. Fires and or explosions resulting from ignition of flammable materials or gases can lead to loss of property as well as possible injury or fatalities to project workers. Prevention and control strategies include:

- Storing flammables away from ignition sources and oxidizing materials. Further, flammables storage area should be:
  - Remote from entry and exit points into buildings
  - Away from facility ventilation intakes or vents
  - Have natural or passive floor and ceiling level ventilation and explosion venting
  - Use spark-proof fixtures
  - Be equipped with fire extinguishing devices and self closing doors, and constructed of materials made to withstand flame impingement for a moderate period of time ·
- Providing bonding and grounding of, and between, containers and additional mechanical floor level ventilation if materials are being, or could be, dispensed in the storage area. ·

- Where the flammable material is mainly comprised of dust, providing electrical grounding, spark detection, and, if needed, quenching systems.

- Defining and labeling fire hazards areas to warn of special rules (e.g. prohibition in use of smoking materials, cellular phones, or other potential spark generating equipment). ·

- Providing specific worker training in handling of flammable materials, and in fire prevention or suppression.

Corrosive, oxidizing, and reactive chemicals

309. Corrosive, oxidizing, and reactive chemicals present similar hazards and require similar control measures as flammable materials. However, the added hazard of these chemicals is that inadvertent mixing or intermixing may cause serious adverse reactions. This can lead to the release of flammable or toxic materials and gases, and may lead directly to fires and explosions. These types of substances have the additional hazard of causing significant personal injury upon direct contact, regardless of any intermixing issues. The following controls should be observed in the work environment when handling such chemicals: ·

- Corrosive, oxidizing and reactive chemicals should be segregated from flammable materials and from other chemicals of incompatible class (acids vs. bases, oxidizers vs. reducers, water sensitive vs. water based, etc.), stored in ventilated areas and in containers with appropriate secondary containment to minimize intermixing during spills. ·

- Workers who are required to handle corrosive, oxidizing, or reactive chemicals should be provided with specialized training and provided with, and wear, appropriate PPE (gloves, apron, splash suits, face shield or goggles, etc). ·

- Where corrosive, oxidizing, or reactive chemicals are used, handled, or stored, qualified first-aid should be ensured at all times. Appropriately equipped first-aid stations should be easily accessible throughout the place of work, and eye-wash stations and/or emergency showers should be provided close to all workstations where the recommended first-aid response is immediate flushing with water.

<u>Biological Hazards</u>

310. Biological agents represent potential for illness or injury due to single acute exposure or chronic repetitive exposure. Biological hazards can be prevented most effectively by implementing the following measures: ·

- If the nature of the activity permits, use of any harmful biological agents should be avoided and replaced with an agent that, under normal conditions of use, is not dangerous or less dangerous to workers. If use of harmful agents cannot be avoided, precautions should be taken to keep the risk of exposure as low as possible and maintained below internationally established and recognized exposure limits.

- Work processes, engineering, and administrative controls should be designed, maintained, and operated to avoid or minimize release of biological agents into the working environment. The number of employees exposed or likely to become exposed should be kept at a minimum. ·
- The employer should review and assess known and suspected presence of biological agents at the place of work and implement appropriate safety measures, monitoring, training, and training verification programs. ·
- Measures to eliminate and control hazards from known and suspected biological agents at the place of work should be designed, implemented and maintained in close co-operation with the local health authorities and according to recognized international standards.

6.3.4 Noise

Impacts

311. The Parking Sheds construction will result in different construction equipment and machinery being used which will generate high noise levels at the project site and in the project area.

312. The detailed mapping of sensitive receptors has been conducted and the types of receptors and their respective distances from the work sites are provided earlier. However, any required mitigation measures that shall be proposed will be to control potential impacts on noise to prevent any long-term impacts within the project area.

313. The assessment of the noise impacts on the sensitive receptors that have been identified at various locations in the project area depend upon:

- Characteristics of noise source (instantaneous, intermittent or continuous in nature)
- Time of day at which noise occurs, and
- Location of noise source

314. Each construction phase has its unique noise characteristics due to use of different equipment items. The potential sources of noise during the preparation, construction, and worksite closure phases for the Parking Sheds work include equipment, machinery, and transportation used for the construction activities. The equipment used for construction will be the major source of noise.

315. The construction activities will include use of generators, excavators, concrete mixing trucks and back up alarms, which can generate significant noise.

316. Since various modern machines are acoustically designed to generate low noise levels, any high noise levels that might be generated will only be for a short duration during the construction phase.

317. Depending on the construction equipment used and its distance from the receptors, the community and the workers may typically be exposed to intermittent and variable noise levels. During the day, such noise results in general annoyance and can interfere with sleep during the night. In general, human sound perception is such that a change in sound level of 3 dB is just noticeable, a change of 5 dB is clearly noticeable, and a change of 10 dB is perceived as a doubling or halving of sound level.

318. Due to the various construction activities, there will be temporary noise impacts in the immediate vicinity of the project site. The movement of heavy vehicles, loading, transportation and unloading of construction materials produces significant noise during the construction stage. However, these increased noise levels will prevail only for a short duration during the construction phase.

319. The **Table 6.4** below represents typical noise levels from various construction equipment items. It should be noted that the values indicated in the table may differ depending on the brand and age of machinery provided/used by construction company.

Table 6.4: Construction Equipment Noise Ranges, dB(A)

Equipment	Peak Noise Range at 15 m	Typical Peak Sound Level in a Work Cycle[a] at 15 m	Typical 'Quieted Equipment' Sound Level[b] at 15 m	Construction Phase		
				Earthworks	Structures	Installation
Batching plant	82-86	84	81		Y	
Concrete mixers	76-92	85	82		Y	
Cranes	70-94	83	80		Y	Y
Excavators	74-92	85	82	Y		
Front loader	77-94	85	82	Y	Y	Y
Water bowsers	85-93	88	85	Y	Y	Y
Graders	72-92	85	82	Y		
Bulldozers	65-95	85	80	Y		
Pavers	87-89	88	80	Y		
Pumps	68-72	76	75	Y	Y	Y

Equipment	Peak Noise Range at 15 m	Typical Peak Sound Level in a Work Cycle[a] at 15 m	Typical 'Quieted Equipment' Sound Level[b] at 15 m	Construction Phase		
				Earthworks	Structures	Installation
Diesel generators	72-82	81	77		Y	Y
Drilling machines	82-98	90	87		Y	Y
Compressors	74-88	81	71		Y	
Dumpers	77-96	88	83	Y	Y	
Dump/flatbed Truck	75-85	80	77	Y	Y	Y

Sources: USEPA, 1971; http://www.waterrights.ca.gov/EIRD/text/Ch11-Noise.pdf; http://www.lacsd.org/LWRP%202020%20Facilities%20Plan%20DEIR/4_6_Noise.pdf; http://newyorkbiz.com/DSEIS/CH18Construction.pdf

Notes:

a. Where typical value is not cited in literature, mean of the peak noise range is assumed

b. Quieted equipment can be designed with enclosures, mufflers, or other noise-reducing features. Where data is not available, a 3 dB reduction is assumed

320. Precise information on the type, quantity and location of equipment to be used during the construction phase is not available at this stage and will be dependent on the working methods of the selected contractors. However, preliminary calculations have been conducted to provide a general magnitude of the noise levels during various construction phases.

321. The mitigation measures listed below shall be implemented to minimize noise levels during the construction activity as far as possible.

Mitigation Measures

322. The following mitigation measures will be implemented:

- Equipment noise will be reduced at source by proper design, maintenance and repair of construction machinery and equipment. Noise from vehicles and power generators will be minimized by use of proper silencers and mufflers.
- Excessive noise emitting equipment will not be allowed to operate and will be replaced.
- Blowing of horns will be prohibited on access roads to work sites.
- As a rule, the operation of heavy equipment shall be conducted in daylight hours.
- Construction equipment, which generates excessive noise, shall be enclosed or fitted with effective silencing apparatus to minimize noise.
- Well-maintained haulage trucks will be used with speed controls.

6.3.5 Hazardous and Non-Hazardous Waste Management

Impacts

323. In the absence of national or domestic regulations and a waste management system in the project areas, waste disposal of materials containing contents of both hazardous and non hazardous nature such as scrap wood, bricks, concrete, asphalt, plumping fixtures, piping, insultation (asbestos and non-asbestos), metal scraps, oil, electrical wiring and components, chemicals, paints, solvents etc. can potentially become a serious environmental issue, particularly with the local contractors. To avoid any potential issue, the CIU in collaboration with the PMU will need to impose adequate internal controls.

Mitigation measures

324. A waste management plan will be developed prior to the start of construction. This plan will cater to sorting of hazardous and non-hazardous materials prior to disposal, placing of waste bins at the project sites for waste disposal and an onsite hazardous waste storage facility.

325. Licensed waste contractors will be engaged to dispose off all non-hazardous waste material that cannot be recycled or reused.

326. Training will be provided to personnel for identification, segregation and management of waste.

6.3.6 Camp Effluent

Impacts

327. The staff and labor camps for the construction of the proposed Parking Sheds will be a source of wastewater generated from the toilets, washrooms and the kitchen. The wastewater will not meet the national environmental standards and will therefore need treatment prior to disposal.

328. The project sites where construction is being conducted must not be treated by the project staff and/or labor as a public toilet or for disposal of camp effluent.

Mitigation measures

329. It will be ensured that no untreated effluent is released to the environment.

330. A closed sewage treatment system will treat the effluent, which will then be disposed of in a soak pit or will be used for plantation. Proper septic tank will be arranged at camp sites for the sewage treatment.

6.3.7 Soil Erosion and Sedimentation

Impacts

331. The majority of the works proposed for development of the Parking Sheds may not result in soil erosion and sedimentation.

Mitigation measures

332. No mitigation is required.

6.3.8 Soil Contamination

Impacts

333. During the project construction, spills of fuel, lubricants and chemicals can take place while transferring from one container to another or during refueling. Also, during maintenance of equipment and vehicles, through leakages from equipment and containers and as a result of traffic accidents.

334. Depending on the nature of the material, location of spill and quantity of spill, the soil can get contaminated.

Mitigation measures

335. It will be ensured that spill prevention trays are provided and used during refueling. Also, on-site maintenance of construction vehicles and equipment will be avoided as far as possible. In case on-site maintenance is unavoidable, tarpaulin or other impermeable material will be spread on the ground to prevent contamination of soil.

336. Regular inspections will be carried out to detect leakages in construction vehicles and equipment and all vehicles will be washed in external commercial facilities.

337. Fuels, lubricants and chemicals will be stored in covered bounded areas, underlain with impervious lining. Appropriate arrangements, including shovels, plastic bags and absorbent materials will be available near fuel and oil storage areas.

6.3.9 Employment Conflicts

Impacts

338. The proposed Parking Sheds project is not likely to create any significant permanent job opportunities. Even unskilled and semi-skilled employment opportunities that are likely to be created will be for a short period, while the project is

constructed. As persons with relevant skills may be available locally, people from the project area are likely to fill a significant number of the semi-skilled and skilled jobs.

339. This issue of provision of jobs can become particularly problematic if it is perceived by the local population that a significant number of construction-related jobs opportunities are not given to people from the local community. This can result in friction between local residents and construction workers from outside of the community.

Mitigation measures

340. The Construction Contractor will adopt a transparent hiring policy. Prior to the commencement of the construction activity, the local communities in the project area will be informed of the employment policy in place and number of people that can be employed for this project.

341. It will be ensured that maximum number of unskilled and semi-skilled jobs will be provided to the residents of the project area.

342. The PMU will ensure a balanced process of employment of the communities in the project area with preference given to those most directly affected by the project.

6.3.10 Communicable diseases

Impacts

343. Communicable diseases such as COVID-19 and HIV may be introduced due to the immigration of workers associated with the project.

Mitigation measures

344. A communicable diseases prevention program will be prepared for construction workers or residents near the construction sites.

345. Reporting employees who are showing symptoms such as fever or high body temperature, coughing, difficulty of breathing or chest pain. Sending them to clinic or nearest hospital immediately.

346. Body temperature monitoring through Thermal Scanner or other devices to monitor the body temperature of each employee entering/leaving the site or at camp.

347. Awareness and implementation of Quarantine Procedure for all employees who came back from vacation.

348. Conduct regular housekeeping and sanitation for all access/egress points as well as Log-in/Log-out devices. If possible, deactivate Log-in/Log-out devices such as

biometrics. Conduct awareness on how to protect yourself against the infection of COVID-19 through campaign (posters, distribution of brochure). Communicating and implementing COVID-19 Guidelines

349. Ensure Disinfection of offices and machinery periodically, temperature screening at project entrances, provision of hand sanitizers to office and labour staff, provision of surgical face masks, instruction boards and signage at different locations for COVID-19 awareness

6.3.11 Vegetation and Wildlife Loss

Impacts

350. The project consists of an urban environment located in the main city with rich human settlements and activities and thus contains limited vegetation cover and no wildlife of any significance as common in areas located in urban centers.

351. No impact on vegetation and wildlife is expected since no wildlife is present in project area. There are only minor trees, shrubs and bushes that will be cleared up, if felt necessary, during the site preparation stage of the project.

Mitigation measures

352. No unnecessary cutting down of vegetation will be allowed, cutting of trees that cannot be avoided a replantation plan will be in-place. Five to ten numbers of trees will be planted on the designated site by the Metropolitan Corporation Sahiwal and Municipal Corporation Sialkot in their respective cities to compensate the trees being cut.

353. No use of vegetation or trees as firewood will be permitted

354. No hunting or killing of animals will be permitted.

6.3.12 Historical/Archaeological Sites

355. No historical/archaeological sites have been identified in the project area or project site.

Mitigation measures

356. If evidence of any archaeological remains is found during the construction activities, the excavation work will be stopped immediately, and necessary next steps taken to identify the archaeological discovery based on the ‘Chance Find’ procedures provided as **Annexure K**.

6.4 Impacts Associated with Operation

357. The potential impacts from operation of the Parking Sheds facility are provided as **Table 6.5** below.

Operation Phase

Table 6.5: Screening of Possible Impacts during Operation Phase

S/No.	Potential Impact	Likelihood (Certain, Likely, Unlikely, Rare)	Consequence (Catastrophic, Major, Moderate, Minor)	Risk Level (Significant, Medium, Low)
1	Noise Generation due to Vehicular Movement	Likely	Minor	Low
2	Waste water generation from office toilets and vehicle washing	Likely	Minor	Low
3	Sludge generation	Likely	Minor	Low
4	Odor generation	Likely	Minor	Low
5	Improper disposal of waste generated from office and workshop	Unlikely	Minor	Low
6	Improvements in Public Health	Positive impacts expected		

Critical Risk Level

Significant Risk Level

Medium Risk Level

Low Risk Level

Positive Impacts

6.4.1 Noise Generation due to Vehicular Movement

Impacts

358. Noise will be generated from the vehicular movement. However, any noise levels are expected to quickly dissipate considering the layout of the parking sheds with limited built structures and a 'spread out' layout of the sheds.

Mitigation measures

359. Blowing of horns will be restricted and vehicle speed limits will be fixed and closely monitored to minimize noise levels as far as possible.

6.4.2 Waste water Generation from office toilets and vehicle washing

Impacts

360. Waste water will generate from vehicles washing and from the toilet of office. This waste water will be domestic in nature and will not contain any hazardous elements but it needs to manage.

Mitigation measures

361. All the waste water will be collected into the septic tank and then will be discharged only into the municipal sewerage drain.

6.4.3 Sludge Generation

Impacts

362. Washing of the vehicles, particularly their tyres and lower parts of the vehicles, located closer to the ground, which are more likely to gather debris and waste, could result in sludge being generated at the parking shed premises.

Mitigation measures

363. The following measures will be implemented:

- An efficient and fully functional sludge collection system shall be present throughout the shed premises to ensure any sludge generated is efficiently collected.

- A suitable location for disposal of the sludge shall be identified. All sludge collected at the parking shed shall be transported to the designated location for disposal as per international good practices.

- The possibility to use the sludge generated from the vehicle within the parking shed premises for use as compost or any other similar environment friendly use will be considered.

6.4.4 Odor Generation

Impacts

364. The parking of vehicles and their maintenance and washing activity in the parking shed premises may potentially cause low levels of odor to be generated, which is expected to be site specific and short term in nature.

Mitigation measures

365. The following measures will be implemented to ensure no odor is present in the parking sheds premises:

- No effluent/used water will be permitted to remain stagnant in the parking sheds premises through an efficient and fully functional drainage system present throughout the sheds.

- No hazardous and/or non-hazardous waste, such as oily waste, chemicals used for vehicle washing, engine maintenance fluids etc. will be permitted to remain at the parking sheds premises through efficient housekeeping measures to prevent any odor being released from them.

- All vehicle maintenance activities will be conducted in well ventilated facilities that are not enclosed in any way to ensure any odor quickly dissipates into the open environment.

- Spraying of disinfectants and odor neutralizing chemicals shall be conducted, if felt necessary, to neutralize any areas within the parking sheds with high levels of odor generation.

- Any additional cost effective and efficient measures for odor management will also be implemented, if felt necessary.

6.4.5 Improper disposal of waste generated from office and workshop

Impacts

366. Minor quantity of domestic solid waste will be produced from the offices and vehicles workshop facility and needs to be managed.

Mitigation measures

367. Waste will be collected into the containers and municipal solid waste management service vender will pick it for its disposal.

6.4.6 Disease Vector Generation and Transmission

Impacts

368. The waste management vehicles and equipment being parked at the sheds may result in generation of disease vectors such as mosquitoes, flies and other pests etc.

Mitigation measures

- Comprehensive plan must be developed and implemented to spray chemicals into the Parking area at different frequencies throughout the year based on the seasons;
- Immediate proper washing of vehicles before parking;
- Cover the solid waste collection containers used for office and in Parking area
- Cover all sewerage drains that carry the sewage from parking sheds area and inject pesticides and/or chemicals as required to minimize/prevent breeding of disease vectors;
- Maintain good housekeeping of parking areas;
- Include in safety training program for workers, safe handling and personal hygiene practices to minimize exposure to pathogens and vectors;
- Provide and require use of suitable personal protective clothing and equipment to prevent contact with waste (e.g. rubber gloves, aprons, boots, etc.). Especially provide prompt medical attention and cover any skin trauma such as cuts and abrasions to prevent infection and use protective clothing and goggles to prevent contact with spray and splashes;
- Provide areas for workers to shower and change clothes before leaving work and provide laundry service for work clothes. This practice also helps to minimize chemical and radionuclide exposure;
- Encourage workers at Parking Sheds to wash hands frequently.

6.4.7 Improvements in Public Health

Impacts

369. The availability of Parking Sheds facility for the solid waste management machinery will support solid waste management operation in both Sahiwal and Sialkot cities. This in turn will ensure the timely and improved solid waste management system in the cities and will not be allowed to piling of solid waste in cities. This is expected to result in an overall positive impact on the public health by preventing issues such as disease vector generation, waterborne diseases, groundwater aquifer contamination etc.

Mitigation measures

No measures required.

7 Environmental Management Plan & Institutional Requirements

7.1 Introduction

370. The Environmental Management Plan (EMP) is developed to eliminate and/or mitigate the impacts envisaged at the design, construction and operation stages.

371. The detailed EMP provided in this document as **Table 7.1** ensures that this project has no detrimental effect on the surrounding environment. The Plan shall act as a guideline for incorporating environmental measures to be carried out by the contractors engaged for the proposed project. It shall also be used for other parties concerned for mitigating possible impacts associated with project and will form part of the Contract documents to be considered alongside the specifications. This Plan shall act as the Environmental Management and Monitoring Plan during the construction phase of the project and will allow for prompt implementation of effective corrective measures.

7.2 Environmental Management Plan (EMP)

372. The EMP attached with this report ensures the following:

- Delivery of the prescribed environmental outcomes during all phases of this project;
- Formulating a system for compliance with applicable legislative requirements and obligations and commitments for this project;
- Ensure that project design process incorporates best practice environmental design and sustainability principles to minimize potential impacts of construction on the environment and community.
- Ensure that the construction work procedures minimize potential impacts on the environment and community.
- Develop, implement and monitor measures that minimize pollution and optimize resource use.

7.3 Objectives of EMP

373. The EMP provides a delivery mechanism to address potential impacts of the project activities, to enhance project benefits and to outline standardized good practice to be adopted for all project works. The EMP has been prepared with the objectives of:

- Defining the roles and responsibilities of the project proponent for the implementation of EMP and identifying areas where these roles and responsibilities can be shared with other parties involved in the execution and monitoring of the project;

- Outlining mitigation measures required for avoiding or minimizing potential negative impacts assessed by environmental study;
- Developing a monitoring mechanism and identifying requisite monitoring parameters to confirm effectiveness of the mitigation measures recommended in the study;
- Defining the requirements for communication, documentation, training, monitoring, management and implementation of the mitigation measures.

7.4 Environmental Management/Monitoring and Reporting

374. During the construction phase, the overall responsibility for the implementation and monitoring of the EMP rests with the City Manager – Sahiwal & Sialkot (CMS). The CMS, using the Project Management Consultant (PMC), will supervise the implementation of the proposed mitigation measures and monitor the implementation progress in the field.

375. The specific roles and responsibilities for environmental management and monitoring are provided in **Table 7.1** below. The expected costs for implementing any required mitigation measures are provided in **Table 7.7** below.

7.5 Institutional Arrangements

376. The environmental management plan will require involvement of the following organizations for its implementation:

i. Local Government and Community Development Department (LG&CDD)

377. The Local Government and Community Development Department (LG&CDD) of Punjab will be the Executing Agency (EA) of the project. Under the guidance of the Project Steering Committee, LG&CDD will be responsible for the overall execution of the project.

378. A Project Management Unit (PMU) has been established within LG&CDD to support LG&CDD.

ii. City Implementation Unit (CIU) – Sahiwal & Sialkot

379. The EA has established CIU in each of the two participating cities. The key role of the CIUs will be to support the cities in the implementation of the civil works components of the project.

7.5.1 Role of LG&CDD

380. The LG&CD Department, GoPb will:

- Act as the project executing agency (EA) for PICIIP;
- Establish a PMU, with adequate staff acceptable to ADB;
- Liaise with ADB to address any issues during design and implementation;
- Approve delegation of authorities to PMU and CIUs.

7.5.2 Role of PMU

381. The PMU will support LG&CD Department. The PMU will:

- Provide support to ADB missions;
- Coordinate activities with all stakeholders, review consultants, proposals, and provide overall guidance during various stages of project preparation;
- Act as a Secretariat to PSC headed by Chairman P&D Board;
- Manage and ensure safeguard due diligence and disclosure requirements including resettlement and environmental safeguards in accordance with ADB's Safeguard Policy Statement (2009) and government requirements;
- Manage and ensure effective implementation of the gender action plan;
- Ensure submission of all IEE requirements as per law by responsible entities; and
- Monitoring of activities in CIUs and the whole project.

7.5.3 Role of Municipal Corporation (MC)

382. The MC will:

- Facilitate land acquisition;
- Approve and implement all reforms related system, organizations, plans, and programs as required for the project including service delivery arrangements;
- Transfer assets and completed civil works to WSCs/USCs, as required for the projects and agreements; and
- Fill all vacancies in the MC, as per approved organogram and facilities required for CIU and Staff.

7.5.4 Role of City Implementation Unit (CIUs)

383. The CIUs will support the Municipal Corporations of Sahiwal & Sialkot in the following aspects:

- Conduct city level progress monitoring and reporting;
- Facilitate all monitoring requirements and reporting of GoPb and ADB;
- Ensure safeguard compliance and reporting in line with loan agreements;
- Monitor and ensure effective implementation of the gender action plan;
- Monitor city level activities for reporting and compliance.

7.5.5 Role of the ADB

384. The ADB will:

- Support the coordination and administration of the project;
- Provide guidance to LG&CD Department, PMU, MCs, and CIUs on implementation issues and project design;
- Disclose all safeguards documents, and monitor safeguards implementation;
- Monitor and report project performance;
- Conduct periodic review of the project;

7.5.6 Role of Project Contractor

385. The project contractor will be responsible for following items:

- Implementation of, or adherence to, all provisions of the IEE and EMP;
- Preparation of site specific EMPs (SSEMPs) as required.
- Contractor's environmental performance will rest with the person holding the highest management position within the contractor's organization. Reporting to their management, the contractor's site managers will be responsible for the effective implementation of the EMP.
- The Contractor will be required to have qualified Environmental Specialists in their team to ensure all mitigation measures are implemented during the different development phases of the project.

7.6 Monitoring Parameters

386. A monitoring plan for the construction phase of the project, indicating environmental parameters, frequency and applicable standards is provided below as **Table 7.3** below.

387. During the procurement/pre-construction period, the monitoring activities will focus on (i) checking the contractor's bidding documents, particularly to ensure that all necessary environmental requirements have been included; and (ii) checking that the contract documents' references to environmental mitigation measures requirements have been incorporated as part of contractor's assignment and making sure that any advance works are carried out in good time.

388. During the construction period, the monitoring activities will focus on ensuring that any required environmental mitigation measures are implemented to address possible impacts.

389. In general, the construction impacts will be manageable and no insurmountable impacts are predicted, provided that the EMP is implemented to its full extent as required in the Contract documents. However, experience suggests that some Contractors may not be familiar with this approach or may be reluctant to carry

out some measures. For the proposed project, in order that the Contractor is fully aware of the implications of the EMP and to ensure compliance, environmental measures must be costed separately in the tender documentation and listed as BoQ items, and that payment milestones must be linked to environmental performance, vis a vis the carrying out of the EMP.

390. The effective implementation of the EMP will be audited as part of the loan conditions and the executing agency must be prepared for this. In this regard, the PMC will guide the design engineers and Contractors on the environmental aspects.

7.7 Environmental Training

7.7.1 Capacity Building and Training

391. Capacity building and training programs are necessary for the project staff in order to control the negative impacts resulting from the project construction and during its operation phase. They will also require trainings on monitoring and inspecting of such a project for environmental impacts and for implementation of mitigation measures.

392. The details of this capacity building and training program are presented in the **Table 7.7** below.

Table 7.1: Environmental Management Plan

Project Activities	Section	Impact	Mitigation Measures Recommended	Responsibility		Timing
				Execution	Monitoring	
Design/Pre-Construction Phase	1.1	Lack of Integration of IEE/EMP requirements into bidding documents	The proposed 'Safeguards unit' that should be developed at the PMU should be assigned the task to check that design and bid documents are responsive to key environmental, social and safety considerations, and that the proposed method of work reflects the boundaries defined in the EMP. The bid documents must include the EMP and its implementation cost must be reflected in the BoQ.	CIU	PMU	BC: during detailed designing of the project
	1.2	Material Haul routes	The construction vehicles hauling materials along the Sahiwal city roads and anywhere where there are sensitive receptors such as hospitals, schools and/or roadside residences will be limited and the PMU in collaboration with the CIU will establish a route plan to minimize this disruption which shall be appended to the EMP.	CIU	PMU	BC: during detailed designing of the project
	1.3	Identification of Locations for Labor Camps and ancillary facilities	▪ In order to prevent a nuisance, specific locations shall be designated for development of the labor camps. All necessary facilities and amenities shall be	CIU	PMU	BC: during detailed designing of the sub-project

Project Activities	Section	Impact	Mitigation Measures Recommended	Responsibility		Timing
				Execution	Monitoring	
			provided in these camps such as electricity, sufficient supply of water, solid and liquid effluent waste disposal facilities etc. ▪ The use of proper planning while identifying locations for the labor camps will ensure there is minimal disturbance to all key receptors and the traffic is not disrupted by labor camps being set up roadside next to the construction sites.			
	1.4	Contractor's Environmental Safeguards Capacity	So far, local contractor firms in Pakistan working on large and medium scale environmentally sensitive projects have an unsatisfactory record for complying with workplace and environmental safety regulations. To address this, the contractor will be required to define an Occupational and Environmental Health and Safety procedure for all work, including work camp operation, management of cement dust, and use of Personal Safety Equipment. These procedures should be developed and approved by the PMU in collaboration with the CIU before the contractor commences any physical works	CIU	PMU	BC: during detailed designing of the sub-project

Project Activities	Section	Impact	Mitigation Measures Recommended	Responsibility		Timing
				Execution	Monitoring	
			on ground.			
Construction Phase	2.1	Air Quality	▪ At the Parking Sheds sites and the immediately adjoining areas, water will be sprinkled every three hours and at a higher frequency if felt necessary, at all construction sites to suppress dust emissions. ▪ All heavy equipment and machinery shall be fitted in full compliance with the national and local regulations. ▪ Stockpiled soil and sand shall be slightly wetted before loading, particularly in windy conditions. ▪ Fuel-efficient and well-maintained haulage trucks shall be employed to minimize exhaust emissions. ▪ Vehicles transporting soil, sand and other construction materials shall be covered with tarpaulin. ▪ Limitations to speeds of such vehicles as felt necessary. Transport through densely	Contractor	PMC, CIU	DC

Project Activities	Section	Impact	Mitigation Measures Recommended	Responsibility		Timing
				Execution	Monitoring	
Construction Phase (Continued…)			populated area should be avoided. ▪ Concrete plants to be controlled in line with statutory requirements and shall not be close to sensitive receptors. ▪ Stack height of generators will be at least 3 meters above the ground. ▪ Project traffic will maintain maximum speed limit of 20 km/hr on all unsealed roads within project area. ▪ The need for large stockpiles shall be minimized by careful planning of the supply of materials from controlled sources. Stockpiles should not be located within 50 m of schools, hospitals or other public amenities and shall be covered with tarpaulin when not in use and at the end of the working day to enclose dust. If large stockpiles (>25m^3) of crushed materials are necessary, they should be enclosed with side barriers and also covered when not in use. It shall be ensured that the following measures are taken to control emissions			

Project Activities	Section	Impact	Mitigation Measures Recommended	Responsibility		Timing
				Execution	Monitoring	
			from vehicles being used in the construction activity: ▪ Periodically check and conduct maintenance of the construction machinery and haul vehicles. ▪ Regularly change the engine oil and use new engines/machinery/equipment having good efficiency and fuel burning characteristics. ▪ Use of catalytic converters and low Sulphur fuels. ▪ The stack height of generators will be at least 3 meters above the ground. ▪ Training of the technicians and operators of the construction machinery and drivers of the vehicles. ▪ Air quality monitoring at the project site during the construction phase.			
	2.2	Community Health and Safety	▪ Work areas outside the project site, especially where machinery is involved, will be barricaded and will be constantly	Contractor	PMC, CIU	DC

Project Activities	Section	Impact	Mitigation Measures Recommended	Responsibility		Timing
				Execution	Monitoring	
			monitored to ensure that local residents, particularly children stay away while excavated areas. Also, no machinery will be left unattended, particularly in running condition. ▪ Local communities in the project area will be briefed on traffic safety, especially women who are the main care providers to children. ▪ Speed limit of 20 km/hr will be maintained by all project related vehicles and nighttime driving of project vehicles will be limited where possible. ▪ Educate drivers on safe driving practices to minimize accidents and to prevent spill of hazardous substances and other construction materials during transport.			
	2.3	Occupational Health and Safety	▪ Ensuring that all workers are provided with and use appropriate Personal Protective Equipment (helmet, hand gloves, boots, masks etc); ▪ Follow standard practices of safety checks	Contractor	PMC, CIU	DC

Project Activities	Section	Impact	Mitigation Measures Recommended	Responsibility		Timing
				Execution	Monitoring	
			as prescribed before use of equipment; ▪ Provide on-site Health and Safety Training for all site personnel; ▪ The Contractor will be required to prepare and implement an effective Worker Health and Safety Plan that is supported by trained first aid personnel and emergency response facilities. Construction contracts will include standard Worker Health and Safety measures and contractors will be bound to implement these fully. This will include mandatory wearing of dust masks for any cement handling operations or at any area were cement dust is in the air. ▪ Monitoring will be required to ensure that the health and safety plan based on contract specifications is followed. Cement feed hopper areas will be inspected daily to ensure compliance with the requirement of dust masks.			
	2.4	Noise	▪ Equipment noise will be reduced at source by proper design, maintenance and repair	Contractor	PMC, CIU	DC

Project Activities	Section	Impact	Mitigation Measures Recommended	Responsibility		Timing
				Execution	Monitoring	
			of construction machinery and equipment. Noise from vehicles and power generators will be minimized by use of proper silencers and mufflers. ▪ Excessive noise emitting equipment will not be allowed to operate and will be replaced. ▪ Blowing of horns will be prohibited on access roads to work sites. ▪ As a rule, the operation of heavy equipment shall be conducted in daylight hours. ▪ Construction equipment, which generates excessive noise, shall be enclosed or fitted with effective silencing apparatus to minimize noise. ▪ Well-maintained haulage trucks will be used with speed controls.			
	2.4	Hazardous and Non-Hazardous Waste Management	▪ A waste management plan will be developed prior to the start of construction. This plan will cater to sorting of hazardous	Contractor	PMC, CIU	DC

Project Activities	Section	Impact	Mitigation Measures Recommended	Responsibility		Timing
				Execution	Monitoring	
			and non-hazardous materials prior to disposal, placing of waste bins at the project sites for waste disposal and an onsite hazardous waste storage facility. ▪ Licensed waste contractors will be engaged to dispose off all non-hazardous waste material that cannot be recycled or reused. ▪ Training will be provided to personnel for identification, segregation and management of waste.			
	2.5	Untreated disposal of effluent from worker camps	▪ It will be ensured that no untreated effluent is released to the environment. ▪ A closed sewage treatment system will treat the effluent, which will then be disposed of in a soak pit or will be used for plantation. The sewage treatment plants will be installed at each respective labor camp based on the number of laborers residing at the respective camp.	Contractor	PMC, CIU	DC

Project Activities	Section	Impact	Mitigation Measures Recommended	Responsibility		Timing
				Execution	Monitoring	
	2.7	Soil erosion and sedimentation	Any drainage structures, culverts or pipes crossing the project site may need to be modified or protected and the detailed designs must make provisions to protect or re-provision all infrastructure that may be affected by the construction works.	Contractor	PMC, CIU	DC
	2.8	Soil Contamination	▪ It will be ensured that spill prevention trays are provided and used during refueling. Also, on-site maintenance of construction vehicles and equipment will be avoided as far as possible. In case on-site maintenance is unavoidable, tarpaulin or other impermeable material will be spread on the ground to prevent contamination of soil. ▪ Regular inspections will be carried out to detect leakages in construction vehicles and equipment and all vehicles will be washed in external commercial facilities. ▪ Fuels, lubricants and chemicals will be stored in covered bounded areas, underlain with impervious lining. Appropriate arrangements, including	Contractor	PMC, CIU	DC

Project Activities	Section	Impact	Mitigation Measures Recommended	Responsibility		Timing
				Execution	Monitoring	
			shovels, plastic bags and absorbent materials will be available near fuel and oil storage areas.			
	2.9	Employment Conflicts	▪ The Construction Contractor will adopt a transparent hiring policy. Prior to the commencement of the construction activity, the local communities in the project areas will be informed of the employment policy in place and number of people that can be employed for this project. ▪ It will be ensured that maximum number of unskilled and semi-skilled jobs will be provided to the residents of Sahiwal & Sialkot city and adjoining areas. ▪ PMU will ensure a balanced process of employment of the communities in the project area with preference given to those most directly affected by the project.	Contractor	PMC, CIU	DC
	2.10	Communicable diseases	A communicable diseases prevention program will be prepared for construction workers or residents near the construction	Contractor	PMC, CIU	DC

Project Activities	Section	Impact	Mitigation Measures Recommended	Responsibility		Timing
				Execution	Monitoring	
			sites.			
	2.11	Vegetation and Wildlife Loss	▪ No hunting or killing of animals will be permitted. ▪ No cutting down of vegetation or using vegetation or trees as firewood will be permitted.	Contractor	PMC, CIU	DC
	2.12	Historical/Archaeological Sites	If evidence of any archaeological remains is found during the construction activities, the excavation work will be stopped immediately and necessary next steps taken to identify the archaeological discovery based on the 'Chance Find' procedures	Contractor	PMC, CIU	DC
Operation Phase	3.1	Noise Generation due to Vehicular Movement	Blowing of horns will be restricted and vehicle speed limits will be fixed and closely monitored to minimize noise levels as far as possible.	O&M Contractor	MC Sahiwal & SWMC	DO
	3.2	Waste water generation	▪ All the waste water will be collected into the septic tank and then will be discharged only into the municipal sewerage drain.	O&M Contractor	MC Sahiwal & SWMC	DO
	3.3	Sludge generation	▪ An efficient and fully functional sludge collection system shall be present throughout the shed premises to ensure any sludge generated is efficiently	O&M Contractor	MC Sahiwal & SWMC	DO

Project Activities	Section	Impact	Mitigation Measures Recommended	Responsibility		Timing
				Execution	Monitoring	
			collected. ▪ A suitable location for disposal of the sludge shall be identified. All sludge collected at the parking shed shall be transported to the designated location for disposal as per international good practices. ▪ The possibility to use the sludge generated from the vehicle within the parking shed premises for use as compost or any other similar environment friendly use will be considered.			
	3.4	Odor Generation	▪ No effluent/used water will be permitted to remain stagnant in the parking sheds premises through an efficient and fully functional drainage system present throughout the sheds. ▪ No hazardous and/or non-hazardous waste, such as oily waste, chemicals used for vehicle washing, engine maintenance fluids etc. will be permitted to remain at the parking sheds premises through efficient	O&M Contractor	MC Sahiwal & SWMC	DO

Project Activities	Section	Impact	Mitigation Measures Recommended	Responsibility		Timing
				Execution	Monitoring	
			housekeeping measures to prevent any odor being released from them. ▪ All vehicle maintenance activities will be conducted in well ventilated facilities that are not enclosed in any way to ensure any odor quickly dissipates into the open environment. ▪ Spraying of disinfectants and odor neutralizing chemicals shall be conducted, if felt necessary, to neutralize any areas within the parking sheds with high levels of odor generation. ▪ Any additional cost effective and efficient measures for odor management will also be implemented, if felt necessary.			
	3.5	Improper disposal of waste generated from office and workshop	Waste will be collected into the containers and municipal solid waste management service vendor will pick it for disposal.	O&M Contractor	MC Sahiwal & SWMC	DO
	3.6	Disease Vector Generation & Transmission	▪ Comprehensive plan must be developed and implemented to spray chemicals into the Parking area at different frequencies throughout the year based on the seasons;	O&M Contractor	MC Sahiwal & SWMC	DO

Project Activities	Section	Impact	Mitigation Measures Recommended	Responsibility		Timing
				Execution	Monitoring	
			▪ Immediate proper washing of vehicles before parking; ▪ Cover the solid waste collection containers used for office and in Parking area ▪ Cover all sewerage drains that carry the sewage from parking sheds area and inject pesticides and/or chemicals as required to minimize/prevent breeding of disease vectors; ▪ Maintain good housekeeping of parking areas; ▪ Include in safety training program for workers, safe handling and personal hygiene practices to minimize exposure to pathogens and vectors; ▪ Provide and require use of suitable personal protective clothing and equipment to prevent contact with waste (e.g. rubber gloves, aprons, boots, etc.). Especially provide prompt medical attention and cover any skin trauma such as cuts and abrasions to prevent infection and use protective clothing and goggles to prevent			

Project Activities	Section	Impact	Mitigation Measures Recommended	Responsibility		Timing
				Execution	Monitoring	
			contact with spray and splashes; ▪ Provide areas for workers to shower and change clothes before leaving work and provide laundry service for work clothes. This practice also helps to minimize chemical and radionuclide exposure; ▪ Encourage workers at Parking Sheds to wash hands frequently.			

PMC : Project Management Consultant
SWMC: Sialkot Waste Management Company
BC : Before Construction
DC : During Construction
CIU : City Implementation Unit
DO : During Operation

Table 7.2: 'Pre-Construction' Environmental Monitoring Plan for Baseline Development

Parameter to be measured	Objective of Monitoring	Parameters to be Monitored	Measurements	Frequency	Responsibility
Parking Shed Farid Town, Shaiwal					

Ambient Air Quality	To establish baseline air quality levels	CO,NO_x & PM_{10} (particulate matter smaller than 10 microns) concentration at receptor level	1-hr and 24-hr concentration levels	Once (befor starting of any construction)	PMC
Ambient Noise	To establish baseline noise levels	Ambient noise level near receptors in project area	A-weighted noise levels – 24 hours, readings taken at 15 s intervals over 15 min. every hour, and then averaged	Once (befor starting of any construction)	PMC
Water Quality	To establish groundwater quality in project area	Groundwater quality in project area	Water sample for comparison against PEQS parameters	Once (befor starting of any construction)	PMC
Parking Shed Mubarak Pura, Sialkot					
Ambient Air Quality	To establish baseline air quality levels	CO,NO_x & PM_{10} (particulate matter smaller than 10 microns) concentration at receptor level	1-hr and 24-hr concentration levels	Once (befor starting of any construction)	PMC
Ambient Noise	To establish baseline noise levels	Ambient noise level near receptors in project area	A-weighted noise levels – 24 hours, readings taken at 15 s intervals over 15 min. every hour, and then averaged	Once (befor starting of any construction)	PMC
Water Quality	To establish groundwater quality in project area	Groundwater quality in project area	Water sample for comparison against PEQS parameters	Once (befor starting of any construction)	PMC
Parking Shed Alama Iqbal Town, Sialkot					

Ambient Air Quality	To establish baseline air quality levels	CO,NO_x & PM_{10} (particulate matter smaller than 10 microns) concentration at receptor level	1-hr and 24-hr concentration levels	Once (befor starting of any construction)	PMC
Ambient Noise	To establish baseline noise levels	Ambient noise level near receptors in project area	A-weighted noise levels – 24 hours, readings taken at 15 s intervals over 15 min. every hour, and then averaged	Once (befor starting of any construction)	PMC
Water Quality	To establish groundwater quality in project area	Groundwater quality in project area	Water sample for comparison against PEQS parameters	Once (befor starting of any construction)	PMC

Table 7.3: Construction Phase Monitoring Requirements

Project Activity and Potential Impact	Objective of Monitoring	Parameters to be Monitored	Measurements	Frequency	Responsibility
Parking Shed Farid Town, Shaiwal					
Noise Disturbance due to noise from construction activity	To determine the effectiveness of noise abatement measures on sound pressure levels	Ambient noise level at different locations in project area	A-weighted noise levels – 24 hours, readings taken at 15 s intervals over 15 min. every hour at 15 m from receptors, and then averaged	Once (after completion of 1st quarter)	Contractor's Environmental officer, PMC
Air Quality Dust emissions from construction vehicles and equipment	To determine the effectiveness of dust control program on dust at receptor level	CO,NO_x & PM_{10} (particulate matter smaller than 10 microns) concentration at receptor level	1-hr and 24-hr concentration levels	Once (after completion of 1st quarter)	Contractor's Environmental officer, PMC

Project Activity and Potential Impact	Objective of Monitoring	Parameters to be Monitored	Measurements	Frequency	Responsibility
		Visible dust	Visual observation of size of dust clouds, their dispersion and the direction of dispersion	Once (after completion of 1st quarter)	Contractor's Environmental officer, PMC
Safety precautions by Safety workers	To prevent accidents for workers and general public	Number of near miss events and accidents taking place	Visual inspections	Daily	Contractor's Environmental officer, PMC
Solid Waste & Effluent disposal Insufficient procedures for waste collection, storage, transportation and disposal	To check the availability of waste management system and implementation	Inspection of solid and liquid effluent generation, collection, segregation, storage, recycling and disposal will be undertaken at all work sites in project area	Visual inspections	Daily	Contractor's Environmental officer, PMC
Parking Shed Mubarak Pura, Sialkot					
Noise Disturbance due to noise from construction activity	To determine the effectiveness of noise abatement measures on sound pressure levels	Ambient noise level at different locations in project area	A-weighted noise levels – 24 hours, readings taken at 15 s intervals over 15 min. every hour at 15 m from receptors, and then averaged	Once (after completion of 1st quarter)	Contractor's Environmental officer, PMC
Air Quality Dust emissions from construction vehicles and equipment	To determine the effectiveness of dust control program on dust at receptor level	CO,NO_x & PM_{10} (particulate matter smaller than 10 microns) concentration at receptor level	1-hr and 24-hr concentration levels	Once (after completion of 1st quarter)	Contractor's Environmental officer, PMC

Project Activity and Potential Impact	Objective of Monitoring	Parameters to be Monitored	Measurements	Frequency	Responsibility
		Visible dust	Visual observation of size of dust clouds, their dispersion and the direction of dispersion	Once (after completion of 1st quarter)	Contractor's Environmental officer, PMC
Safety precautions by Safety workers	To prevent accidents for workers and general public	Number of near miss events and accidents taking place	Visual inspections	Daily	Contractor's Environmental officer, PMC
Solid Waste & Effluent disposal Insufficient procedures for waste collection, storage, transportation and disposal	To check the availability of waste management system and implementation	Inspection of solid and liquid effluent generation, collection, segregation, storage, recycling and disposal will be undertaken at all work sites in project area	Visual inspections	Daily	Contractor's Environmental officer, PMC
Parking Shed Alama Iqbal Town, Sialkot					
Noise Disturbance due to noise from construction activity	To determine the effectiveness of noise abatement measures on sound pressure levels	Ambient noise level at different locations in project area	A-weighted noise levels – 24 hours, readings taken at 15 s intervals over 15 min. every hour at 15 m from receptors, and then averaged	Once (after completion of 1st quarter)	Contractor's Environmental officer, PMC
Air Quality Dust emissions from construction vehicles and equipment	To determine the effectiveness of dust control program on dust at receptor level	CO,NO_x & PM_{10} (particulate matter smaller than 10 microns) concentration at receptor level	1-hr and 24-hr concentration levels	Once (after completion of 1st quarter)	Contractor's Environmental officer, PMC

Project Activity and Potential Impact	Objective of Monitoring	Parameters to be Monitored	Measurements	Frequency	Responsibility
		Visible dust	Visual observation of size of dust clouds, their dispersion and the direction of dispersion	Once (after completion of 1st quarter)	Contractor's Environmental officer, PMC
Safety precautions by Safety workers	To prevent accidents for workers and general public	Number of near miss events and accidents taking place	Visual inspections	Daily	Contractor's Environmental officer, PMC
Solid Waste & Effluent disposal Insufficient procedures for waste collection, storage, transportation and disposal	To check the availability of waste management system and implementation	Inspection of solid and liquid effluent generation, collection, segregation, storage, recycling and disposal will be undertaken at all work sites in project area	Visual inspections	Daily	Contractor's Environmental officer, PMC

Table 7.4: 'Operation Phase' Environmental Monitoring Plan

Parameter to be measured	Objective of Monitoring	Parameters to be Monitored	Measurements	Location	Frequency	Responsibility
Noise Disturbance due to noise from vehicular movment	To determine the effectiveness of noise abatement measures on sound pressure levels	Ambient noise level at different locations in project area	A-weighted noise levels – 24 hours, readings taken at 15 s intervals over 15 min. every hour at 15 m from receptors, and then averaged	At all three project construction sites	Bi-Annual	MC Shaiwal & SWMC

Air Quality Dust emissions from Vehicles movment	To determine the effectiveness of dust control program on dust at receptor level	CO,NO_x & PM_{10} (particulate matter smaller than 10 microns) concentration at receptor level	1-hr and 24-hr concentration levels	At all three project construction sites	Bi-Annual	MC Shaiwal & SWMC

Table 7.5: Capacity Development and Training Programme

Provided by	Organized by	Contents	No. of training events	Duration	Cost (PKR)
Pre-construction Phase Monitoring Consultants/Organizations offering specialized services in environmental management and monitoring	CIU & PMU	Short seminars and courses on: Environmental Management Plan and Environmental Monitoring Plan	One seminar for Contractor management staff and project staff	1 day	100,000
Construction Phase Monitoring Consultants/Organizations offering specialized services in social management and monitoring	CIU & PMU	Short seminars on Environmental risks associated with construction phase. Development of Environmental Performance Indicators Occupational Health and Safety (OHS)	One seminar for Contractor management staff and project staff dealing in environment and social issues	1 day	100,000

		issues			
Total			**200,000 (PKR 0.2 million)**		

7.8 Environmental Management Costs

393. The Table 7.7 below provides cost estimates for 'Pre-Construction phase' monitoring while Tables 7.7 and 7.8 provides cost estimates for 'Construction phase' and 'Operation phase' monitoring of key environmental parameters.

394. The costs associated with implementation of the EMP and the necessary mitigation measures are provided as Table 7.9 below. The Table 7.10 below provides the 'Capacity development and training programme' for project contractors for the proposed project.

Table 7.6: Cost Estimates for 'Pre-Construction Phase' Environmental Monitoring[15]

Monitoring Component	Parameters	Quantity	Amount PKR	Details
Mubarak Pura Sialkot				
Air Quality	CO, NOx, PM_{10}	1	30,000	1 reading @ PKR 30,000 per sample
Noise Levels	dB(A)	1	5,000	1 readings @ PKR 5000 per reading
Water Quality	Physiochemical, Chemical & Biological	1	16,000	1 readings @ PKR 16,000 per reading
Allama Iqbal Town Sialkot				
Air Quality	CO, NOx, PM_{10}	1	30,000	1 reading @ PKR 30,000 per sample
Noise Levels	dB(A)	1	5,000	1 readings @ PKR 5000 per reading
Water Quality	Physiochemical, Chemical & Biological	1	16,000	1 readings @ PKR 16,000 per reading
Farid Town Sahiwal				
Air Quality	CO, NOx, PM_{10}	1	30,000	1 reading @ PKR 30,000 per sample
Noise Levels	dB(A)	1	5,000	1 readings @ PKR 5000 per reading
Water Quality	Physiochemical, Chemical & Biological	1	16,000	1 readings @ PKR 16,000 per reading
Contingencies			5,000	5% of monitoring cost
Total (PKR)			**158,000**	

[15] For air quality monitoring: 'Passive samplers' such as test tubes can be used or 'Active samplers' with sorbent turbes can also be used.

For noise monitoring: sampling equipment with duration greater than 1 hour can be used.

Table 7.7: Cost Estimates for 'Construction Phase' Environmental Monitoring

Monitoring Component	Parameters	Quantity	Amount PKR	Details
Mubarak Pura Sialkot				
Air Quality	CO, NOx, PM_{10}	1	30,000	1 reading @ PKR 30,000 per sample
Noise Levels	dB(A)	1	5,000	1 readings @ PKR 5000 per reading
Water Quality	Physiochemical, Chemical & Biological	1	16,000	1 readings @ PKR 16,000 per reading
Allama Iqbal Town Sialkot				
Air Quality	CO, NOx, PM_{10}	1	30,000	1 reading @ PKR 30,000 per sample
Noise Levels	dB(A)	1	5,000	1 readings @ PKR 5000 per reading
Water Quality	Physiochemical, Chemical & Biological	1	16,000	1 readings @ PKR 16,000 per reading
Farid Town Shaiwal				
Air Quality	CO, NOx, PM_{10}	1	30,000	1 reading @ PKR 30,000 per sample
Noise Levels	dB(A)	1	5,000	1 readings @ PKR 5000 per reading
Water Quality	Physiochemical, Chemical & Biological	1	16,000	1 readings @ PKR 16,000 per reading
Contingencies			5,000	5% of monitoring cost
Total (PKR)			**158,000**	

Table 7.8: Annual Cost Estimates for 'Operation Phase' Environmental Monitoring

Monitoring Component	Parameters	Quantity	Amount PKR	Details
Mubarak Pura Sialkot				
Air quality	PEQS	2 (bi-annual basis)	60,000	2 readings @ PKR 30,000 per sample
Noise	PEQS	2 (bi-annual basis)	10,000	2 readings @ PKR 5000 per reading
Allama Iqbal Town Sialkot				
Air quality	PEQS	2 (bi-annual basis)	60,000	2 readings @ PKR 30,000 per sample
Noise	PEQS	2 (bi-annual basis)	10,000	2 readings @ PKR 5000 per reading

Farid Town Sahiwal				
Air quality	PEQS	2 (bi-annual basis)	60,000	2 readings @ PKR 30,000 per sample
Noise	PEQS	2 (bi-annual basis)	10,000	2 readings @ PKR 5000 per reading
Contingencies			10,000	5% of monitoring cost
Total (PKR)			**220,000**	

Table 7.9: Estimated Costs for EMP Implementation

Item	Sub-Item	Estimated Total Cost (PKR)
Staff, audit and monitoring cost[1]	1 person for 6 months (@ 80,000 per month)	**480,000**
Monitoring Activities	Provided separately in Tables 7.7 and 7.8.	-
Mitigation Measures	As prescribed under EMP and IEE.	**1,217,000**
PPEs		**377,000**
(i) Water sprinkling	To suppress dust emissions	15000
(ii) Solid waste collection & disposal	From construction sites (based on initial estimates)	125,000
(iii) Plantation around project boundary to control odor levels	To plant vegetation all along the boundaries to limit odor emissions	200,000
(iv) Chemicals/pesticides to prevent/minimize disease vector generation	Chemicals to be injected into the influent streams in order to minimize/prevent disease vector generation	500,000
Contingencies	5% of EMP implementation cost	95,000
Total Estimated Cost (PKR)		**1,312,000**

1: To cover staff cost and expenses of Environmental Specialist for Contractor

Table 7.10: Capacity Development and Training Programme for Project Contractor(s)

Provided by	Organized by	Contents	Target Audience	Venue	Duration
Pre-construction Phase PMC offering specialized services in environmental management and monitoring	CIU & PMC	Short seminars and courses on: Environmental Management Plan and Environmental Monitoring Plan	Contractor staff	CIU Office, Sahiwal/Sialkot	One day long training seminar
Construction Phase PMC offering specialized services in social management and monitoring	CIU & PMC	Short seminar on Environmental risks associated with construction phase. Development of Environmental Performance Indicators Occupational Health and Safety (OHS) issues	Contractor staff	CIU Office, Sahiwal/Sialkot	One day long training seminar

8 Public Consultation and Information Disclosure

395. Details on the public consultations conducted are provided below with the pictorial evidences and persons consulted provided as **Annexure A**.

8.1 Approach

396. The following approach was adopted for conducting due diligence to assess the potential impacts from the proposed works:

- Review of available information including SPS 2009, project design components;
- Field site visits along with the design team to identify and assess project impacts;
- Public consultations with the travellers, educational & health institutions in the proximity of project site to seek their views on the project and to discuss probable project impacts and mitigation measures.

397. Public consultations included meetings and interviews with the general public and other stakeholders. The consultation was carried out in accordance with the IR policy requirements of ADB's SPS 2009 and its outcome is discussed in the proceeding sections. Consultations were also held with the PMU, Local Government Board and the design consultants.

398. In this regard, a total of 12 focus group discussions (FGDs) were conducted in the project area of Sahiwal; of which 08 were conducted with male participants and 04 were conducted with female participants. While in Sialkot 17 FGDs were conducted in the project area of which 12 were conducted with male participants and 05 were conducted with female participants.

8.2 Information Disclosure and Consultation

8.2.1 Scope of Consultations

399. Discussions and consultations on social safeguard aspects of project were held with the educational, health institutions PMU team, CIU team, travelers, students, community in proximity of the project sites in Sahiwal and Sialkot, and design consultants during the month of February & March 2021. During the consultations, participants were requested to express their concerns with the proposed Parking Sheds and suggestions or measures that can address potential consequences and enhance project benefits. During the consultation meetings,

participants were informed about the Parking Sheds, scope of the project and its various components. They were also informed about the stakeholder's involvement and their roles and responsibilities in this project. The importance of Grievance Redress Mechanism (GRM) and the role of community in GRM was also the agenda of consultations.

8.2.2 General Response Regarding Construction of Parking Sheds

400. The meeting participants were aware of the proposed establishment of parking sheds in their area. The present project was enthusiastically welcomed during all the FGDs, largely because the construction of Parking Sheds will provide protection to the equipment's /machinery of Solid Waste from the solar radiation, Ultraviolet rays, rain, hail, wind, and dust. All these protection measurements are necessary for the long-life and effective working of the Solid Waste Machinery (SWM).

- Stakeholders at a majority of the subproject areas did not foresee any adverse impact of the proposed Parking Sheds establishment in the city.
- The workshop and the service stations in parking sheds will also serve as maintenance hub of these vehicles.
- Lack of accessible Parking can destroy the vehicles and ultimately the money of public/ Govt.
- The parking sheds are being constructed to strengthen the MCs of both cities, now MCs should also enhance the quality of their services regarding management of solid waste in the city.
- Currently, the site proposed for parking sheds in Sahiwal is an old/non-functional Disposal station which is causing many olfaction related issues for the surrounding residents. It will be good alternate if the land use of the said place is going to change. While in Sialkot, site proposed for parking shed in Mubarakpura is filled with stagnant water and solid waste, which is causing bad odor in the area. Construction of Parking Shed is a good use of this land although SWM is also good imitative which can clean surroundings also.
- Create signs, brochures and information resources indicating parking availability.
- During the consultations, participants were requested to identify concerns with the proposed Parking Shed measures and suggestions or measures that can address potential pitfalls and enhance project benefits.

- Of the major issues with the Parking facility in MC is the inadequacy of the space for parking. The drivers are parking the vehicles in the store of MC and in the open areas as well. Mini tippers are being parked at the bicycle stand of the MC at night. There is no proper system to wash the machinery in order to maintain its cleanliness.
- Both male and female representatives stressed the need for using good quality construction materials that match the parking sheds requirements. In this regard, meeting participants urged for monitoring of the contractors' use of raw materials and workmanship to ensure compliance to contractual obligations and sustainable works. Moreover, community representatives from some of the sections of Fareed Town in Sahiwal and Iqbal Town in Sialkot has expressed their willingness to collaborate with the authorities for joint construction activities, while participants from other sections complained regarding generally non-cooperative behavior of the contractors' teams.
- The Grievance Redress Mechanism that provides a mechanism for local communities to register their grievances regarding planned works. The contractors will be able to use the GRC to maintain a healthy dialogue and cooperation from local communities as and when required.
- It was proposed in several meetings that the contract documents require contractors to employ local workers. This is a normal condition in the bidding documents, the bidding documents will provide clauses designed to ensure that all civil works contractors comply with applicable labour laws; do not employ child labour or forced labour; and encourage the employment of the poor.

8.2.3 Gender Responses/Issues

401. The issues discussed were as follows:

- The movement of the vehicles should be controlled and a proper check and balance should be launched in order to smoothly run the functions of Parking sheds.
- The surrounding population should not be disturbed by the unnecessary horns of the vehicles.
- The growth of plants should be considered in the parking shed so that the impacts of fuel emissions over the environment can be mitigated.

- Concerted efforts must be made to include women in the project implementation team if gender elements are to be effectively incorporated in project planning and execution.
- Women consulted at the project site showed serious concerns about restricting their movement due to movement of labor force during construction.
- The construction contractor will make sure that the movement of the labor force is confined within the construction camp and walking/movement routes and passages of the passerby especially women/handicapped of the nearby localities are open and are not blocked.

8.2.4 Recommendations

402. The recommendations made by the stakeholders were as follows:

- Public safety should be on top priority during construction.
- The traffic should be managed properly during the execution of the project.
- There should be an effective arrangement for the washing of SWM vehicles to avoid the odour, good housekeeping should also be in place during construction activity
- The contractor should comply with the mitigation measures proposed in the Environmental and Management and Monitoring Plan (EMMP) and HSE compliance policy.
- Contractor's activities should be confined to minimize any inconvenience to the public.
- Dust produced due to construction activities may create different health problems, therefore water sprinkling should be carried out regularly to suppress the dust emissions;
- During construction, labour force movement should be controlled so that activities of the community are not disturbed;
- The participants/representatives also stressed the need for timely completion of the project.
- The movement of the heavy machinery should be controlled to avoid harm to other associated properties/structures;
- Grievance redressal mechanism (GRM) at the PMU level should be formalized to address any complaints from the stakeholders at site.

- Awareness campaigns by using print, electronic and social media are highly required to create civic sense among masses.

9 Grievance Redressal Mechanism

9.1 General

403. The ADB Policy (SPS 2009) requires establishment of a local grievance redress mechanism to receive and facilitate resolution of the Displaced/Affected Persons concerns and grievances regarding the project's social and environment performance. The measures have been identified to mitigate any potential environmental and social impacts to be caused due to implementation of the Parkin Sheds work.

404. However, in spite of best efforts, there is every chance that the individuals / households affected by the project or other stakeholders are dissatisfied with measures adopted to address adverse social impacts of the project. To address, such situation an effective Grievance Redress Mechanism (GRM) will be established to ensure timely and successful implementation of the project. It will also provide a public forum to the aggrieved to raise their objections and the GRM would address such issues adequately. It will receive, evaluate and facilitate the resolution of displaced persons' concerns, complaints and grievances about the social and environmental performance at the level of the project.

405. The GRM will aim to investigate charges of irregularities and complaints receive from any displaced persons and provide a time-bound early, transparent and fair resolution to voice and resolve social and environmental concerns link to the project.

406. The PIU shall make the public aware of the GRM through public awareness campaigns. The name of contact person(s) and his/her phone number, PMU contact numbers will serve as a hotline for complaints and shall be publicized through the media and placed on notice boards outside their offices, construction camps of contractors, and at accessible and visible locations in the project area. The project information brochure will include information on the GRM and shall be widely disseminated throughout the project area. Grievances can be filed in writing, via web-based provision or by phone with any member of the PIU.

407. First tier of GRM. The PIU is the first tier of GRM which offers the fastest and most accessible mechanism for resolution of grievances. The PIU staff for environment and social safeguards will be designated as the key officers for grievance redressal. Resolution of complaints will be completed within seven (7) working days. Investigation of grievances will involve site visits and consultations

with relevant parties (e.g., affected persons, contractors, traffic police, etc.). Grievances will be documented and personal details (name, address, date of complaint, etc.) will be included, unless anonymity is requested. A tracking number will be assigned for each grievance, including the following elements:

- Initial grievance sheet (including the description of the grievance), with an acknowledgement of receipt handed back to the complainant when the complaint is registered;
- Grievance monitoring sheet, mentioning actions taken (investigation, corrective measures);
- Closure sheet, one copy of which will be handed to the complainant after he/she has agreed to the resolution and signed-off.

408. The updated register of grievances and complaints will be available to the public at the PIU office, construction sites and other key public offices in the project area. Should the grievance remain unresolved, it will be escalated to the second tier.

409. **Second Tier of GRM.** The PIU will activate the second tier of GRM by referring the unresolved issue (with written documentation) who will pass unresolved complaints upward to the Grievance Redress Committee (GRC). The GRC will be established before start of site works. The GRC will consist of the following persons: (i) Project Director; (ii) representative District; (iii) representative of the affected person(s); (iv) representative of the local Deputy Commissioners office (land); and (v) representative of the PEPA (for environmental-related grievances). A hearing will be called with the GRC, if necessary, where the affected person can present his/her concerns/issues. The process will facilitate resolution through mediation. The local GRC will meet as necessary when there are grievances to be addressed. The local GRC will suggest corrective measures at the field level and assign clear responsibilities for implementing its decision within fifteen (15) working days. The contractor will have observer status on the committee. If unsatisfied with the decision, the existence of the GRC will not impede the complainant's access to the Government's judicial or administrative remedies.

410. The functions of the local GRC are as follows: (i) resolve problems and provide support to affected persons arising from various environmental issues and including dust, noise, utilities, power and water supply, waste disposal, traffic interference and public safety as well as social issues and land acquisition (temporary or permanent); asset acquisition; and eligibility for entitlements, compensation and assistance; (ii) reconfirm grievances of displaced persons, categorize and prioritize them and aim to

provide solutions within a month; and (iii) report to the aggrieved parties about developments regarding their grievances and decisions of the GRC.

411. The PIC officers will be responsible for processing and placing all papers before the GRC, maintaining a database of complaints, recording decisions, issuing minutes of the meetings and monitoring to see that formal orders are issued and the decisions carried out.

412. **Third tier of GRM.** In the event that a grievance cannot be resolved directly by the PIU (first tier) or GRC (second tier), the affected person can seek alternative redressal through the district or sub-district committees as appropriate. The PIUs or GRC will be kept informed by the district, municipal or national authority. The grievance redress mechanism and procedure are depicted in the **Figure 8.1 below.** The monitoring reports of the EMP and RP implementation will include the following aspects pertaining to progress on grievances: (i) Number of cases registered with the GRC, level of jurisdiction (first, second and third tiers), number of hearings held, decisions made, and the status of pending cases; and (ii) lists of cases in process and already decided upon may be prepared with details such as Name, ID with unique serial number, date of notice, date of application, date of hearing, decisions, remarks, actions taken to resolve issues, and status of grievance (i.e., open, closed, pending).

413. In order to provide greater clarity, the pictorial description of the GRM is provided in **Figure 8.1** below.

Figure 8.1: Grievance Redressal Mechanism

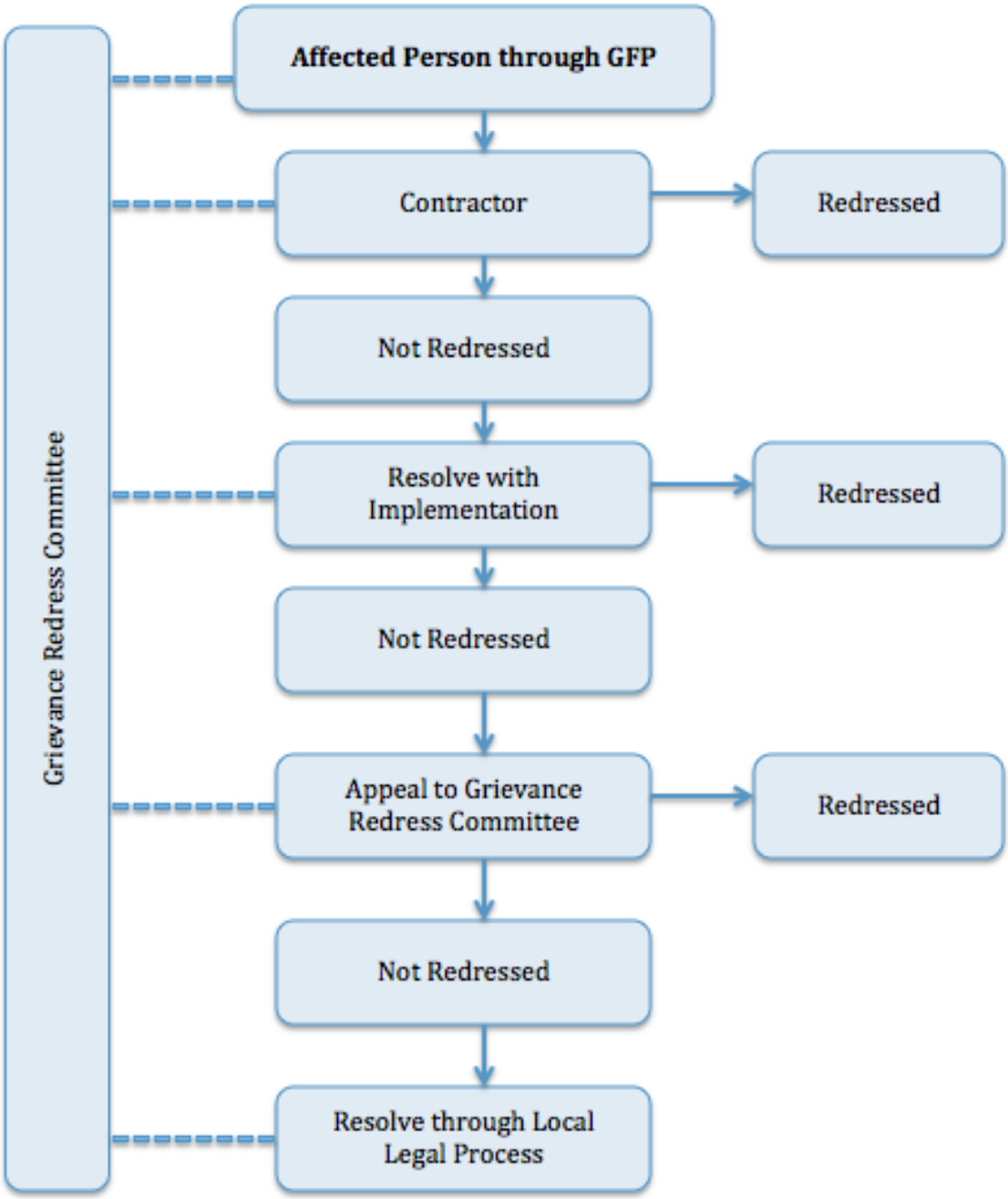

10 Conclusion and Recommendations

414. Due diligence visits were conducted to the project sites and to the project areas in general where the proposed Parking Sheds work in Farid Twon, Sahiwal, Muabark Pura and Alama Iqbal Town, Sialkot are to be conducted. Based on the findings of these visits, this IEE document has been prepared in order to update the existing umbrella IEE report.

415. Since the impact analysis presented earlier in the umbrella IEE report was quite generic and briefly covered all projects to be implemented in Sahiwal and Sialkot city, thus a comprehensive yet focused impact analysis and EMP specifically for the proposed Parking Sheds work has been prepared as part of this IEE report.

416. The EMP contained within this IEE document is considered sufficient for issuance as part of the Contracts to the successful bidder(s) and for subsequent use during the project works for the two Lots. It should be mentioned that prior to the commencement of works, this EMP must be further updated by the Contractor for into site specific EMPs (SSEMPs) for review and approval of ADB. In this SSEMPs, aspects such as a detailed traffic management plan, identification of locations for disposal of debris and spoil and any other details which shall become available later must be included for efficient implementation of all proposed mitigation measures and the subsequent monitoring of these measures.

417. This IEE document is considered sufficient to proceed with commencement of the required works.

ANNEXURES

Annexure A

Photographs of Public Consultations

Consultation with Project Area Community on Capital Road, Sialkot

Consultation with Project Area Community at UC Mubarakpura, Sialkot

Consultation with Project Area Community at Alama Iqbal Town, Sialkot

Consultation with Project Area Community at Fareed Town, Saihwal

Consultation with Project Area Community at Fareed Town, Saihwal

Consultation with Project Area Community at Fareed Town, Saihwal

Punjab Intermediate Cities Improvement Investment Program (PICIIP)

ATTENDANCE SHEET

Subject: Consultations Regarding the Establishment of Parking Sheds at Sialkot. **Date:** 03-03-21 **At:** CTU Sialkot

List of Participants:

Sr. No.	Name	Designation	Cell No.	Signature
1	Neha Jabeen	B.W	03060607139	Neha Jabeen
2	Menal	Student	03045702796	Menal
3	Gulnar Nasreen	Teacher		Gulnar Nasreen
4	Misha	Student		Misha
5	Ayesha	Housewife		Ayesha
6	Kainat	Student		Kainat
7	Alia	Student		Alia
8	Nimra Mubeen	Teacher		Nimra Mubeen
9				
10				
11				
12				
13				
14				
15				

Punjab Intermediate Cities Improvement Investment Program (PICIIP)

ATTENDANCE SHEET

Subject: Consultation Session with AP's for Establishment of Parking Shed **Date:** 3/3/21 **At:** Capital Rd.

List of Participants:

Sr. No.	Name	Designation	Cell No.	Signature
1	M. Ali	Labour	03349745204	
2	Salam	Forman	0322 7454620	Salam
3	Nawaz	Worker	03086410228	نواز
4	Razaq	"	03416870779	
5	Zaman	"	03076240873	زمان
6				
7				
8				
9				
10				

1 of 4

Punjab Intermediate Cities Improvement Investment Program (PICIIP)

ATTENDANCE SHEET

Subject: Consultation with APIs for Establishment of Parking shed **Date:** 3/3/21 **At:** Capital Rd

List of Participants:

Sr. No.	Name	Designation	Cell No.	Signature
1	Dildar	Labour	0349605659	Dildar
2	Manzoor	Worker	0342[illegible]8638	
3	Asghar	[illegible]	0331084503	
4	Tahir	Shop Keeper	0346744937	Tahir
5				
6				
7				
8				
9				
10				

Punjab Intermediate Cities Improvement Investment Program (PICIIP)

ATTENDANCE SHEET

Subject: Consultation with APIs for Establishment of Parking shed **Date:** 4/3/21 **At:** UC Mukhtarpura Malik Street

List of Participants:

Sr. No.	Name	Designation	Cell No.	Signature
1	Waseem	Worker	03338625083	
2	Adil	Shopkeeper	0341-6773855	
3	Umer	Businessman	0305-8571146	
4	Iftikar Ali	//	03079555481	
5	Abdus salam	Worker	03217211899	
6				
7				
8				
9				
10				

Punjab Intermediate Cities Improvement Investment Program (PICIIP)

ATTENDANCE SHEET

Subject: Consultation with Aps of Fareed Town Regarding the establishment of Parking Sheds in Sahiwal Date: 17/2/21 At: Leap Academy Fareed Town Sahiwal

List of Participants:

Sr. No.	Name	Designation	Cell No.	Signature
1	Aitzaz Saif	Campus Manager	0300-6979693	
2	Faisal Tullah	Manager	0306 7179533	
3	Hameed Asghar	IT Incharge	0303-9388037	
4	Rizwan Ali	Class Incharge	0311-6276636	
5	Imdad Ali	Supervisor	0302 4872689	
6	Usman	Office Boy	0300-0972021	
7	Shahzad	Security Guard	0302-3581280	
8	Hafiz Adeel	Lecturer	0312 6906258	
9	Khalid	Job	0321 7209388	
10	Abdurahman	Supervisor	0321 6927652	
11				
12				
13				
14				
15				
16				
17				
18				
19				
20				
21				
22				
23				
24				
25				
26				
27				
28				
29				

Punjab Intermediate Cities Improvement Investment Program (PICIIP)

ATTENDANCE SHEET

Subject: Consultation with APs of Fareed Town Regarding the establishmen of parking sheds Date: 17/2/21 At: Leap Acddemy Fareed Town in Sahiwal

List of Participants:

Sr. No.	Name	Designation	Cell No.	Signature
1	Fatima	Student	—	Fatima
2	EEsha Tariq	//	—	Esha
3	Laiba	//	—	Laiba
4	Meerab	//	—	meerab
5	Hayya Fatima	//	—	Hayya
6	Fizza Noor	//	—	[illegible]
7	Areeba Saad	//	—	Areeba
8				
9				
10				
11				
12				
13				
14				
15				
16				
17				
18				
19				
20				
21				
22				
23				
24				
25				
26				
27				
28				
29				

Punjab Intermediate Cities Improvement Investment Program (PICIIP)

ATTENDANCE SHEET

Subject: Consultation with APs of Fareed Town Regarding the establishment of parking sheds in Sahiwal Date: 7/2/21 At: Stop No 4 Fareed Town

List of Participants:

Sr. No.	Name	Designation	Cell No.	Signature
1	M. Iqbal	Shop Keeper	03014334085	
2	Allah Ditta	painter	03046443715	
3	Jahanzaib	Shopkeeper	03136903644	
4	Imran	Shopkeeper	03016911276	
5	Shabaz	property off	03086509220	
6	waqas	General store	03208685141	
7	Ali Haider	Shop Keeper	03182137973	
8	Asgher	Job	03065267399	Asgher
9				
10				
11				
12				
13				
14				
15				
16				
17				
18				
19				
20				
21				
22				
23				
24				
25				
26				
27				
28				
29				

Annexure B

Environment Screening & Categorization Forms (ESCF)

Punjab Intermediate City Improvement Investment Project (PICIIP)

Environment Screening & Categorization Form (ESCF)

Instructions:

(i) The PIU staff shall complete this form to support the environmental categorization of a project and submit to the ADB for verification and approval.

(ii) This checklist focuses on environmental issues and concerns. To ensure that the Social dimensions are adequately considered, refer also to the Checklists on involuntary resettlement and Indigenous Peoples.

(iii) This form is to be completed assuming the "without mitigation" case. The purpose is to identify potential impacts.

1. Project Name: Construction of Covered Parking Shed for Solid Waste Machinery in Shaiwal City.

2. Project Scope of Work (list the major interventions): The project involves establishment of Parking shed on total area of 18.27 kanals at Fareed Town for 42 nos. of vehicles that include construction of steel prefabricated sheds, 6'-0" high boundary wall, open service station, work shop, office building and installation of CCTV cameras.

3. Project Location /Administrative Boundary: Fareed Town, Sahiwal.

4. Total Project Cost (million PKR)[16]: Rs. 71,793,397/-

5. Project GPS Co-ordinates[17]/ 30^0 667389 N, 73^0 075527 E

6. The proposed project activity is NOT listed in the Prohibited Investment Activities List (PIAL) (please refer to Annexure I below).

☑ **YES** ☐ **No**

Based on mapping of GPS Co-ordinates onto Google Earth (Annexure II), please respond to the following:

7. Is the project site(s) located adjacent to or within any environmentally sensitive areas (National Park, Protected Area, Buffer zone of Protected Area, Wetland, Mangrove?) If so, provide details and explain the potential risks to the sensitive areas from the proposed project activities:

S.No	Issues	Yes	NO
1.	Is the sub-project area adjacent to or within the cultural heritage site?		√
2.	Is the sub-project area adjacent to or within environmentally protected area?		√
3.	Is the sub-project area adjacent to or within Wetland?		√
4.	Is the sub-project area adjacent to or within the Forest?		√
5.	Is the sub-project area adjacent to or within Biodiversity hotspot?		√
6.	Is the sub-project area adjacent to or within Buffer zone of protected area		√

8. Is project(s) located in a densely populated area(s)? ☑ **YES** ☐ **No**

[16] Required to assess categorization under Pak EPA guidelines

[17] In case of cluster of projects, please provide GPS Co-ordinates for each project location

9. If YES to the above, use the satellite imagery to identify the numbers and types (as far as possible) of sensitive receptors (SR) below:

SR Type 1: School/Academy **Approx. Number of SR1:** 03

SR Type 2: Mosque **Approx. Number of SR2:** 03

SR Type 3: Hospital/Clinic **Approx. Number of SR3:** 0

SR Type 4: Public Building/ Govt. Office **Approx. Number of SR4:** 0

SR Type 5: Graveyard/Shrine **Approx. Number of SR5:** 03

SR Type 6: Church **Approx. Number of SR6:** 02

10. Will the proposed project activity require dislocation of people? If so, please mention the estimated number of people to be displaced.

NO

11. Will any land acquisition be required for the proposed project activity? If so, please provide details.

NO

12. Please provide details of any significant expected impacts (''without mitigation'' case) due to the proposed project activities on the identified sensitive receptors:

S.No	Type of expected impact	Details on Severity of expected impacts
1	Generation of high dust levels in sensitive areas during construction.	High
2	High noise levels in sensitive areas due to blasting and civil works.	Medium
3	Occupational and community health and safety risks.	Minimal
4	Impact on water bodies due to disposal of chemicals/oils/lubricants and other hazardous/semi-hazardous substances.	No
5	Risks to community health and safety caused by (any or all of the below) (i) Management and disposal of waste and/or (ii) Civil or electrical works and/or (iii) Accidental and natural hazards, particularly where structural elements or components of project are accessible to members of affected community and/or (iv) Fire, electric shock or failure of civil structures during operation.	Medium
6	Generation of disease vectors due to project activities.	Minimal

7	Depletion and/or Contamination of ground water reservoirs due to leaching of chemicals, oil, lubricants and other hazardous/semi-hazardous substances.	No
8	Improper sanitation and solid waste disposal systems.	Minimal
9	Degradation of land and ecosystem (e.g. loss of wetlands and wild lands, coastal zones, watersheds and forests).	Medium
10	Road blocking and temporary flooding due to land excavation during rainy season.	Medium
11	Dislocation or involuntary resettlement of people.	No
12	Impacts on vulnerable groups such as the poor, women and children and indigenous peoples.	No
13	Degradation of cultural property and loss of cultural heritage and tourism reserves.	No
14	Impact on Flora and Fauna, particularly on any endangered species located in project area(s).	Medium
15	Social conflicts	Minimal

Project Category Recommendation

13. It is recommended that based on the available project information and subsequent analysis, the project should be placed in (please tick one):

☐ **Category 'A'** ☑ **Category 'B'** ☐ **Category 'C'**

14. Please provide an explanation to justify the Categorization above:
Severity of expected impacts as evident from above table are less adverse and few site specific impacts irreversible and as per ADB Safeguard Policy, a project is classified as category B if it is likely to have few site specific adverse environmental impacts.

Screening & Categorization Conducted by:

_____
Environment Officer, PMU

Endorsed by:

_____
Head of PMU

Approved by:

_____
ADB Environment Safeguards Focal Point

Endorsed by:

_____
Project Officer, ADB

ANNEXURE I –Prohibited Investment Activities List (PIAL)

The following do not qualify for ADB financing:

(i) Production or activities involving harmful or exploitative forms of forced labor[18] or child labor;[19]
(ii) Production of or trade in any product or activity deemed illegal under host country laws or regulations or international conventions and agreements or subject to international phase outs or bans, such as (a) pharmaceuticals,[20] pesticides, and herbicides,[21] (b) ozone-depleting substances,[22] (c) polychlorinated biphenyls[23] and other hazardous chemicals,[24] (d) wildlife or wildlife products regulated under the Convention on International Trade in Endangered Species of Wild Fauna and Flora,[25] and (e) transboundary trade in waste or waste products;[26]
(iii) Production of or trade in weapons and munitions, including paramilitary materials;
(iv) Production of or trade in alcoholic beverages;[27]
(v) Production of or trade in tobacco;[28]
(vi) Gambling, casinos, and equivalent enterprises;[29]
(vii) Production of or trade in radioactive materials,[30] including nuclear reactors and components thereof;
(viii) Production of, trade in, or use of unbonded asbestos fibers;[31]
(ix) Commercial logging operations or the purchase of logging equipment for use in primary tropical moist forests or old-growth forests; and

(x) Marine and coastal fishing practices, such as large-scale pelagic drift net fishing and fine mesh net fishing, harmful to vulnerable and protected species in large numbers and damaging to marine biodiversity and habitats.

[18] Forced labor means all work or services not voluntarily performed, that is, extracted from individuals under threat of force or penalty.

[19] Child labor means the employment of children whose age is below the host country's statutory minimum age of employment or employment of children in contravention of International Labor Organization Convention No. 138 "Minimum Age Convention" (www.ilo.org).

[20] A list of pharmaceutical products subject to phaseouts or bans is available at http://www.who.int.

[21] A list of pesticides and herbicides subject to phaseouts or bans is available at http://www.pic.int.

[22] A list of the chemical compounds that react with and deplete stratospheric ozone resulting in the widely publicized ozone holes is listed in the Montreal Protocol, together with target reduction and phaseout dates. Information is available at http://www.unep.org/ozone/montreal.shtml.

[23] A group of highly toxic chemicals, polychlorinated biphenyls are likely to be found in oil-filled electrical transformers, capacitors, and switchgear dating from 1950 to 1985.

[24] A list of hazardous chemicals is available at http://www.pic.int.

[25] A list is available at http://www.cites.org.

[26] As defined by the Basel Convention; see http://www.basel.int.

[27] This does not apply to subproject sponsors who are not substantially involved in these activities. Not substantially involved means that the activity concerned is ancillary to a subproject sponsor's primary operations.

[28] This does not apply to subproject sponsors who are not substantially involved in these activities. Not substantially involved means that the activity concerned is ancillary to a subproject sponsor's primary operations.

[29] This does not apply to subproject sponsors who are not substantially involved in these activities. Not substantially involved means that the activity concerned is ancillary to a subproject sponsor's primary operations.

[30] This does not apply to the purchase of medical equipment, quality control (measurement) equipment, and any equipment for which the PIU considers the radioactive source to be trivial and adequately shielded.

[31] This does not apply to the purchase and use of bonded asbestos cement sheeting where the asbestos content is less than 20%.

Punjab Intermediate City Improvement Investment Project (PICIIP)

Environment Screening & Categorization Form (ESCF)

Instructions:

(i) The PIU staff shall complete this form to support the environmental categorization of a project and submit to the ADB for verification and approval.

(ii) This checklist focuses on environmental issues and concerns. To ensure that the Social dimensions are adequately considered, refer also to the Checklists on involuntary resettlement and Indigenous Peoples.

(iii) This form is to be completed assuming the "without mitigation" case. The purpose is to identify potential impacts.

1. Project Name: Construction of Covered Parking Shed for Solid Waste Machinery at Mubarak Pura, Capital Road Sialkot and Allama Iqbal Town Sialkot.

2. Project Scope of Work (list the major interventions): The project involves establishment of Parking shed on total area of 12.76 kanals at Mubarak Pura for 64 nos. of vehicles and at Allama Iqbal Town on 9.8 kanals for 16 nos. of vehicles. Mubarak Pura site include construction of steel prefabricated sheds, 6'-0" high boundary wall, open service station, work shop, office building and installation of CCTV cameras while at Allam Iqbal Town steel prefabricated sheds, 02 nos. of gates, a security guard room and installation of CCTV cameras will be made.

3. Project Location /Administrative Boundary: Site 1. Mubarak Pura, Capital Road, Sialkot
Site 2. Allama Iqbal Town, Sialkot

4. Total Project Cost (million PKR)[32]: Rs. 111,364,244/-

5. Project GPS Co-ordinates[33]/ Site 1. Mubarak Pura: 32.4960089 N, 74.5228376 E
Site 2. Allama Iqbal Town 32.4951155N, 74.5069898E

6. The proposed project activity is NOT listed in the Prohibited Investment Activities List (PIAL) (please refer to Annexure I below).

☑ **YES** ☐ **No**

Based on mapping of GPS Co-ordinates onto Google Earth (Annexure II), please respond to the following:

7. Is the project site(s) located adjacent to or within any environmentally sensitive areas (National Park, Protected Area, Buffer zone of Protected Area, Wetland, Mangrove?) If so, provide details and explain the potential risks to the sensitive areas from the proposed project activities:

S.No	Issues	Yes	NO
7.	Is the sub-project area adjacent to or within the cultural heritage site?		√
8.	Is the sub-project area adjacent to or within environmentally protected area?		√
9.	Is the sub-project area adjacent to or within Wetland?		√
10	Is the sub-project area adjacent to or within the Forest?		√
11	Is the sub-project area adjacent to or within Biodiversity hotspot?		√
12	Is the sub-project area adjacent to or within Buffer zone of protected area		√

[32] Required to assess categorization under Pak EPA guidelines

[33] In case of cluster of projects, please provide GPS Co-ordinates for each project location

8. Is project(s) located in a densely populated area(s)? ☑ **YES** ☐ **No**

9. If YES to the above, use the satellite imagery to identify the numbers and types (as far as possible) of sensitive receptors (SR) below:

		Site 1	Site 2
SR Type 1: School/Academy	**Approx. Number of SR1:**	01	01
SR Type 2: Mosque	**Approx. Number of SR2:**	01	01
SR Type 3: Hospital/Clinic	**Approx. Number of SR3:**	0	0
SR Type 4: Public Building/ Govt. Office	**Approx. Number of SR4:**	01	01
SR Type 5: Graveyard/Shrine	**Approx. Number of SR5:**	0	0

10. Will the proposed project activity require dislocation of people? If so, please mention the estimated number of people to be displaced.

NO

11. Will any land acquisition be required for the proposed project activity? If so, please provide details.

NO

12. Please provide details of any significant expected impacts ("without mitigation" case) due to the proposed project activities on the identified sensitive receptors:

S.No	Type of expected impact	Details on Severity of expected impacts
1	Generation of high dust levels in sensitive areas during construction.	High
2	High noise levels in sensitive areas due to blasting and civil works.	Medium
3	Occupational and community health and safety risks.	Minimal
4	Impact on water bodies due to disposal of chemicals/oils/lubricants and other hazardous/semi-hazardous substances.	No
5	Risks to community health and safety caused by (any or all of the below) (i) Management and disposal of waste and/or (ii) Civil or electrical works and/or (iii) Accidental and natural hazards, particularly where structural elements or components of project are accessible to members of affected community and/or (iv) Fire, electric shock or failure of civil structures during operation.	Medium
6	Generation of disease vectors due to project activities.	Minimal

7	Depletion and/or Contamination of ground water reservoirs due to leaching of chemicals, oil, lubricants and other hazardous/semi-hazardous substances.	No
8	Improper sanitation and solid waste disposal systems.	Minimal
9	Degradation of land and ecosystem (e.g. loss of wetlands and wild lands, coastal zones, watersheds and forests).	Medium
10	Road blocking and temporary flooding due to land excavation during rainy season.	Medium
11	Dislocation or involuntary resettlement of people.	No
12	Impacts on vulnerable groups such as the poor, women and children and indigenous peoples.	No
13	Degradation of cultural property and loss of cultural heritage and tourism reserves.	No
14	Impact on Flora and Fauna, particularly on any endangered species located in project area(s).	Medium
15	Social conflicts	Minimal

Project Category Recommendation

13. It is recommended that based on the available project information and subsequent analysis, the project should be placed in (please tick one):

☐ **Category 'A'** ☑ **Category 'B'** ☐ **Category 'C'**

14. Please provide an explanation to justify the Categorization above:
Severity of expected impacts as evident from above table are less adverse and few site specific impacts irreversible and as per ADB Safeguard Policy, a project is classified as category B if it is likely to have few site specific adverse environmental impacts.

Screening & Categorization Conducted by:

_____
Environment Officer, PIU

Endorsed by:

_____
Head of PIU

Approved by:

_____
ADB Environment Safeguards Focal Point

Endorsed by:

_____
Project Officer, ADB

ANNEXURE I –Prohibited Investment Activities List (PIAL)

The following do not qualify for ADB financing:

(xi) Production or activities involving harmful or exploitative forms of forced labor[34] or child labor;[35]
(xii) Production of or trade in any product or activity deemed illegal under host country laws or regulations or international conventions and agreements or subject to international phase outs or bans, such as (a) pharmaceuticals,[36] pesticides, and herbicides,[37] (b) ozone-depleting substances,[38] (c) polychlorinated biphenyls[39] and other hazardous chemicals,[40] (d) wildlife or wildlife products regulated under the Convention on International Trade in Endangered Species of Wild Fauna and Flora,[41] and (e) transboundary trade in waste or waste products;[42]
(xiii) Production of or trade in weapons and munitions, including paramilitary materials;
(xiv) Production of or trade in alcoholic beverages;[43]
(xv) Production of or trade in tobacco;[44]
(xvi) Gambling, casinos, and equivalent enterprises;[45]
(xvii) Production of or trade in radioactive materials,[46] including nuclear reactors and components thereof;
(xviii) Production of, trade in, or use of unbonded asbestos fibers;[47]
(xix) Commercial logging operations or the purchase of logging equipment for use in primary tropical moist forests or old-growth forests; and

(xx) Marine and coastal fishing practices, such as large-scale pelagic drift net fishing and fine mesh net fishing, harmful to vulnerable and protected species in large numbers and damaging to marine biodiversity and habitats.

[34] Forced labor means all work or services not voluntarily performed, that is, extracted from individuals under threat of force or penalty.

[35] Child labor means the employment of children whose age is below the host country's statutory minimum age of employment or employment of children in contravention of International Labor Organization Convention No. 138 "Minimum Age Convention" (www.ilo.org).

[36] A list of pharmaceutical products subject to phaseouts or bans is available at http://www.who.int.

[37] A list of pesticides and herbicides subject to phaseouts or bans is available at http://www.pic.int.

[38] A list of the chemical compounds that react with and deplete stratospheric ozone resulting in the widely publicized ozone holes is listed in the Montreal Protocol, together with target reduction and phaseout dates. Information is available at http://www.unep.org/ozone/montreal.shtml.

[39] A group of highly toxic chemicals, polychlorinated biphenyls are likely to be found in oil-filled electrical transformers, capacitors, and switchgear dating from 1950 to 1985.

[40] A list of hazardous chemicals is available at http://www.pic.int.

[41] A list is available at http://www.cites.org.

[42] As defined by the Basel Convention; see http://www.basel.int.

[43]This does not apply to subproject sponsors who are not substantially involved in these activities. Not substantially involved means that the activity concerned is ancillary to a subproject sponsor's primary operations.

[44]This does not apply to subproject sponsors who are not substantially involved in these activities. Not substantially involved means that the activity concerned is ancillary to a subproject sponsor's primary operations.

[45]This does not apply to subproject sponsors who are not substantially involved in these activities. Not substantially involved means that the activity concerned is ancillary to a subproject sponsor's primary operations.

[46] This does not apply to the purchase of medical equipment, quality control (measurement) equipment, and any equipment for which the PIU considers the radioactive source to be trivial and adequately shielded.

[47] This does not apply to the purchase and use of bonded asbestos cement sheeting where the asbestos content is less than 20%.

Annexure C

Occupational Health and Safety Plan

Occupational Health and Safety covers all personnel working under the project and will be in line with the World Bank EHS guidelines on health and safety.

The Occupational Health and Safety program will aim to ensure that the workplace is safe and healthy by: addressing the hazards and risks at the workplace; outlining the procedures and responsibilities for preventing, eliminating and minimizing the effects of those hazards and risks; identifying the emergency management plans for the workplace or workplaces; and, specifying how consultation, training and information are to be provided to employees at various workplaces.

Some of the risks/hazards associated with workplaces are due to working close to or at sites associated with the various project construction activities. Other risks associated with the project construction phase include risk of increase of vector borne and other different diseases.

The following sections will be implemented during the construction phase to address and ensure workers' health and safety.

a. Screening and regular unannounced checking of workers.

As per the procedure for hiring workers, all contractors and labor agencies are required to make all prospective workers undergo medical tests to screen for diseases and sicknesses, prior to selection and employment of any worker. The contractor is also responsible for ensuring that no worker who has a criminal record is employed at the project site. It will be ensured that all workers undergo medical tests to screen diseases at source and at sites in consultation with the designated Health Officer.

In addition to this, the Project Management will also undertake sudden, unannounced checks on workers to look for diseases such as HIV, STDs, and hepatitis and take necessary steps as mandated by the Contractual agreement between the Contractor and the Worker(s).

b. Minimizing hazards and risks at the workplace.

To ensure safety at all work sites, the following will be carried out:

i. Installation of signboards and symbols in risky and hazardous areas, to inform workers to be careful.

ii. Construction of barricades around construction sites and deep excavated pits, to cordon off and deter entry of unauthorized personnel and workers into these areas.

iii. Providing a safe storage site/area for large equipment such as power tools and chains, to prevent misuse and loss.

iv. Proper Housekeeping: Ensuring that materials are all stacked, racked, blocked, interlocked, or otherwise secured to prevent sliding, falling, or collapse. Brick stacks will not be more than 7 feet in height and for concrete blocks they will not be more than 6 feet high.

v. Removing all scrap timber, waste material and rubbish from the immediate work area as the work progresses.

vi. Where scaffolds are required, ensuring that each scaffold or its components shall be capable of supporting its own weight and at least 4 times the maximum intended load applied or transmitted to it. The platform/scaffold plank shall be at least 15 inches wide and 1.5 inches thick. The rope should be capable of supporting at least 6 times the maximum intended load applied or transmitted to that rope. Pole scaffolds over 60 feet in height shall be designed by a registered professional engineer and shall be constructed and loaded in accordance with that design. Where scaffolds are not provided, safety belts/safety nets shall be provided;

vii. Ensure that all ramps or walkways are at least 6 feet wide, having slip resistance threads and not inclined at more than a slope of 1 vertical and 3 horizontal.

viii. Stacking away all excavated earth at least 2 feet from the pit to avoid material such as loose rocks from falling back into the excavated area and injuring those working inside excavated sites.

ix. Constructing support systems, such as bracing to adjoining structures that may be endangered by excavation works nearby.

x. Only a trained electrician to construct, install and repair all electrical equipment to prevent risks of electrical shocks and electrocution.

xi. Install fire extinguishers and/or other fire-fighting equipment at every work site to prepare for any accidental fire hazards.

c. Provision of Personal Protective Equipment

Risks to the health and safety of workers can be prevented by provision of Personal Protective Equipment (PPEs) to all workers. This will be included in the construction cost for each Contractor. Depending on the nature of work and the risks involved, contractors must provide

without any cost to the workers, the following protective equipment:

i. High visibility clothing for all personnel during road works must be mandatory.

ii. Helmet shall be provided to all workers, or visitors visiting the site, for protection of the head against impact or penetration of falling or flying objects.

iii. Safety belt shall be provided to workers working at heights (more than 20 ft) such as roofing, painting, and plastering.

iv. Safety boots shall be provided to all workers for protection of feet from impact or penetration of falling objects on feet.

v. Ear protecting devices shall be provided to all workers and will be used during the occurrence of extensive noise.

vi. Eye and face protection equipment shall be provided to all welders to protect against sparks.

vii. Respiratory protection devices shall be provided to all workers during occurrence of fumes, dusts, or toxic gas/vapor.

viii. Safety nets shall be provided when workplaces are more than 25 feet (7.5 m) above the ground or other surfaces where the use of ladders, scaffolds, catch platforms, temporary floors or safety belts is impractical.

The specific PPE requirements for each type of work are summarized below.

Table C.1 PPE Requirement List

Type of Work	PPE
Elevated work	Safety helmet, safety belt (height greater than 20 ft), footwear for elevated work.
Handling work safety	Helmet, leather safety shoes, work gloves.
Welding and cutting work	Eye protectors, shield and helmet, protective gloves.
Grinding work	Dust respirator, earplugs, eye protectors.
Work involving handling of chemical substances	Dust respirator, gas mask, chemical-proof gloves. Chemical proof clothing, air-lined mask, eye protectors.

Wood working	Hard hat, eye protectors, hearing protection, safety footwear, leather gloves and dust respirator.
Blasting	Hard hat, eye and hearing protection.
Concrete and masonry work	Hard hat, eye protectors, hearing protection, safety footwear, leather gloves and dust respirator.
Excavation, heavy equipment, motor graders, and bulldozer operation	Hard hat, safety boots, gloves, hearing protection.
Quarries	Hard hat, eye protectors, hearing protection, safety footwear, leather gloves and dust respirator.

d. Procedures to Deal with Emergencies such as Accidents, Sudden Illness and Death of Workers

First aid kits will be made available at all times throughout the entire construction period by the respective contractors. This is very important, because most work sites will be at some distance from the nearest hospital. In addition to the first aid kits, the following measures should be in place:

i. Provision of dispensaries by the individual EPC contractor.

ii. A vehicle shall be on standby from the Project Office so that emergency transportation can be arranged to take severely injured/sick workers to the nearest hospital for immediate medical attention.

iii. A designated Health Officer/worker for the Project will be identified as a focal person to attend to all health and safety related issues. This employee's contact number will be posted at all work sites for speedy delivery of emergency services. The focal person shall be well versed with the medical system and facilities available at the hospital.

iv. Communication arrangements, such a provision of radios or mobile communication for all work sites, for efficient handling of emergencies, will be made.

e. Record Maintenance and Remedial action

The Project Management will maintain a record of all accidents and injuries that occur at the work site. This work will be delegated by the contractor to the site supervisor and regularly reviewed every quarter by project management. Reports prepared by the contractor shall include information on the place, date and time of the incident, name of persons involved,

cause of incident, witnesses present and their statements. Based on such reports, the management can jointly identify any unsafe conditions, acts or procedures and recommend for the contractor to undertake certain mitigative actions to change any unsafe or harmful conditions.

f. Compensation for Injuries and Death

Any casualty or injury resulting from occupational activities should be compensated as per the local labor laws of Kyrgyz Republic. Where compensation is sought by the injured party, proper procedures for documentation of the case will be followed, including a detailed report on the accident, written reports from witnesses, report of the examining doctor and his/her recommendation for treatment. Each individual contractor will be responsible for ensuring compensation for the respective workers.

g. Awareness Programs

The Project management will undertake awareness programs through posters, talks, and meetings with the contractors to undertake the following activities:

i. Dissemination sessions will clarify the rights and responsibilities of the workers regarding interactions with local people (including communicable disease risks, such as HIV/AIDS), work site health and safety, waste management (waste separation, recycling, and composting), and the illegality of poaching.

ii. Make workers aware of procedures to be followed in case of emergencies such as informing the focal health person who in turn will arrange the necessary emergency transportation or treatment.

h. Nomination of a Health and Safety Focal Person

Within each site (especially if different sites are being implemented by different contractors), a Health and Safety Focal Person will be appointed. The Terms of Reference for the focal person will mainly be as follows:

i. Function as the focal person/representative for all health and safety matters at the workplace;

ii. Responsible for maintaining records of all accidents and all health and safety issues at each site, the number of accidents and its cause, actions taken and remedial measures undertaken in case of safety issues;

iii. Be the link between the contractor and all workers and submit grievances of the workers to the contractor and instructions/directives on proper health care and safety from the contractors back to the workers;

iv. Ensure that all workers are adequately informed on the requirement to use Personal Protective Equipment and its correct use;

v. Also responsible for the first aid kit and making sure that the basic immediate medicines are readily available.

Annexure D

Emergency Response Plan

D.1 PURPOSE

The purpose of this Emergency Response Procedure is to provide measures and guidance for the establishment and implementation of emergency preparedness plans for the BNBR project. The aim of the Emergency Response Procedure is to:

(i) Ensure all personnel and visitors to the office/job sites are given the maximum protection from unforeseen events.

(ii) Ensure all personnel are aware of the importance of this procedure to protection of life and property.

D.2 EMERGENCY PREPARATION AND RESPONSE MEASURE SCOPE

The emergency management program is applied to all Project elements and intended for use throughout the Project life cycle. The following are some emergencies that may require coordinated response.

(i) Construction Accident

(ii) Road & Traffic Accident

(iii) Hazardous material spills

(iv) Structure collapse or failure

(v) Trauma or serious illness

(vi) Sabotage

(vii) Fire

(viii) Environmental Pollution

(ix) Loss of person

(x) Community Accident

D.3 RESPONSIBILITIES

The detailed roles and responsibilities of certain key members of the Emergency Response team available to assist in emergency are provided in **Table D.1** below.

Table D.1 Emergency Response Team

Action Group	Responsibility
Emergency Coordinator	▪ Overall control of personnel and resources. ▪ The Emergency Coordinator will support and advise the Site Safety Supervision as necessary. ▪ Serves as public relations spokes persons, or delegates to some staff member the responsibility for working with news media regarding any disaster or emergency. Also assure proper coordination of news release with appropriate corporate staff or other designated people.
Site Safety Supervision (Emergency Commander)	▪ Overall responsibility for activating emergency plan and for terminating emergency actions. ▪ Be alternative of emergency response chairpersons. ▪ Disseminates warnings and information as required to ensure all people in the immediate area have been warned and evacuated either by alarms or by word of mouth. ▪ Supervise the actions of the Emergency Response Team to ensure all persons are safe from the danger. ▪ Notify outside authorities if assistance is required. ▪ Carries the responsibility for coordinating actions including other organizations in accordance with the needs of the situation. ▪ Ensure maximum co-operation and assistance is provided to any outside groups called to respond to an emergency. ▪ Establish and appoint all emergency organization structure and team. ▪ Assures adequate delegation of responsibilities for all key positions of assistants on the Project to assist with any foreseeable emergency. ▪ Ensure resources available to purchase needed emergency response equipment and supplies. ▪ Assures that all persons on the Emergency Response Team aware and fully understand their individual responsibilities for implementing and supporting the emergency plan. ▪ Establish the emergency drill schedule of all identified emergency scenarios, track the status and evaluate the emergency. ▪ The Emergency Commander shall ensure that senior management personnel have been reported of the emergency as soon as practical after the event.
	▪ Ensure that the exit route is regularly tested and maintained in good working order.

Security Team	▪ Maintain station at the security gate or most suitable location to secure the area during any emergency such that only authorized personnel and equipment may enter, prevent access to the site of unauthorized personnel. ▪ Assist with strong/activation of services during an emergency. ▪ Ensure vehicles and obstructions are moved to give incoming emergency vehicles access to the scene, if ambulance or emergency services are attending the site, ensure clear access and personnel are located to direct any incoming emergency service to the site of emergency.
Rescue & Medical Team	▪ Protect the injured from further danger and weather. ▪ Provide treatment to the victim(s) to the best of their ability by first aid and then transfer to hospital. ▪ Remain familiar with the rescue activities and rescue apparatus. ▪ Assist outside medical services personnel when they arrive
General Administration Team	Response to support any requested general facilities for assisting Emergency Response Team in their work.
Government Relation Team	▪ Coordinate with local government on a matter of concerned in the emergency response plan to liaise with local officers in their affair for support Emergency Response Team. ▪ Coordinate emergency plan with the government authorities, local community.
Environment Team	In case of emergency related to the environmental pollution such as the chemical spill, oil spill into the ambient, the environment team will support the technical advice to control and mitigate the pollution until return to the normal situation.
Department Heads	▪ Call up of personnel into the safe location for protective life and property. ▪ Take immediate and appropriate action while Emergency Response Team is being mobilized. ▪ Keep in touch with the Emergency Commander ▪ Control and supervise operators and contractors on the implementation of this procedure, with consultation with Safety Team as necessary. ▪ Provide and maintain emergency equipment of their responsible areas.
Other Staff and Employees	▪ All other staff and employees will remain at their workstations or assembly point unless directed otherwise from Emergency Response Team. ▪ Each supervisor will ensure that all members of his work group are accounted for and keep in touch with each of their Department Head.

D.4 PROCEDURE

Emergency situation and injuries to person can occur at any time or place either on Project site or elsewhere. The most two common types of emergencies on site are fire and serious accident.

Figure D.1 Emergency Procedure for Fire

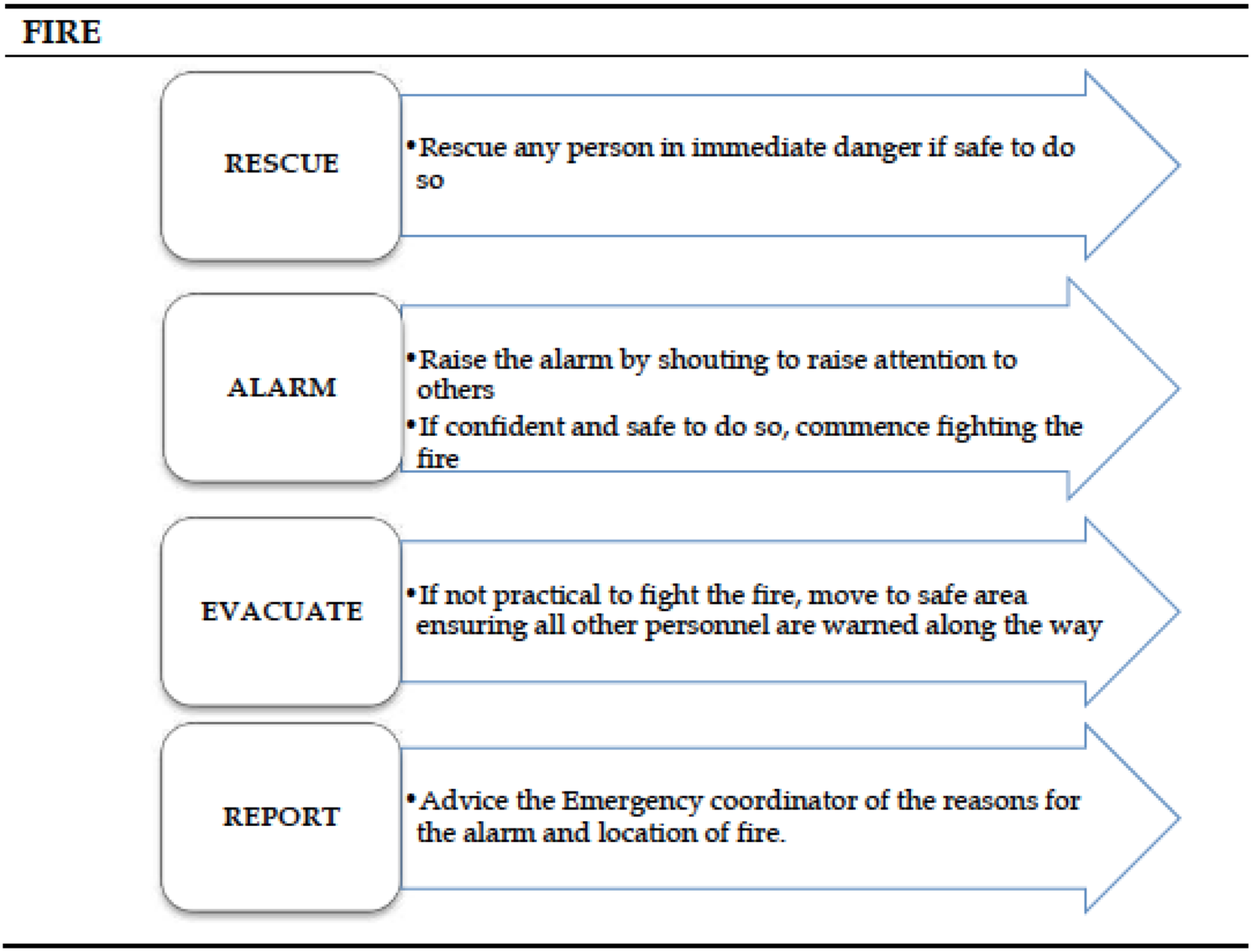

Figure D.2 Emergency Procedure for Serious Accident

ACCIDENT

In the event of injuries of persons, the first person on the scene should take the following action:

If a hazard exists consider your own safety then if possible remove the hazard or the injured person.

Assess the patient by checking for Airway, Breathing, Pulse and obvious

Report directly to First Aid or Security Centers, when raising the alarm you must clearly give the following in formation;

- Your name and the detail of accident
- The location of the injured person(s)
- The number of persons injured
- The extent of the injuries, if known
- What known hazards are in the area

Make the injured person as comfortable as possible

Treat the obvious injuries

Reassure the injured person

D.5 COMMUNICATION WITH AUTHORITIES / PRESS AT SITE

In the event of an accident or incident, only senior staff is permitted to give factual information to the authorities for resource of liability exposure. The press must be avoiding politely, at all costs, with the terse comment that “the matter is under investigation and relevant information when available will be provided by our Head Office” Do not ever give your opinion or story.

First Aid Persons

Upon advice of medical emergency, make immediate assessment to response required and if necessary, advise security to summon ambulance or medical assistance, the qualified first aid attendant should also,

- Provide treatment to the victim(s) to the best of his/her ability.
- Ensure the safety of victims by ceasing any work activity in the area.
- Protect the injured from further danger and weather.
- Assist medical services personnel when they arrive.

General Administration Team

Upon advice of medical emergency, maintain contact with first aid personnel and summon ambulance if required.

Security Team

- If ambulance or emergency services are attending the site, ensure clear access and personnel are located to direct vehicle closest to the scene.
- Prevent access to the site of unauthorized personnel (press, etc.).

Emergency Coordinator

- The Emergency Coordinator shall assist emergency personnel at the scene as required through allocation of company resources.
- The Emergency Coordinator shall ensure next-of-kin are properly notified as soon as possible and give whatever company support and assistance is necessary to assist them bundle the situation
- The Emergency Coordinator shall ensure that senior management personnel are advised of the emergency as soon as practical after the event.

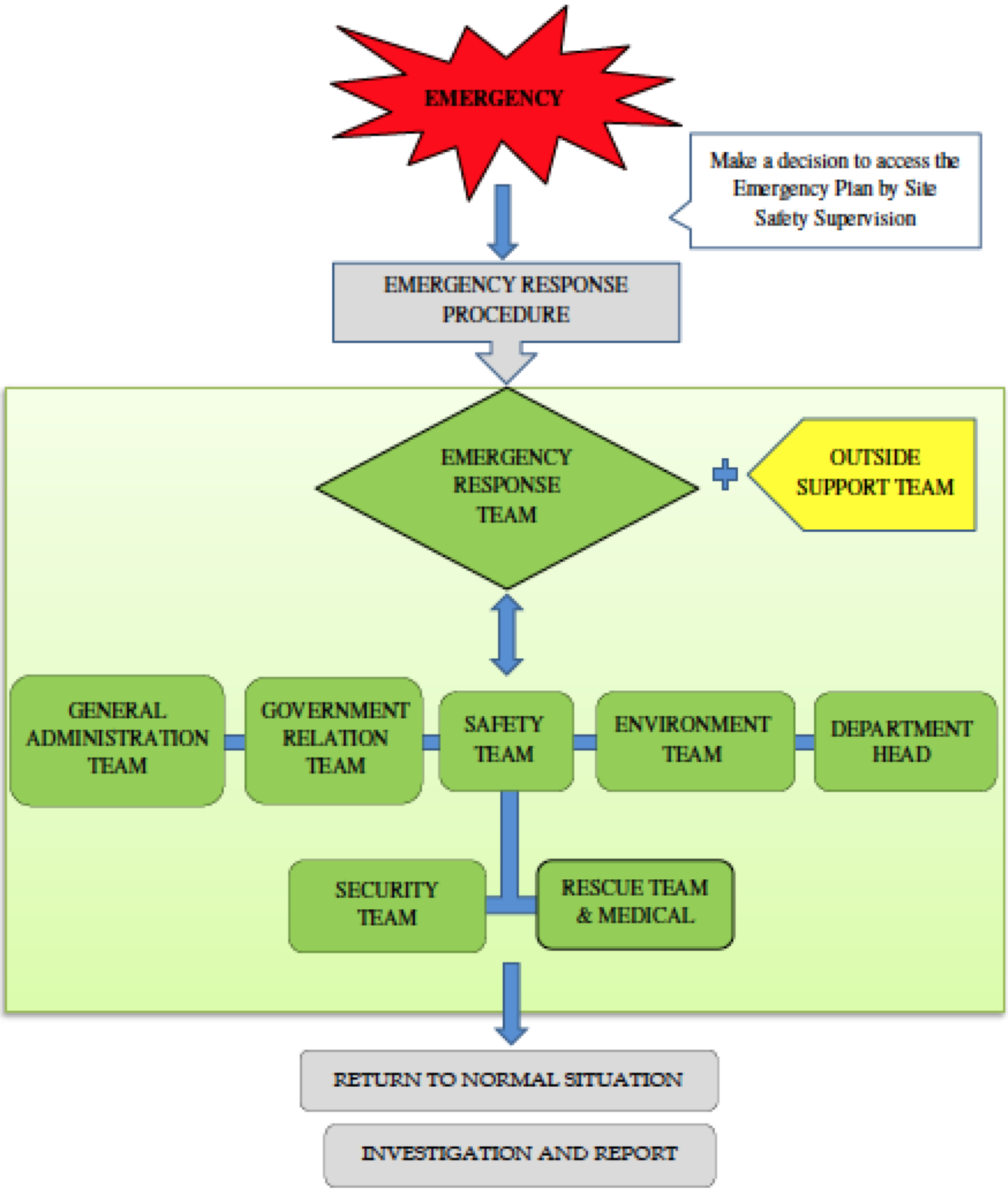

Note: Name of contact person and call number from Owner/Contractor to be determined.

Section A: Identification Data

Report No:	Date of Reported:	Reporter:	Sign:
Job Title:		Company Name:	

Section B: Violence Rate

Accident Violence: ☐ 01-Death ☐ 02-Serious Injury ☐ 03-Lost Time Injury ☐ 04-First Aid ☐ 05- Not Injury ☐ 06-Near Miss

Property Damage Cost: ☐ 1-2,000 USD ☐ 2,001-10,000 USD ☐ 10,001-50,000 ☐ > 50,001

Section C: Environmental Impact

Affected area	☐ Construction area	☐ Public area	
Receptor	☐ None	☐ Workers	☐ Community
Type of pollution	☐ Physical	☐ Chemical	☐ Biological
Toxicity	☐ Non-toxic	☐ Low - toxic	☐ High - toxic
Return to Normal	☐ 1 day	☐ 1 day to 1 week	☐ ≥ 1 week
Cumulative impact	☐ Non-cumulative	☐ Cumulative	

Section D: Injured/Illness Employee

1.Name:	Sex: ☐ Male ☐ Female	Date of Birth: Month / Day / Year	Age:	Regular Job Title:	Experience: In this job title Years Weeks / In this Project Years Weeks
Site:	Company:	Reference:	Phone No:	Social Security Number	

Part of Body Injured or Affected:

☐ Head	☐ Hands	☐ Face	☐ Nose
☐ Eyes	☐ Legs	☐ Teeth	☐ Neck
☐ Trunk	☐ Toes	☐ Elbow	☐ Shoulder
☐ Back	☐ Ankle	☐ Wrist	☐ Foot
☐ Arms	☐ Thump	☐ Fingers	☐ Internal

Remark: .....

Nature of Injury or Illness:

☐ Laceration	☐ Amputation	☐ Puncture	☐ Fracture
☐ Strain & Sprain	☐ Burns	☐ Contusion	☐ Dry Heat Friction
☐ Hernia	☐ Foreign Body	☐ Chemical	☐ Contamination
☐ Skin (Occupationnel)	☐ Rash	☐ Irritation	

Remark: .....

2.Name:	Sex: ☐ Male ☐ Female	Date of Birth: Month / Day / Year	Age:	Regular Job Title:	Experience: In this job title Years Weeks / In this Project Years Weeks
Site:	Company:	Reference:	Phone No:	Social Security Number	

Part of Body Injured or Affected:

☐ Head	☐ Hands	☐ Face	☐ Nose
☐ Eyes	☐ Legs	☐ Teeth	☐ Neck
☐ Trunk	☐ Toes	☐ Elbow	☐ Shoulder
☐ Back	☐ Ankle	☐ Wrist	☐ Foot
☐ Arms	☐ Thump	☐ Fingers	☐ Internal

Remark: .....

Nature of Injury or Illness:

☐ Laceration	☐ Amputation	☐ Puncture	☐ Fracture
☐ Strain & Sprain	☐ Burns	☐ Contusion	☐ Dry Heat Friction
☐ Hernia	☐ Foreign Body	☐ Contamination	☐ Chemical
☐ Skin (Occupationnel)	☐ Rash	☐ Irritation	

Remark: .....

Section E: Accidents/incident Details

Date Accident/Incident Occurred:	Time Accident/Incident Occurred:	Exact Location of the Accident / Incident:

Details of the actual Job Being done at the time:

Details of Accident / Incident / What actually happened?

Section F: Accident Cause (Basic cause mark X / Contributing cause, if any mark O)

UNSAFE CONDITIONS		UNSAFE ACTS	
1	☐ Inadequately Guarded	1	☐ Operating Without Authority / Training
2	☐ Unguarded	2	☐ Operating at Unsafe Speed
3	☐ Defective Tools, Equipment, or Substance	3	☐ Marking SHE Device Inoperative
4	☐ Unsafe Design or Construction	4	☐ Using Unsafe Equipment or Equipment Unsafely
5	☐ Hazardous Arrangement	5	☐ Unsafe Loading, Placing, Mixing
6	☐ Unsafe Illumination	6	☐ Taking Unsafe Position
7	☐ Unsafe Ventilation	7	☐ Working on Moving or Dangerous Equipment
8	☐ Unsafe Clothing	8	☐ Distraction, Teasing, Horse Play
9	☐ Insufficient Instruction	9	☐ Failure to use Personal Protective Devices
10	☐ Lack of system of work	10	☐ Lack of effective instruction or supervision

Why was the unsafe act committed? _____ Why did the unsafe condition exist? _____

Section G: Guide to Corrective Action (Base on the cause checked above, I am taking the following corrective action)

UNSAFE ACT	UNSAFE CONDITION	If Supervisor can't handle, then recommend to
☐ Stop the Behaviour	☐ Remove	☐ Site Engineer, or
☐ Study the job	☐ Guard	☐ Site Manager, or
☐ Instruct (tell-show-try-check)	☐ Warn	☐ Project Manager, or
☐ Follow Up	☐ Supervisory Training	☐ Safety Committee
☐ Enforce		

Detail below any immediate remedial actions that have been taken:

Detail below any corrective and preventative actions that could be taken to prevent future re-occurrence:	Responsible	Completion Date

Section H: Witness Statement	
Witness Name	**Interviewer Name**

Section I: Reviewed & Recommend by			
Recommendation:			
Reviewed By:	Position:	Signature:	Date:

Remarks : If Accident or Incident happened with lost time injury and affected to the publicity must further report to Safety Department;

: First Aid Cases will not applicable to this form;

: The accident report shall submit to Safety Department within 3 days

: Attached the photograph or sketch the location of accident / incident;

Annexure E

Archaeological ‘Chance Find’ procedure

Background

The purpose of this document is to address the possibility of archaeological deposits becoming exposed during ground altering activities within the project area and to provide protocols to follow in the case of a chance archaeological find to ensure that archaeological sites are documented and protected as required.

Archaeological sites are an important resource that is protected for their historical, cultural, scientific and educational value to the general public and local communities. Impacts to archaeological sites must be avoided or managed by development proponents. The objectives of this 'Archaeological Chance Find Procedure' are to promote preservation of archaeological data while minimizing disruption of construction scheduling It is recommended that due to the moderate to high archaeological potential of some areas within the project area, all on site personnel and contractors be informed of the Archaeological Chance Find Procedure and have access to a copy while on site.

Potential Impacts to Archaeological Sites

Developments that involve excavation, movement, or disturbance of soils have the potential to impact archaeological materials, if present. Activities such as road construction, land clearing, and excavation are all examples of activities that may adversely affect archaeological deposits.

Archaeological 'Chance Find' Procedure

If you believe that you may have encountered any archaeological materials, stop work in the area and follow the procedure below:

The following 'chance-find' principles will be implemented by the contractor throughout the construction works to account for any undiscovered items identified during construction works:

(i) Workers will be trained in the location of heritage zones within the construction area and in the identification of potential items of heritage significance.

(ii) Should any potential items be located, the site supervisor will be immediately contacted and work will be temporarily stopped in that area.

(iii) If the site supervisor determines that the item is of potential significance, an officer from the department of Archaeology (DoA) will be invited to inspect the site and work will be stopped until DoA has responded to this invitation.

(iv) Work will not re-commence in this location until agreement has been reached between DoA and IPIG as to any required mitigation measures, which may include excavation and recovery of the item.

(v) A precautionary approach will be adopted in the application of these procedures.

Detailed Procedural Steps

- If the Director, department of Archaeology receives any information or otherwise has the knowledge of the discovery or existence of an antiquity of which there is no owner, he shall, after satisfying himself as to the correctness of the information or knowledge, take such steps with the approval of the Government, as he may consider necessary for the custody, preservation and protection of the antiquity.
- Whoever discovers, or finds accidentally, any movable antiquity shall inform forth with the Directorate within seven days of its being discovered or found.
- If, within seven days of his being informed, the Director decides to take over the antiquity for purposes of custody, preservation and protection, the person discovering or finding it shall hand it over to the Director or a person authorized by him in writing.
- Where the Director decides to take over an antiquity, he may pay to the person by whom it is handed over to him such cash reward as may be decided in consultation with the Advisory Committee.
- The Director or any officer authorized by him with police assistance may, after giving reasonable notice, enter into, inspect and examine any premises, place or area which or the sub-soil of which he may have reason to believe to be, or to contain an antiquity and may cause any site, building, object or any antiquity or the remains of any antiquity in such premises, place or area to be photographed, copied or reproduced by any process suitable for the purpose.
- The owner or occupier of the premises, place or area shall afford all reasonable opportunity and assistance to the Director.
- No photograph, copy of reproduction taken or made shall be sold or offered for sale except by or with the consent of the owner of the object of which the photograph, copy or the reproduction has been taken or made.
- Where substantial damage is caused to any property as a result of the inspection, the Director shall pay to the owner thereof reasonable compensation for the damage in consultation with the Advisory Committee.
- If the Director after conducting an inquiry, has reasonable grounds to believe that any land contains any antiquity, he may approach the Government to direct the Revenue Department

to acquire such land or any part thereof and the Revenue Department shall thereupon acquire such land or part as for a public purpose.

Annexure F

Dust Management Plan

The purpose of this plan is to describe the measures that the project shall take to ensure that the risk of emissions from dust generated by site operations during construction are minimized and that best practice measures are implemented.

Dust emissions from construction can cause ill health effects to Contractor staff along with nuisance and annoyance to members of the local community. Dust will be controlled through:

- Elimination
- Reduction/Minimisation
- Control

This dust management plan shall be implemented based on the measures already provided in the Environmental Management Plan (EMP) relating to controlling dust emissions.

Methodology

The following methodology will be undertaken for each project section:

Step 1 – Identify the dust generating activities

Construction activities that are likely to produce dust will be identified. The activities that will be taken into account are:

Haulage Routes, Vehicles and Asphalt/Concrete Batching Plant

- Roads, surfaces and public highways
- Static and mobile combustion plant emissions
- Tarmac laying, bitumen surfacing and coating

Materials Handling, Storage, Spillage and Disposal

- Storage of material
- Stockpiles
- Spillages
- Storage of Waste

Site Preparation and Restoration after Completion

- Earthworks, excavation and digging
- Storage of spoil and topsoil

Demolition

Construction and Fabrication Processes

Step 2 – Identify Sensitive Receptors

Sensitive receptors have already been identified. The nature and location of the sensitive receptors will be taken into account when implementing control measures.

Step 3 – Implement Best Practice Measures to Control

Based on the nature of the activity producing the dust, the likelihood of dust being produced and the possible consequence of dust based on the sensitive receptors, the most effective control measure will be identified and implemented.

Step 4 – Monitor effectiveness of control

Construction Supervision Staff (CSC) will have the responsibility to ensure that dust control measures are being implemented and are effective.

Step 5 – Record and report result of monitoring

All inspections, audits and results of monitoring will be recorded and kept as part of the site filing system.

Method Statements and Risk Assessments

The Contractor's Risk Assessments and Method Statements will be required to be approved by the CSC prior to commencing work and will be required to contain environmental aspects of the task, including dust control measures where required.

Where dust has been identified within the risk assessment as a significant issue, the method statement will be required to cover the following:

- Methods and materials that will be used to ensure that dust generation is minimized.
- The use of pre-fabricated materials where possible.
- Optimum site layout:
  - Dust generating activities to be conducted away from sensitive receptors
  - Supply of water for damping down.
- Good housekeeping and management

All employees will be briefed on the Risk Assessment and Method Statement before starting work.

Training

All Contractor staff will be required to attend training seminars as already mentioned in the EMP document. A site-specific induction will also be required before being allowed to work on site. These will include site-specific sensitive receptors and details regarding dust control measures to be taken. Toolbox talks on air pollution and minimizing dust emissions will be provided on a regular basis to Contractor staff.

Identification of Dust Generating Sources and Control Methods

Haulage Routes, Vehicles and Asphalt/Concrete Batching Plant	
Dust Source	**Dust Control Methods**
Major haul roads and traffic routes	Haul roads will be dampened down via a mobile bowser, as required.
Public Roads	Road sweeper will be used to clean public roads as required.
Site traffic management	▪ Site traffic will be restricted to constructed access roads as far as possible. ▪ Site speed limit will be set at 10 mph as this will minimize the production of dust.
Road Cleaning	A mechanical road sweeper will be readily available and used.
Handling, Storage, Stockpiling and Spillage of Dusty materials	
Material handling operations	The number of times a material will have to be handled will be kept to a minimum to prevent double handling and ensure dusty materials are not handled unnecessarily.
Transport of fine dusty materials and aggregates.	Closed tankers will be used or sheeted vehicles.
Vehicle loading/unloading materials on to vehicles and conveyors.	▪ Dusty materials will be dampened down ▪ Drop heights will be kept to a minimum and enclosed where possible.
Storage of Materials	
Bulk cement, bentonite etc.	This will be delivered in tankers and stored in dedicated enclosed areas.
Fine dry materials	These will be protected from the weather and by storing in appropriate containers and indoors, where necessary.
Storage location	Material will be stored in dedicated lay-down areas.
Storage of Stockpiles	
Stockpile location	Stockpiles will be placed so as to minimize double handling and facilitate the site restoration.

Building stockpiles	Stockpiles, tips and mounds will not be stored at an angle greater than an angle of repose of the material.
Small and temporary stockpiles	▪ Where possible, stockpiles will be placed under sheeting. ▪ Dusty material will be damped down. ▪ Wind barriers (protective fences) of a similar height to the stockpile will be erected, if required.
Large and long term stockpiles	▪ Long-term stockpiles will be vegetated and stabilized as soon as possible. ▪ Stock plies will be dampened down until stabilized, where necessary. ▪ Wind barriers (protective fences) of a similar height to the stockpile will be erected, if required.
Waste Material from Construction	
Disposal method	A dedicated lay-down area will be available for waste. Waste will not be allowed to build up and will be disposed off at the designated locations as per EMP.
Site Preparation and Restoration	
Earthworks, excavation and digging	These activity areas will be kept damp where required and if possible, will be avoided during dry and windy periods.
Completed earthworks	Surfaces will be stabilized by re-vegetation as soon as possible, where applicable.
Construction and Fabrication Process	
Crushing of material for reuse, transportation and disposal	▪ Authorization will be obtained from IPIG and ADB before using any mobile plant on site for activities such as crushing and screening. ▪ Any crushing or screening activities will be located away from sensitive receptors.
Cutting, grinding, drilling, sawing, trimming, planning, sanding	▪ These activities will be avoided wherever possible. ▪ Equipment and techniques that minimize dust will be implemented. ▪ Water will be used to minimize dust.
Cutting roadways, pavements, blocks	Water sprinkling to be used.
Angle grinders and disk cutters	Best practice measures will be used such as dust extraction.

Monitoring Arrangements

Monitoring will be conducted at sensitive receptor locations in the project area as provided in the EMP. Furthermore, at locations where PM levels are exceeding applicable guidelines, additional stringent measures will be implemented at the respective location(s) in the project area to ensure dust levels are controlled as far as possible.

ANNEXURE G

Site Specific EMP (SSEMP) Guide & Template for Guidance to Contractor

Guide for Development of SSEMP

Step 1: Define Boundaries

Step 2: Identify Sensitive Receptors

Step 3: Specify construction activities

Step 4: Conduct Risk Assessment

Step 5: Assign Environment Management measures

Step 6: Prepare Site Plans

Step 7: Prepare Environment Work Plans (if required)

Step 8: Monitoring

Step 1: The project area needs to be clearly defined.

Step 2: The mapping of sensitive receptors has already been conducted and needs to be presented clearly in a map.

Step 3: The tentative construction activities to be conducted are as follows:

- **Site Surveying and Vegetation (Trees and plants) Clearance**
- **Establishment of Work Camp, Batching and Asphalt plant and access roads**
- **Dismantling of Asphalt and existing structures including Utilities**
- **Preparation of ground for Asphalting**
- **Asphalting**
- **Landscaping**

Step 4: The Risk Assessment matrix template is provided in the table below.

Risk is assessed as the likelihood that the activity will have an effect on the environment as well as the consequence of the effect occurring. It is often described like this:

Risk = Likelihood × Consequence

Likelihood Scale

Likelihood	Definition	Scale
Certain	Will certainly occur during the activity at a frequency greater than every week if preventative measures are not applied	5
Likely	Will occur more than once or twice during the activity but less than weekly if preventative measures are not applied	3
Unlikely	May occur once or twice during the activity if preventative measures are not applied	2
Rare	Unlikely to occur during the project	1

Consequence Scale

Consequence	Definition	Score
Catastrophic	The action will cause unprecedented damage or impacts on the environment or surrounding communities e.g. extreme loss of soil and water resources and quality from stormwater runoff extreme pollution of soil and water resources including major contamination from hazardous materials widespread effects on ecosystems with deaths of fauna/flora widespread community impacts resulting in illness, injury or inconvenience loss or destruction of archaeological or historical sites Occurrence will almost certainly result in the work being halted and a significant fine.	5

Major	The action will cause major adverse damage on the environment or surrounding communities e.g. major loss of soil and water resources and quality from stormwater runoff major pollution of soil and water resources including contamination from hazardous materials significant effects on ecosystems with isolated deaths of non-vulnerable flora and fauna significant annoyance or nuisance to communities major damage to or movement required to archaeological or historical sites Occurrence may result in work being halted and a fine	3
Moderate	No or minimal adverse environmental or social impacts e.g. no measurable or noticeable changes in stormwater quality. Water quality remains within tolerable limits little noticeable effect on ecosystems no or isolated community complaints no or unlikely damage to archaeological or historical sites no likelihood of being fined	2
Minor	No or minimal adverse environmental or social impacts e.g. no measurable or noticeable changes in stormwater quality. Water quality remains within tolerable limits little noticeable effect on ecosystems no or isolated community complaints no or unlikely damage to archaeological or historical sites no likelihood of being fined	1

Risk Score Table

		Consequence			
		Catastrophic	Major	Moderate	Minor
Likelihood	Certain	**25**	**15**	**10**	5
	Likely	**15**	**9**	6	3
	Unlikely	**10**	**6**	4	2
	Rare	5	3	2	1

Risk: **Significant: 15-25**
Medium: 6-10
Low 1-5

Any Medium to Significant risk requires an environmental management measure to manage the potential environmental risk. Judgement will be required concerning the application of an environmental management measure to mitigate low risk situations.

The higher the risk the more intensive the required mitigation measure will need to be; e.g. where site sedimentation is deemed to be low risk, then silt fences may be needed but as the risk increases, then sediment traps may be required. The selection of the appropriate mitigation measure will require judgement based on the level of risk and the specific site parameters.

Step 5: The Environmental Management measures are to be extracted from the IEE study for this project and should be added in the last column of the table below.

No.	Construction Activity	Hazards to Consider	Likelihood that the site or sensitive receptors will be affected?	Consequence of the site or sensitive receptors being affected?	Risk Score (consequence x likelihood)	Environmental Management Measures
i	**Site Surveying & vegetation clearance**	Damage to vegetation beyond project footprint				These can be taken from the EMP provided in the IEE report (If Risk Score is 6 or more)
		Erosion of exposed areas and sediment				
		Loss of topsoil				
		Dust generation				
		Noise				
ii	**Establishment of Work Camp, Batching plant etc.**	Soil deposited onto roads from tires				
		Stockpile erosion				
		Noise & Vibration				
		Traffic congestion				

		Fuel spills				
iii	**Dismantling of Asphalt and existing structures including Utilities**	Noise and vibration				
		Dust generation				
		Community safety				
		Worker safety				
		Traffic Congestion				
iv	**Preparation of Sub-Base**	Noise and vibration				
		Dust generation				
		Traffic Congestion				
v	**Asphalting**	Noise and vibration				
		Dust generation				
		Traffic Congestion				
		Community safety				

		Labor safety (PPEs)				
vi	**Landscaping**	Dust generation				
		Sediment runoff				
		Failure of vegetation to take root				

Step 6: The Site plans are a critical part of the SSEMP and will need to be prepared, otherwise the ADB will consider the document as incomplete.

The site plan will need to provide the following:

- **Indication of North and scale**
- **Existing and planned supporting infrastructure (e.g. access roads, water supplies and electricity supplies)**
- **Location of planned work**
- **Contours**
- **Drainage systems**
- **Locations of sensitive receptors**

Step 7 (if required)[48]: The completed SSEMP provides details of all the environmental management requirements for all stages of the construction process. For individual work teams who are responsible for only a small part of the overall construction works it can be confusing as to what is required for their particular work component. For example, the work team responsible for stripping soil for the construction areas are not going to be interested in the requirements for pouring concrete for footings and foundations. However, it is essential that the soil stripping team knows exactly what to clear and what to leave and where to put stockpiles of soil for later use.

In situations where different work activities are required at different times or at different locations, environmental work plans can be prepared. These are similar to the work method statements that are often produced for major construction projects.

Step 8: A detailed monitoring plan will be provided along with frequency and responsibilities to ensure all key environmental parameters are monitored to ensure compliance with both national and ADB requirements.

[48] ADB, Safeguards Unit for Central & West Asia Department, *Environmental Management for Construction Handbook.*

Template for SSEMP

1. **Introduction**
   - 1.1 Project Overview
   - 1.2 Scope of SSEMP
   - 1.3 Objectives of SSEMP
2. **Map of Sensitive Receptors**
3. **Construction Activities**
   - 3.1 Activities
4. **Risk Assessment**
   - 4.1 Risk Assessment Matrix & Mitigation Measures
5. **Site Plan(s)**
6. **Environmental Monitoring Plan**
   - 6.1 Instrumental Monitoring of Environmental Parameters by Contractor as per EMP
   - 6.2 In-house monitoring
   - 6.3 Third Party environmental monitoring
   - 6.4 Visual monitoring of Environmental Parameters by Contractor as per EMP
7. **Responsibilities**
   - 7.1 Organizational Responsibilities and Communication
   - 7.2 Responsibility of EA
   - 7.3 Responsibility of Construction Supervision Consultant (CSC)
   - 7.4 Responsibility of Contractor
   - 7.5 Responsibility of EPA

ANNEXURE H

Baseline Environmental Monitoring

Air Quality

Water, Environment Laboratories & Consultancy Services (WELCOS)

EPA CERTIFIED

Ambient Air Quality Test Report

Reference No.WELCOS/2021/AA/043/1 Date: 31 January, 2021

Name of Industry/ Client: PICIIP, Local Government & CD Department

Address: Sialkot

Nature of Monitoring: Ambient Air

Point Parking Shed Capitol Road, Sialkot

Analysis Date: 22 January, 2021

Analysis Completion Date 23 January, 2021

Analysis Parameters

Sr. No.	Parameters	PEQS Limits		Concentration	Remarks
		Time-weighted Average	Concentration in Ambient Air (24 Hour)		
1.	Sulphur Dioxide (SO2)	24 hours	120 µg/ m³	11.76	Complies
2.	Oxides Of Nitrogen as (NO)	24 hours	40 µg/ m³	6.78	Complies
3.	Oxides Of Nitrogen as (NO_2)	24 hours	80 µg/ m³	15.55	Complies
4.	Oxides Of Nitrogen as (NOX)	24 hours	120 µg/ m³	22.33	Complies
5.	Ozone (O_3)	24 hours	130 µg/ m³	16	Complies
6.	Respirable Particulate Matter PM_{10}	24 hours	150 µg/ m³	76	Complies
7.	Respirable Particulate Matter $PM_{2.5}$	24 hours	35 µg/m³	22	Complies
8.	Carbon Monoxide (CO)	24 hours	5 mg/m³	0.28	Complies

Terms and Conditions:

- Report cannot be used regarding compliance of any complaint, EPO or any other court case.
- This report should be reproduced as a whole and not in parts.
- This responsibility of the ethical use of the results reported in this report lies with the client.

Prepared By Reviewed By Approved By

----------Report End----------

WATER, ENVIRONMENT LABORATORIES & CONSULTANCY SERVICES (WELCOS) SERVICES WITH QUALITY

No. 20227

29 D, Punjab University Town-II, Khayban-e-Jinnah, Lahore-Pakistan

info@welcos.com.pk www.welcos.com.pk 0300-7222180

EPA CERTIFIED

ISO 9001:2015
ISO 14001:2015
OSHAS 18001:2015

Water, Environment Laboratories & Consultancy Services (WELCOS)

EPA CERTIFIED

Date: 22 January, 2021

Name Of Client	PICIIP, Local Government & CD Department
Reference no:	WELCOS/2021/AA/043/1
Coordinates	32.4960012,745229392
Location	Parking Shed Capitol Road, Sialkot

Sr No	Time	CO (mg/m³)	SO_2 (ug/m³)	NO (ug/m³)	NO_2 (ug/m³)	NO_X (ug/m³)	Ozone (ug/m³)
1.	13:00	0.22	5.7	5.1	10.5	15.6	12
2.	14:00	0.25	11	6.2	12.4	18.6	11
3.	15:00	0.23	10.4	5.7	12.2	17.9	14
4.	16:00	0.28	15.7	5.9	12.3	18.2	13
5.	17:00	0.31	15.4	5.8	15.1	20.9	11
6.	18:00	0.32	7.9	6.7	23.4	30.1	11
7.	19:00	0.31	9.6	6	12.1	18.1	10
8.	20:00	0.31	14.1	7.6	22.3	29.9	11
9.	21:00	0.31	17.5	6.9	10.2	17.1	11
10.	22:00	0.32	16.4	9.8	11.1	20.9	11
11.	23:00	0.29	15	9.7	13.3	23	11
12.	00:00	0.31	13.7	8.6	22.1	30.7	12
13.	01:00	0.32	8.7	6.3	14.9	21.2	11
14.	02:00	0.36	15.2	5.2	15.8	21.0	10
15.	03:00	0.35	13.5	5.2	15.1	20.3	12
16.	04:00	0.37	15.4	7.9	14.9	22.8	11
17.	05:00	0.36	4.3	4.7	24.2	28.9	12
18.	06:00	0.41	9.3	6	14.4	20.4	14
19.	07:00	0.42	6.5	5.8	17	22.8	14
20.	08:00	0.35	7.2	6.3	18.3	24.6	12
21.	09:00	0.31	13.6	9.9	11	20.9	11
22.	10:00	0.32	13.8	8.2	12.5	20.7	12
23.	11:00	0.31	10.3	7.4	25.8	33.2	12
24.	12:00	0.34	12.1	5.7	12.4	18.1	14
Average:		0.32	11.76	6.78	15.55	22.33	11

Signature:

No. 20231

29 D, Punjab University Town-II, Khayban-e-Jinnah, Lahore-Pakistan
info@welcos.com.pk www.welcos.com.pk 0300-7222180

EPA CERTIFIED

ISO 9001:2015
ISO 14001:2015
OSHAS 18001:2015

Water, Environment Laboratories & Consultancy Services (WELCOS)

EPA CERTIFIED

Ambient Air Quality Test Report

Reference No.WELCOS/2021/AA/043/2 Date: 31 January, 2021

Name of Industry/ Client: PICIIP, Local Government & CD Department

Address: Sialkot

Nature of Monitoring: Ambient Air

Point Parking Shed Allama Iqbal Town, Sialkot

Analysis Date: 23 January, 2021

Analysis Completion Date 24 January, 2021

Analysis Parameters

Sr. No.	Parameters	PEQS Limits		Concentration	Remarks
		Time-weighted Average	Concentration in Ambient Air (24 Hour)		
1.	Sulphur Dioxide (SO2)	24 hours	120 µg/ m^3	11.84	Complies
2.	Oxides Of Nitrogen as (NO)	24 hours	40 µg/ m^3	13.26	Complies
3.	Oxides Of Nitrogen as (NO_2)	24 hours	80 µg/ m^3	15.52	Complies
4.	Oxides Of Nitrogen as (NOX)	24 hours	120 µg/ m^3	28.78	Complies
5.	Ozone (O_3)	24 hours	130 µg/ m^3	11	Complies
6.	Respirable Particulate Matter PM_{10}	24 hours	150 µg/ m^3	82	Complies
7.	Respirable Particulate Matter $PM_{2.5}$	24 hours	35 µg/m^3	21	Complies
8.	Carbon Monoxide (CO)	24 hours	5 mg/m^3	0.27	Complies

Terms and Conditions:

- Report cannot be used regarding compliance of any complaint, EPO or any other court case.
- This report should be reproduced as a whole and not in parts.
- This responsibility of the ethical use of the results reported in this report lies with the client.

Prepared By Reviewed By Approved By

----------Report End----------

No. 20228

29 D, Punjab University Town-II, Khayban-e-Jinnah, Lahore-Pakistan

info@welcos.com.pk www.welcos.com.pk 0300-7222180

EPA CERTIFIED

ISO 9001:2015
ISO 14001:2015
OSHAS 18001:2015

Water, Environment Laboratories & Consultancy Services (WELCOS)

EPA CERTIFIED

Date: 23 January, 2021

Name Of Client	PICIIP, Local Government & CD Department
Reference no:	WELCOS/2021/AA/043/2
Coordinates	32.495696,74.5067477
Location	Parking Shed Allama Iqbal Town, Sialkot

Sr No	Time	CO (mg/m^3)	SO_2 (ug/m^3)	NO (ug/m^3)	NO_2 (ug/m^3)	NO_X (ug/m^3)	Ozone (ug/m^3)
1.	15:00	0.35	16	13.7	11.5	25.2	16
2.	16:00	0.32	15.4	13.5	13.2	26.7	15
3.	17:00	0.33	14.5	14.8	13.3	18.1	16
4.	18:00	0.31	13.4	13.9	11.2	15.1	16
5.	19:00	0.34	13.9	15.2	12.7	27.9	15
6.	20:00	0.29	13.5	14.9	17.6	32.5	16
7.	21:00	0.32	13.6	14.4	15.4	29.8	16
8.	22:00	0.30	12.4	13.4	21.1	34.5	16
9.	23:00	0.31	12.8	12.2	11.3	23.5	16
10.	00:00	0.32	12.4	13.8	12.4	26.2	16
11.	01:00	0.32	12.8	12.6	14.6	27.2	16
12.	02:00	0.32	13.3	12.4	20.4	32.8	16
13.	03:00	0.34	13.8	12.1	16.6	28.7	16
14.	04:00	0.30	11.9	11.8	15.1	26.9	16
15.	05:00	0.33	11.2	12.5	16.8	29.3	16
16.	06:00	0.30	9.9	12.9	15.9	28.8	16
17.	07:00	0.31	9.4	13.4	23.2	36.6	16
18.	08:00	0.33	8.6	13.2	15.4	28.6	16
19.	09:00	0.29	8.3	12.9	17.2	30.1	16
20.	10:00	0.28	7.8	12.8	18.1	30.9	16
21.	11:00	0.29	8.9	13.6	11.6	25.2	16
22.	12:00	0.34	9.6	13.8	12.7	26.5	16
23.	13:00	0.28	9.9	12.9	21.4	34.3	16
24.	14:00	0.32	10.9	11.6	13.9	25.5	16
Average:		**0.31**	**11.84**	**13.26**	**15.52**	**28.78**	**16**

Signature:

No. 20230

29 D, Punjab University Town-II, Khayban-e-Jinnah, Lahore-Pakistan
info@welcos.com.pk www.welcos.com.pk 0300-7222180

EPA CERTIFIED

ISO 9001:2015
ISO 14001:2015
OSHAS 18001:2015

Water, Environment Laboratories & Consultancy Services (WELCOS)

EPA CERTIFIED

Ambient Air Quality Test Report

Reference No.WELCOS/2021/AA/043/3 Date: 31 January, 2021

Name of Industry/ Client: PICHP, Local Government & CD Department

Address: Sahiwal

Nature of Monitoring: Ambient Air

Point Parking Shed, Sahiwal

Analysis Date: 27 January, 2021

Analysis Completion Date 28 January, 2021

Analysis Parameters

Sr. No.	Parameters	PEQS Limits		Concentration	Remarks
		Time-weighted Average	Concentration in Ambient Air (24 Hour)		
1.	Sulphur Dioxide (SO2)	24 hours	120 µg/ m³	10.87	Complies
2.	Oxides Of Nitrogen as (NO)	24 hours	40 µg/ m³	13.27	Complies
3.	Oxides Of Nitrogen as (NO_2)	24 hours	80 µg/ m³	15.72	Complies
4.	Oxides Of Nitrogen as (NOX)	24 hours	120 µg/ m³	28.99	Complies
5.	Ozone (O_3)	24 hours	130 µg/ m³	15	Complies
6.	Respirable Particulate Matter PM_{10}	24 hours	150 µg/ m³	78	Complies
7.	Respirable Particulate Matter $PM_{2.5}$	24 hours	35 µg/m³	19	Complies
8.	Carbon Monoxide (CO)	24 hours	5 mg/m³	0.28	Complies

Terms and Conditions:

- Report cannot be used regarding compliance of any complaint, EPO or any other court case.
- This report should be reproduced as a whole and not in parts.
- This responsibility of the ethical use of the results reported in this report lies with the client.

Prepared By Reviewed By Approved By

----------Report End----------

WATER, ENVIRONMENT LABORATORIES & CONSULTANCY SERVICES (WELCOS) SERVICES WITH QUALITY

No. 20229

29 D, Punjab University Town-II, Khayban-e-Jinnah, Lahore-Pakistan
info@welcos.com.pk www.welcos.com.pk 0300-7222180

EPA CERTIFIED

ISO 9001:2015
ISO 14001:2015
OSHAS 18001:2015

Water, Environment Laboratories & Consultancy Services (WELCOS)

EPA CERTIFIED

Date: 27 January, 2021

Name Of Client	PICIIP, Local Government & CD Department
Reference no:	WELCOS/2021/AA/043/3
Coordinates	30.667395, 73.075801
Location	Parking Shed

Sr No	Time	CO (mg/m^3)	SO_2 (ug/m^3)	NO (ug/m^3)	NO_2 (ug/m^3)	NO_X (ug/m^3)	Ozone (ug/m^3)
1.	15:00	0.30	17.0	13.6	11.9	25.5	15
2.	16:00	0.31	15.9	13.9	13.8	27.7	16
3.	17:00	0.31	14.0	14.5	13.4	27.9	14
4.	18:00	0.31	13.5	14.2	12.1	26.3	15
5.	19:00	0.32	13.7	13.9	12.3	26.2	12
6.	20:00	0.31	13.4	15.3	15.6	30.9	15
7.	21:00	0.31	13.1	15.4	15.9	31.3	15
8.	22:00	0.31	12.0	13.5	19.4	32.9	15
9.	23:00	0.33	12.9	13.2	13.9	27.1	14
10.	00:00	0.31	12.5	13.0	12.5	25.5	15
11.	01:00	0.32	12.4	12.9	16.3	29.2	15
12.	02:00	0.31	13.1	12.7	20.1	32.8	15
13.	03:00	0.31	13.0	12.4	17.6	30	15
14.	04:00	0.32	11.4	11.6	15.6	27.2	15
15.	05:00	0.34	11.0	12.0	17.1	29.1	15
16.	06:00	0.31	9.8	12.5	16.4	28.9	15
17.	07:00	0.32	9.5	12.0	20.2	32.2	14
18.	08:00	0.31	8.0	12.2	16.3	28.5	15
19.	09:00	0.33	8.4	12.4	17.6	30	15
20.	10:00	0.34	7.5	12.5	18.5	31	15
21.	11:00	0.31	6.4	12.6	11.8	24.4	15
22.	12:00	0.30	4.0	13.0	13.2	26.2	15
23.	13:00	0.29	4.5	12.9	18.6	31.5	15
24.	14:00	0.31	3.9	12.6	17.1	29.7	15
Average:		**0.31**	**10.87**	**13.27**	**15.72**	**28.99**	**14**

Signature:

WATER, ENVIRONMENT LABORATORIES & CONSULTANCY SERVICES (WELCOS) SERVICES WITH QUALITY

No. 20232

29 D, Punjab University Town-II, Khayban-e-Jinnah, Lahore-Pakistan

info@welcos.com.pk www.welcos.com.pk 0300-7222180

EPA CERTIFIED

ISO 9001:2015
ISO 14001:2015
OSHAS 18001:2015

Noise Levels

Water, Environment Laboratories & Consultancy Services (WELCOS)

EPA CERTIFIED

Noise Monitoring Test Report

Reference No. WELCOS/BL/2021/N/043/1 Date: 31st January, 2021

Name of Industry/ Proponent: PICIIP, Local Government & CD Department
Address: Parking Shed Capitol Road, Sialkot
Nature Of Sample: Noise
Analysis Date 22-23 January, 2021 **Time:** 14:30
Sample Analyzed By: WELCOS Representative
Analysis Completion Date: 23th January, 2021

Analysis Parameters

Sr. No.	Time	Min.dB(A)	Max. dB(A)
1	14:30	50.5	54.0
2	15:30	50.0	54.8
3	16:30	51.5	54.2
4	17:30	50.5	54.3
5	18:30	51.0	54.5
6	19:30	50.8	54.3
7	20:30	50.2	54.5
8	21:30	48.1	53.2
9	22:30	47.3	54.1
10	23:30	46.9	53.3
11	00:30	45.5	53.1
12	01:30	45.3	52.9
13	02:30	44.9	51.8
14	03:30	43.4	51.2
15	04:30	43.3	50.9
16	05:30	42.3	49.2
17	06:30	41.6	45.6
18	07:30	41.4	45.3
19	08:30	42.7	44.9

No. 19996

WATER, ENVIRONMENT LABORATORIES & CONSULTANCY SERVICES (WELCOS) SERVICES WITH QUALITY

29 D, Punjab University Town-II, Khayban-e-Jinnah, Lahore-Pakistan
info@welcos.com.pk www.welcos.com.pk 0300-7222180

EPA CERTIFIED

DAB
ISO 9001:2015
ISO 14001:2015
OSHAS 18001:2015

Water, Environment Laboratories & Consultancy Services (WELCOS)

EPA CERTIFIED

20	09:30	41.5	44.8
21	10:30	41.3	44.6
22	11:30	42.8	44.8
23	12:30	41.3	44.3
24	01:30	42.1	45.5
Punjab Environmental Quality Standards (PEQS) Day Time Residential Area 55 dB			

PEQS: Punjab Environmental Quality Standards

Terms and Conditions:

- Test was conducted on the request of project proponent for base line study.
- Report cannot be used for any kind of court case
- The report should be reproduced as a whole not in parts
- Duly calibrated instruments were used for analysis.

Prepared By | Reviewed By | Approved By

----------Report End----------

No. 19997

29 D, Punjab University Town-II, Khayban-e-Jinnah, Lahore-Pakistan
info@welcos.com.pk www.welcos.com.pk 0300-7222180

EPA CERTIFIED

ISO 9001:2015
ISO 14001:2015
OSHAS 18001:2015

Water, Environment Laboratories & Consultancy Services (WELCOS)

EPA CERTIFIED

Noise Monitoring Test Report

Reference No. WELCOS/BL/2021/N/043/2 Date: 31st January, 2021

Name of Industry/ Proponent: PICIIP, Local Government & CD Department
Address: Parking Shed Allama Iqbal Town, Sialkot
Nature Of Sample: Noise
Analysis Date 23-24 January, 2021 **Time:** 14:30
Sample Analyzed By: WELCOS Representative
Analysis Completion Date: 24th January, 2021

Analysis Parameters

Sr. No.	Time	Min.dB(A)	Max. dB(A)
1	14:30	50.6	54.3
2	15:30	50.2	54.2
3	16:30	51.4	54.1
4	17:30	50.3	54.7
5	18:30	51.1	54.6
6	19:30	50.4	54.1
7	20:30	50.1	54.2
8	21:30	48.5	53.4
9	22:30	47.6	54.5
10	23:30	46.4	53.1
11	00:30	45.8	53.3
12	01:30	45.4	52.4
13	02:30	44.3	51.4
14	03:30	43.1	51.4
15	04:30	43.6	50.1
16	05:30	42.4	49.3
17	06:30	41.2	45.5
18	07:30	[illegible]	45.4

No. 19998

WATER, ENVIRONMENT LABORATORIES & CONSULTANCY SERVICES (WELCOS) SERVICE WITH QUALITY

29 D, Punjab University Town-II, Khayban-e-Jinnah, Lahore-Pakistan
info@welcos.com.pk www.welcos.com.pk 0300-7222180

EPA CERTIFIED

ISO 9001:2015
ISO 14001:2015
OSHAS 18001:2015

Water, Environment Laboratories & Consultancy Services (WELCOS)

EPA CERTIFIED

19	08:30	42.3	44.4
20	09:30	41.4	44.2
21	10:30	41.7	44.6
22	11:30	42.5	44.4
23	12:30	41.7	44.8
24	01:30	42.6	45.7
Punjab Environmental Quality Standards (PEQS) Day Time Residential Area 55 dB			

PEQS: Punjab Environmental Quality Standards

Terms and Conditions:

- Test was conducted on the request of project proponent for base line study
- Report cannot be used for any kind of court case.
- The report should be reproduced as a whole not in parts
- Duly calibrated instruments were used for analysis

Prepared By Reviewed By Approved By

----------Report End----------

WATER, ENVIRONMENT LABORATORIES & CONSULTANCY SERVICES (WELCOS) SERVICES WITH QUALITY

No. 19999

29 D, Punjab University Town-II, Khayban-e-Jinnah, Lahore-Pakistan

info@welcos.com.pk www.welcos.com.pk 0300-7222180

EPA CERTIFIED

ISO 9001:2015
ISO 14001:2015
OSHAS 18001:2015

Water, Environment Laboratories & Consultancy Services (WELCOS)

EPA CERTIFIED

Noise Monitoring Test Report

Reference No. WELCOS/BL/2021/N/043/3 Date: 31st January, 2021

Name of Industry/ Proponent: PICIIP, Local Government & CD Department
Address: Parking Shed, Sahiwal
Nature Of Sample: Noise
Analysis Date 26-27 January, 2021 **Time:** 14:30
Sample Analyzed By: WELCOS Representative
Analysis Completion Date: 27th January, 2021

Analysis Parameters

Sr. No.	Time	Min.dB(A)	Max. dB(A)
1	14:30	50.4	54.6
2	15:30	50.6	54.4
3	16:30	51.1	54.2
4	17:30	50.4	54.3
5	18:30	51.2	54.7
6	19:30	50.7	54.5
7	20:30	50.6	54.1
8	21:30	48.7	53.5
9	22:30	47.5	54.4
10	23:30	46.6	53.3
11	00:30	45.4	53.8
12	01:30	45.2	52.4
13	02:30	44.3	51.6
14	03:30	43.4	51.7
15	04:30	43.8	50.6
16	05:30	42.4	49.8
17	06:30	41.5	45.6

WATER, ENVIRONMENT LABORATORIES & CONSULTANCY SERVICES (WELCOS)

No. 20000

29 D, Punjab University Town-II, Khayban-e-Jinnah, Lahore-Pakistan
info@welcos.com.pk www.welcos.com.pk 0300-7222180

EPA CERTIFIED

ISO 9001:2015
ISO 14001:2015
OSHAS 18001:2015

Water, Environment Laboratories & Consultancy Services (WELCOS)

EPA CERTIFIED

19	08:30	42.3	44.4
20	09:30	41.4	44.2
21	10:30	41.7	44.6
22	11:30	42.5	44.4
23	12:30	41.7	44.8
24	01:30	42.6	45.7
Punjab Environmental Quality Standards (PEQS) Day Time Residential Area 55 dB			

PEQS: Punjab Environmental Quality Standards

Terms and Conditions:

- Test was conducted on the request of project proponent for base line study
- Report cannot be used for any kind of court case.
- The report should be reproduced as a whole not in parts.
- Duly calibrated instruments were used for analysis.

Prepared By Reviewed By Approved By

----------Report End----------

No. 20001

29 D, Punjab University Town-II, Khayban-e-Jinnah, Lahore-Pakistan
info@welcos.com.pk www.welcos.com.pk 0300-7222180

EPA CERTIFIED

ISO 9001:2015
ISO 14001:2015
OSHAS 18001:2015

Water Quality

Water, Environment Laboratories & Consultancy Services (WELCOS)

EPA CERTIFIED

TEST REPORT OF DRINKING WATER SAMPLE

Reference No. WELCOS/2021/DW/043-1 Date: 31 January, 2021

Client Name	PICIIP, Local Government & CD Department			
Address	Parking Shed Capitol Road, Sialkot			
Sample Identification	Sample # 1			
Sample Collected/Provided	WELCOS Representative			
Date of Sample Received	24 January, 2021	**Date of Starting of Analysis**		24 January, 2021
Date of Completion of Analysis	31 January, 2021	**Grab/Composite**		Grab
Environmental Conditions of lab	**Temperature**	22-28 °C	**Humidity**	<70% RH

Analysis Parameters

Sr.#	Parameters	Units	PEQS	Result	Test Method Used	Remarks
1.	pH	-	6.5-8.5	6.85	APHA 4500H⁺ B	Complies
2.	TDS	mg/l	< 1000	449	APHA 2140 C	Complies
3.	Odor	Unobjectionable	Unobjection able	Unobjection able	Sensory Method	Complies
4.	Taste	Unobjectionable	Unobjection able	Unobjection able	Sensory Method	Complies
5.	Colour (TCU)	Unobjectionable	< 15	Unobjection able	Sensory Method	Complies
6.	Chloride	mg/l	< 250	98	APHA 4500 Cl-B	Complies
7.	Phenolic Compiunds as phenols	mg/l	-	0.04	APHA-5530-C & D USEPA method 420.1	Complies
8.	Hardness	mg/l	< 500	74	APHA 2340 C	Complies
9.	Turbidity	NTU	<5 NTU	0.25	APHA 2130 B	Complies
10.	Fluoride	mg/l	≤ 1.5	0.66	APHA 4500 F D	Complies
11.	Nitrate (NO_3)	mg/l	≤50	1.5	APHA 4500 NO_3-B	Complies
12.	Nitrite (NO_2)	mg/l	≤ 3	0.0011	APHA 4500 NO_2 B	Complies
13.	Cyanide (CN)	mg/l	≤ 0.05	BDL	APHA-4500-CN B & E	Complies
14.	Cadmium	mg/l	0.01	BDL	APHA-3113 B	Complies
15.	Manganese	mg/l	≤0.5	BDL	APHA-3113 B	Complies
16.	Zinc	mg/l	5	0.07	APHA 3111 B	Complies
17.	Arsenic	mg/l	≤ 0.05	0.02	APHA 3113 B	Complies
18.	Copper	mg/l	2	BDL	APHA 3113-B	Complies

No. 19974

WATER ENVIRONMENT LABORATORIES & CONSULTANCY SERVICES (WELCOS)

29 D, Punjab University Town-II, Khayban-e-Jinnah, Lahore-Pakistan

info@welcos.com.pk www.welcos.com.pk 0300-7222180

EPA CERTIFIED

ISO 9001:2015
ISO 14001:2015
OSHAS 18001:2015

Water, Environment Laboratories & Consultancy Services (WELCOS)

EPA CERTIFIED

Sr.#	Parameters	Units	PEQS	Result	Test Method Used	Remarks
19.	Lead	mg/l	≤ 0.05	BDL	APHA 3113-B	Complies
20.	Nickel	mg/l	≤ 0.02	BDL	APHA 3113-B	Complies
21.	Aluminium	mg/l	≤ 0.2	0.03	APHA 3113-B	Complies
22.	Chromium	mg/l	≤ 0.05	BDL	APHA 3113-B	Complies
23.	Mercury	mg/l	≤ 0.001	BDL	APHA 3112 B	Complies
24.	Selenium	mg/l	0.01	BDL	APHA 3114 B	Complies
25.	Antimony	mg/l	≤ 0.005	BDL	APHA 3113-B	Complies
26.	Barium	mg/l	0.7	BDL	APHA 3113 B	Complies
27.	Boron	mg/l	0.3	BDL	APHA 3113-B	Complies
28.	Chlorine	mg/l	1.0	BDL	APHA 4500 Cl^- B & G	Complies
29.	*Total Coliform*	CFU	0	0	APHA 9222 B	Complies
30.	*E.coli*	CFU	0	0	APHA 9222 D	Complies

Abbreviations:

PEQS Pakistan Environmental Quality Standards **BDL** Below Detectable Limit **APHA** American Public Health Association **TNTC** Too Numerous to Count **CFU** Colony Forming Unit **NTU** Nephelometric Turbidity Unit

Terms and Conditions:

- Analysis was conducted on the request of proponent for his own PEQS compliance.
- This report should be produced as a whole and not in parts.
- Grab Sampling is performed from the waste water line before discharge after washing processing unit of industry.
- The sample is retained for 15 days after the issuance date of report from the laboratory.

Disclaimer:

- This test result is based solely on the particular sample(s) identified above, and should not be reported in parts
- In case the sample is collected by client, the responsibility of sample's integrity lies with the client/customer
- While we have taken all reasonable precautions to ensure validity of test results, we do not assume any liability thereof beyond the amount of the fee charged for the analysis/test
- The Party shall assume full responsibility for the ethical use of the results in the test report and we shall be held free from any and all claims, which may result from the use of such data by the clients or others
- After completion of the test, the sample (if required) will be retained for 2 weeks until negotiated otherwise through documented communication
- The contents of this report cannot be, in any manner, used for the publicity of the product or any advertisement

Prepared By Reviewed By Approved By

----------Report End----------

WATER, ENVIRONMENT LABORATORIES & CONSULTANCY SERVICES (WELCOS) SERVICED WITH QUALITY

No. 19975

29 D, Punjab University Town-II, Khayban-e-Jinnah, Lahore-Pakistan
info@welcos.com.pk www.welcos.com.pk 0300-7222180

EPA CERTIFIED

ISO 9001:2015
ISO 14001:2015
OSHAS 18001:2015

Water, Environment Laboratories & Consultancy Services (WELCOS)

EPA CERTIFIED

TEST REPORT OF DRINKING WATER SAMPLE

Reference No. WELCOS/2021/DW/043-2 Date: 31 January, 2021

Client Name	PICIIP, Local Government & CD Department		
Address	Parking Shed Allama Iqbal Town, Sialkot		
Sample Identification	Sample # 2		
Sample Collected/Provided	WELCOS Representative		
Date of Sample Received	24 January, 2021	**Date of Starting of Analysis**	24 January, 2021
Date of Completion of Analysis	31 January, 2021	**Grab/Composite**	Grab
Environmental Conditions of lab	**Temperature** 22-28 °C	**Humidity**	<70% RH

Analysis Parameters

Sr.#	Parameters	Units	PEQS	Result	Test Method Used	Remarks
1.	pH	-	6.5-8.5	6.92	APHA 4500H' B	Complies
2.	TDS	mg/l	< 1000	493	APHA 2140 C	Complies
3.	Odor	Unobjectionable	Unobjection able	Unobjection able	Sensory Method	Complies
4.	Taste	Unobjectionable	Unobjection able	Unobjection able	Sensory Method	Complies
5.	Colour (TCU)	Unobjectionable	< 15	Unobjection able	Sensory Method	Complies
6.	Chloride	mg/l	< 250	85	APHA 4500 Cl-B	Complies
7.	Phenolic Compiunds as phenols	mg/l	-	0.03	APHA-5530-C & D USEPA method 420.1	Complies
8.	Hardness	mg/l	< 500	85	APHA 2340 C	Complies
9.	Turbidity	NTU	<5 NTU	0.33	APHA 2130 B	Complies
10.	Fluoride	mg/l	≤ 1.5	0.36	APHA 4500 F D	Complies
11.	Nitrate (NO_3)	mg/l	≤50	1.4	APHA 4500 NO_3-B	Complies
12.	Nitrite (NO_2)	mg/l	≤ 3	0.0018	APHA 4500 NO_2 B	Complies
13.	Cyanide (CN)	mg/l	≤ 0.05	BDL	APHA-4500-CN B & E	Complies
14.	Cadmium	mg/l	0.01	BDL	APHA-3113 B	Complies
15.	Manganese	mg/l	≤0.5	BDL	APHA-3113 B	Complies
16.	Zinc	mg/l	5	0.02	APHA 3111 B	Complies
17.	Arsenic	mg/l	≤ 0.05	0.03	APHA 3113 B	Complies
18.	Copper	mg/l	2	BDL	APHA 3113-B	Complies

No. 19976

ENVIRONMENT LABORATORIES & CONSULTANCY SERVICES (WELCOS) SERVICES WITH QUALITY

29 D, Punjab University Town-II, Khayban-e-Jinnah, Lahore-Pakistan

info@welcos.com.pk www.welcos.com.pk 0300-7222180

EPA CERTIFIED

ISO 9001:2015
ISO 14001:2015
OSHAS 18001:2015

Water, Environment Laboratories & Consultancy Services (WELCOS)

EPA CERTIFIED

Sr.#	Parameters	Units	PEQS	Result	Test Method Used	Remarks
19.	Lead	mg/l	≤ 0.05	BDL	APHA 3113-B	Complies
20.	Nickel	mg/l	≤ 0.02	BDL	APHA 3113-B	Complies
21.	Aluminium	mg/l	≤ 0.2	0.06	APHA 3113-B	Complies
22.	Chromium	mg/l	≤ 0.05	BDL	APHA 3113-B	Complies
23.	Mercury	mg/l	≤ 0.001	BDL	APHA 3112 B	Complies
24.	Selenium	mg/l	0.01	BDL	APHA 3114 B	Complies
25.	Antimony	mg/l	≤ 0.005	BDL	APHA 3113-B	Complies
26.	Barium	mg/l	0.7	BDL	APHA 3113 B	Complies
27.	Boron	mg/l	0.3	BDL	APHA 3113-B	Complies
28.	Chlorine	mg/l	1.0	BDL	APHA 4500 Cl- B & G	Complies
29.	*Total Coliform*	CFU	0	0	APHA 9222 B	Complies
30.	*E.coli*	CFU	0	0	APHA 9222 D	Complies

Abbreviations:

PEQS Pakistan Environmental Quality Standards **BDL** Below Detectable Limit **APHA** American Public Health Association **TNTC** Too Numerous to Count **CFU** Colony Forming Unit **NTU** Nephelometric Turbidity Unit

Terms and Conditions:

- Analysis was conducted on the request of proponent for his own PEQS compliance.
- This report should be produced as a whole and not in parts.
- Grab Sampling is performed from the waste water line before discharge after washing processing unit of industry.
- The sample is retained for 15 days after the issuance date of report from the laboratory.

Disclaimer:

- This test result is based solely on the particular sample(s) identified above, and should not be reported in parts
- In case the sample is collected by client, the responsibility of sample's integrity lies with the client/customer
- While we have taken all reasonable precautions to ensure validity of test results, we do not assume any liability thereof beyond the amount of the fee charged for the analysis/test
- The Party shall assume full responsibility for the ethical use of the results in the test report and we shall be held free from any and all claims, which may result from the use of such data by the clients or others
- After completion of the test, the sample (if required) will be retained for 2 weeks until negotiated otherwise through documented communication
- The contents of this report cannot be, in any manner, used for the publicity of the product or any advertisement

Prepared By | Reviewed By | Approved By

----------Report End----------

WATER ENVIRONMENT LABORATORIES & CONSULTANCY SERVICES (WELCOS) SERVICES WITH QUALITY

No. 19977

29 D, Punjab University Town-II, Khayban-e-Jinnah, Lahore-Pakistan
info@welcos.com.pk www.welcos.com.pk 0300-7222180

EPA CERTIFIED

ISO 9001:2015
ISO 14001:2015
OSHAS 18001:2015

Water, Environment Laboratories & Consultancy Services (WELCOS)

EPA CERTIFIED

TEST REPORT OF DRINKING WATER SAMPLE

Reference No. WELCOS/2021/DW/043-3 Date: 31 January, 2021

Client Name	PICIIP, Local Government & CD Department		
Address	Parking Shed, Sahiwal		
Sample Identification	Drinking Water		
Sample Collected/Provided	WELCOS Representative		
Date of Sample Received	27 January, 2021	**Date of Starting of Analysis**	27 January, 2021
Date of Completion of Analysis	31 January, 2021	**Grab/Composite**	Grab
Environmental Conditions of lab	**Temperature** 22-28 °C	**Humidity**	<70% RH

Analysis Parameters

Sr.#	Parameters	Units	PEQS	Result	Test Method Used	Remarks
1.	pH	-	6.5-8.5	6.74	APHA 4500H⁺ B	Complies
2.	TDS	mg/l	< 1000	639	APHA 2140 C	Complies
3.	Odor	Unobjectionable	Unobjection able	Unobjection able	Sensory Method	Complies
4.	Taste	Unobjectionable	Unobjection able	Unobjection able	Sensory Method	Complies
5.	Colour (TCU)	Unobjectionable	< 15	Unobjection able	Sensory Method	Complies
6.	Chloride	mg/l	< 250	128	APHA 4500 Cl-B	Complies
7.	Phenolic Compiunds as phenols	mg/l	-	0.04	APHA-5530-C & D USEPA method 420.1	Complies
8.	Hardness	mg/l	< 500	131	APHA 2340 C	Complies
9.	Turbidity	NTU	<5 NTU	0.68	APHA 2130 B	Complies
10.	Fluoride	mg/l	≤ 1.5	0.39	APHA 4500 F D	Complies
11.	Nitrate (NO_3)	mg/l	≤50	1.5	APHA 4500 NO_3-B	Complies
12.	Nitrite (NO_2)	mg/l	≤ 3	0.0021	APHA 4500 NO_2 B	Complies
13.	Cyanide (CN)	mg/l	≤ 0.05	BDL	APHA-4500-CN B & E	Complies
14.	Cadmium	mg/l	0.01	BDL	APHA-3113 B	Complies
15.	Manganese	mg/l	≤0.5	BDL	APHA-3113 B	Complies
16.	Zinc	mg/l	5	0.01	APHA 3111 B	Complies
17.	Arsenic	mg/l	≤ 0.05	0.04	APHA 3113 B	Complies
18.	Copper	mg/l	2	BDL	APHA 3113-B	Complies

No. 19978

WATER ENVIRONMENT LABORATORIES & CONSULTANCY SERVICES (WELCOS) SERVICES WITH QUALITY

29 D, Punjab University Town-II, Khayban-e-Jinnah, Lahore-Pakistan
info@welcos.com.pk www.welcos.com.pk 0300-7222180

EPA CERTIFIED

ISO 9001:2015
ISO 14001:2015
OSHAS 18001:2015

Water, Environment Laboratories & Consultancy Services (WELCOS)

EPA CERTIFIED

Sr.#	Parameters	Units	PEQS	Result	Test Method Used	Remarks
19.	Lead	mg/l	≤ 0.05	BDL	APHA 3113-B	Complies
20.	Nickel	mg/l	≤ 0.02	BDL	APHA 3113-B	Complies
21.	Aluminium	mg/l	≤ 0.2	0.04	APHA 3113-B	Complies
22.	Chromium	mg/l	≤ 0.05	BDL	APHA 3113-B	Complies
23.	Mercury	mg/l	≤ 0.001	BDL	APHA 3112 B	Complies
24.	Selenium	mg/l	0.01	BDL	APHA 3114 B	Complies
25.	Antimony	mg/l	≤ 0.005	BDL	APHA 3113-B	Complies
26.	Barium	mg/l	0.7	BDL	APHA 3113 B	Complies
27.	Boron	mg/l	0.3	BDL	APHA 3113-B	Complies
28.	Chlorine	mg/l	1.0	BDL	APHA 4500 Cl- B & G	Complies
29.	*Total Coliform*	CFU	0	0	APHA 9222 B	Complies
30.	*E.coli*	CFU	0	0	APHA 9222 D	Complies

Abbreviations:

PEQS Pakistan Environmental Quality Standards **BDL** Below Detectable Limit **APHA** American Public Health Association **TNTC** Too Numerous to Count **CFU** Colony Forming Unit **NTU** Nephelometric Turbidity Unit

Terms and Conditions:

- Analysis was conducted on the request of proponent for his own PEQS compliance.
- This report should be produced as a whole and not in parts.
- Grab Sampling is performed from the waste water line before discharge after washing processing unit of industry.
- The sample is retained for 15 days after the issuance date of report from the laboratory.

Disclaimer:

- This test result is based solely on the particular sample(s) identified above, and should not be reported in parts
- In case the sample is collected by client, the responsibility of sample's integrity lies with the client/customer
- While we have taken all reasonable precautions to ensure validity of test results, we do not assume any liability thereof beyond the amount of the fee charged for the analysis/test
- The Party shall assume full responsibility for the ethical use of the results in the test report and we shall be held free from any and all claims, which may result from the use of such data by the clients or others
- After completion of the test, the sample (if required) will be retained for 2 weeks until negotiated otherwise through documented communication
- The contents of this report cannot be, in any manner, used for the publicity of the product or any advertisement

Prepared By Reviewed By Approved By

----------Report End----------

WATER ENVIRONMENT LABORATORIES CONSULTANCY SERVICES (WELCOS)

No. 19979

29 D, Punjab University Town-II, Khayban-e-Jinnah, Lahore-Pakistan
info@welcos.com.pk www.welcos.com.pk 0300-7222180

EPA CERTIFIED

ISO 9001:2015
ISO 14001:2015
OSHAS 18001:2015

Personnel Requirements

S/No.	Position	No	Total Work Experience [years]	Experience In Similar Work [years]
1	Project Manager	02	10	07
2	Site Engineer	02	07	05
3	Construction Supervisor	02	07	05
4	Environmentalist/Health & Safety Officer	02	07	05
5	Surveyor	02	07	05
6	Quantity Surveyor	02	07	05
7	Lab Technician	02	05	03
8	Electrician	02	05	03

Equipment Requirements

S/No.	Equipment Type and Characteristics	Minimum Number Required
1	Tractor with Front Blade and Trolley	02
2	Dumpers	03
3	Hand Roller	02
4	Power Roller	02
5	Concrete Mixer	06
6	Loaders	02
7	Vibrators	09
8	Water Sprinkler and Water Tanker	03
9	Wheel Excavator	03
10	Crane	03
11	Generator	03
12	Mobile Heavy-Duty Light	03
13	Pneumatic Tire Rollers	02
14	Welding Plants	06
15	Grader	02

Section 7 - General Conditions of Contract

Program Management Unit
Punjab Intermediate Cities Improvement Investment Program (PICIIP)
Local Government & Community Development Department, Punjab, Pakistan - 40 B-1, Gulberg 3, MM Alam Road
Lahore, Pakistan

_____

[Name of Employer]

NCB-Works/PICIIP-27: Civil Works for Parking Sheds at Sahiwal and Sialkot including Construction of Boundary Wall and Gate, Surveillance and Security System, Guard / Driver and Equipment, Office Building and Allied Works at Sahiwal and Sialkot

_____

[Name of Contract]

Table of Clauses

A. General .....7-Error! Bookmark not defined.

1. Definitions 7-4
2. Interpretation 7-6
3. Language and Law 7-7
4. Contract Agreement 7-7
5. Assignment 7-7
6. Care and Supply of Documents 7-7
7. Confidential Details 7-7
8. Compliance with Laws 7-8
9. Joint and Several Liability 7-8
10. Project Manager's Decisions 7-9
11. Delegation 7-9
12. Communications 7-9
13. Subcontracting 7-9
14. Other Contractors 7-9
15. Personnel and Equipment 7-9
16. Employer's and Contractor's Risks 7-10
17. Employer's Risks 7-10
18. Contractor's Risks 7-10
19. Insurance 7-10
20. Site Investigation Reports 7-11
21. Contractor to Construct the Works 7-11
22. The Works to Be Completed by the Intended Completion Date 7-11
23. Designs by Contractor and Approval by the Project Manager 7-11
24. Safety 7-11
25. Discoveries 7-12
26. Possession of the Site 7-12
27. Access to the Site 7-12
28. Instructions, Inspections, and Audits 7-12
29. Appointment of the Adjudicator 7-12
30. Procedure for Disputes 7-13

B. Staff and Labor 7-13

31. Forced Labor 7-13
32. Child Labor 7-13
33. Workers' Organizations 7-13
34. Nondiscrimination and Equal Opportunity 7-13

C. Time Control .....7-Error! Bookmark not defined.

35. Program 7-14
36. Extension of the Intended Completion Date 7-14
37. Acceleration 7-15
38. Delays Ordered by the Project Manager 7-15
39. Management Meetings 7-15
40. Early Warning 7-15

D. Quality Control ..... **7-**Error! Bookmark not defined.

41. Identifying Defects 7-16
42. Tests 7-16
43. Correction of Defects 7-16
44. Uncorrected Defects 7-16

E. Cost Control ..... **7-**Error! Bookmark not defined.

45. Contract Price 7-16
46. Changes in the Contract Price 7-16
47. Variations 7-17
48. Cash Flow Forecasts 7-17
49. Payment Certificates 7-17
50. Payments 7-18
51. Compensation Events 7-18
52. Tax 7-19
53. Currencies 7-20
54. Price Adjustment 7-20
55. Retention 7-20
56. Liquidated Damages 7-20
57. Bonus 7-21
58. Advance Payment 7-21
59. Securities 7-21
60. Dayworks 7-21
61. Cost of Repairs 7-22

F. Force Majeure **7-21**

62. Definition of Force Majeure 7-21
63. Notice of Force Majeure 7-22
64. Duty to Minimize Delay 7-22
65. Consequences of Force Majeure 7-22
66. Force Majeure Affecting Subcontractor 7-23
67. Optional Termination, Payment, and Release 7-23
68. Release from Performance 7-23

G. Finishing the Contract **7-24**

69. Completion 7-24
70. Taking Over 7-24
71. Final Account 7-24
72. Operating and Maintenance Manuals 7-25
73. Termination 7-25
74. Fraud and Corruption 7-26
75. Payment upon Termination 7-27
76. Property 7-27
77. Release from Performance 7-28
78. Suspension of ADB Loan or Credit 7-28
79. Eligibility 7-28

General Conditions of Contract

A. General	
1. Definitions	1.1 Boldface type is used to identify defined terms. (a) The **Accepted Contract Amount** means the amount accepted in the Letter of Acceptance for the execution and completion of the Works and the remedying of any defects. (b) The **Activity Schedule** is a schedule of the activities comprising the construction, installation, testing, and commissioning of the Works in a lump sum contract. It includes a lump sum price for each activity, which is used for valuations and for assessing the effects of Variations and Compensation Events. (c) The **Adjudicator** is the person appointed jointly by the Employer and the Contractor to resolve disputes in the first instance, as provided for in GCC 29.1 [Appointment of Adjudicator] hereunder. (d) **Bank** means the financing institutions named in the **Particular Conditions of Contract (PCC)**. (e) **Bill of Quantities** means the priced and completed Bill of Quantities forming part of the Bid. (f) **Compensation Events** are those defined in GCC 51.1 [Compensation Events] hereunder. (g) The **Completion Date** is the date of completion of the Works as certified by the Project Manager, in accordance with GCC 69.1 [Completion]. (h) The **Contract** is the Contract between the Employer and the Contractor to execute, complete, and maintain the Works. It consists of the documents listed in GCC 2.3 below. (i) The **Contractor** is the party whose Bid to carry out the Works has been accepted by the Employer. (j) The **Contractor's Bid** is the completed bidding document submitted by the Contractor to the Employer. (k) The **Contract Price** is the Accepted Contract Amount stated in the Letter of Acceptance and thereafter as adjusted in accordance with the Contract. (l) **Days** are calendar days; months are calendar months. (m) **Dayworks** are varied work inputs subject to payment on a time basis for the Contractor's employees and Equipment, in addition to payments for associated Materials and Plant. (n) A **Defect** is any part of the Works not completed in accordance with the Contract. (o) The **Defects Liability Certificate** is the certificate issued by the Project Manager upon correction of defects by the

Contractor.

(p) The **Defects Liability Period** is the period calculated from the Completion Date where the Contractor remains responsible for remedying defects.

(q) **Drawings** include calculations and other information provided or approved by the Project Manager for the execution of the Contract.

(r) The **Employer** is the party who employs the Contractor to carry out the Works, as specified in the **PCC.**

(s) **Equipment** is the Contractor's machinery and vehicles brought temporarily to the Site to construct the Works.

(t) **Force Majeure** means an exceptional event or circumstance: which is beyond a Party's control; which such Party could not reasonably have provided against before entering into the Contract; which, having arisen, such Party could not reasonably have avoided or overcome; and, which is not substantially attributable to the other Party.

(u) **In writing** or **written** means hand-written, type-written, printed or electronically made, and resulting in a permanent record.

(v) The **Initial Contract Price** is the Contract Price listed in the Employer's Letter of Acceptance.

(w) The **Intended Completion Date** is the date on which it is intended that the Contractor shall complete the Works. The Intended Completion Date is specified in the **PCC**. The Intended Completion Date may be revised only by the Project Manager by issuing an extension of time or an acceleration order.

(x) **Letter of Acceptance** means the formal acceptance by the Employer of the Bid and denotes the formation of the Contract at the date of acceptance.

(y) **Materials** are all supplies, including consumables, used by the Contractor for incorporation in the Works.

(z) **Party** means the Employer or the Contractor, as the context requires.

(aa) **PCC** means Particular Conditions of Contract.

(bb) **Plant** is any integral part of the Works that shall have a mechanical, electrical, chemical, or biological function.

(cc) The **Project Manager** is the person named in the **PCC** (or any other competent person appointed by the Employer and notified to the Contractor, to act in replacement of the Project Manager) who is responsible for supervising the execution of the Works and administering the Contract.

(dd) **Retention Money** means the aggregate of all monies retained by the Employer pursuant to GCC 55.1 [Retention].

(ee) **Schedules** means the document(s) entitled schedules, completed by the Contractor and submitted with the Letter of

		Tender, as included in the Contract. Such document may include the Bill of Quantities, data, lists, and schedules of rates and/or prices. (ff) The **Site** is the area defined as such in the **PCC**. (gg) **Site Investigation Reports** are those that were included in the bidding documents and are factual and interpretative reports about the surface and subsurface conditions at the Site. (hh) **Specification** means the Specification of the Works included in the Contract and any modification or addition made or approved by the Project Manager. (ii) The **Start Date** is given in the **PCC**. It is the latest date when the Contractor shall commence execution of the Works. It does not necessarily coincide with any of the Site Possession Dates. (jj) A **Subcontractor** is a person or corporate body who has a Contract with the Contractor to carry out a part of the work in the Contract, which includes work on the Site. (kk) **Temporary Works** are works designed, constructed, installed, and removed by the Contractor that are needed for construction or installation of the Works. (ll) A **Variation** is an instruction given by the Project Manager which varies the Works. (mm) The **Works** are what the Contract requires the Contractor to construct, install, and turn over to the Employer, as defined in the **PCC.**
2. Interpretation	2.1	In interpreting these GCC, singular also means plural, male also means female or neuter, and the other way around. Headings have no significance. Words have their normal meaning under the language of the Contract unless specifically defined. The Project Manager shall provide instructions clarifying queries about these GCC.
	2.2	If sectional completion is specified in the **PCC**, references in the GCC to the Works, the Completion Date, and the Intended Completion Date apply to any Section of the Works (other than references to the Completion Date and Intended Completion Date for the whole of the Works).
	2.3	The documents forming the Contract shall be interpreted in the following order of priority: (a) Contract Agreement, (b) Letter of Acceptance, (c) Letter of Bid, (d) Particular Conditions of Contract, (e) the List of Eligible Countries that was specified in Section 5 of the bidding document,

	(f) General Conditions of Contract, (g) Specifications, (h) Drawings, (i) Completed Activity Schedules or Bill of Quantities, and (j) any other document listed in the **PCC** as forming part of the Contract.
3. Language and Law	3.1 The language of the Contract and the law governing the Contract are stated in the **PCC**. 3.2 Throughout the execution of the Contract, the Contractor shall comply with the import of goods and services prohibitions in the Employer's country when (a) by an act of compliance with a decision of the United Nations Security Council taken under Chapter VII of the Charter of the United Nations, the Borrower's Country prohibits any import of goods from, or any payments to, a particular country, person, or entity. Where the borrower's country prohibits payments to a particular firm or for particular goods by such an act of compliance, that firm may be excluded.
4. Contract Agreement	4.1 The Parties shall enter into a Contract Agreement within 28 days after the Contractor receives the Letter of Acceptance, unless the Particular Conditions establish otherwise. The Contract Agreement shall be based upon the attached Contract forms in Section 8. The costs of stamp duties and similar charges (if any) imposed by law in connection with entry into the Contract Agreement shall be borne by the Employer.
5. Assignment	5.1 Neither Party shall assign the whole or any part of the Contract or any benefit or interest in or under the Contract. However, either Party (a) may assign the whole or any part with the prior agreement of the other Party, at the sole discretion of such other Party; and (b) may, as security in favor of a bank or financial institution, assign its right to any moneys due, or to become due, under the Contract.
6. Care and Supply of Documents	6.1 The Specification and Drawings shall be in the custody and care of the Employer. Unless otherwise stated in the Contract, two copies of the Contract and of each subsequent Drawing shall be supplied to the Contractor, who may make or request further copies at the cost of the Contractor.
	6.2 Each of the Contractor's Documents shall be in the custody and care of the Contractor, unless and until taken over by the Employer. Unless otherwise stated in the Contract, the Contractor shall supply to the Engineer six copies of each of the Contractor's Documents.
	6.3 The Contractor shall keep, on the Site, a copy of the Contract, publications named in the Specification, the Contractor's Documents (if any), the Drawings and Variations and other communications given under the Contract. The Employer's Personnel shall have the right of

	access to all these documents at all reasonable times. 6.4 If a Party becomes aware of an error or defect in a document which was prepared for use in executing the Works, the Party shall promptly give notice to the other Party of such error or defect.
7. Confidential Details	7.1 The Contractor's and the Employer's Personnel shall disclose all such confidential and other information as may be reasonably required in order to verify the Contractor's compliance with the Contract and allow its proper implementation.
	7.2 Each of them shall treat the details of the Contract as private and confidential, except to the extent necessary to carry out their respective obligations under the Contract or to comply with applicable Laws. Each of them shall not publish or disclose any particulars of the Works prepared by the other Party without the previous agreement of the other Party. However, the Contractor shall be permitted to disclose any publicly available information, or information otherwise required to establish his qualifications to compete for other projects.
	7.3 Notwithstanding the above, the Contractor may furnish to its Subcontractor(s) such documents, data and other information it receives from the Employer to the extent required for the Subcontractor(s) to perform its work under the Contract, in which event the Contractor shall obtain from such Subcontractor(s) an undertaking of confidentiality similar to that imposed on the Contractor under this Clause.
8. Compliance with Laws	8.1 The Contractor shall, in performing the Contract, comply with applicable Laws.
	8.2 Unless otherwise stated in the Particular Conditions, (a) the Employer shall acquire and pay for all permits, approvals, and/or licenses from all local, state, or national government authorities or public service undertakings in the [Employer's Country or country where the Site is located] which (i) such authorities or undertakings require the Employer to obtain in the Employer's name, and (ii) are necessary for the execution of the Contract, including those required for the performance by both the Contractor and the Employer of their respective obligations under the Contract; (b) the Contractor shall acquire and pay for all permits, approvals, and/or licenses from all local, state, or national government authorities or public service undertakings in the [Employer's Country or country where the Site is located] which such authorities or undertakings require the Contractor to obtain in its name and which are necessary for the performance of the Contract, including, without limitation, visas for the Contractor's and Subcontractor's personnel and entry permits for all imported Contractor's Equipment. The Contractor shall acquire all other permits, approvals, and/or licenses that are not the responsibility of the Employer under Subclause 8.2(a) hereof and that are necessary for the

	performance of the Contract. The Contractor shall indemnify and hold harmless the Employer from and against any and all liabilities, damages, claims, fines, penalties, and expenses of whatever nature arising or resulting from the violation of such laws by the Employer or its personnel, including the Subcontractors and their personnel, but without prejudice to Subclause 8.1 hereof.
9. Joint and Several Liability	9.1 If the Contractor is a joint venture of two or more persons, all such persons shall be jointly and severally liable to the Employer for the fulfillment of the provisions of the Contract, and shall designate one of such persons to act as a leader with authority to bind the joint venture. The composition or the constitution of the joint venture shall not be altered without the prior consent of the Employer.
10. Project Manager's Decisions	10.1 Except where otherwise specifically stated, the Project Manager shall decide contractual matters between the Employer and the Contractor in the role representing the Employer.
11. Delegation	11.1 The Project Manager may delegate any of his duties and responsibilities to other people, except to the Adjudicator, after notifying the Contractor, and may cancel any delegation after notifying the Contractor.
12. Communica-tions	12.1 Communications between parties that are referred to in the Conditions shall be effective only when in writing. A notice shall be effective only when it is delivered.
13. Subcontracting	13.1 The Contractor may subcontract with the approval of the Project Manager, but may not assign the Contract without the approval of the Employer in writing. Subcontracting shall not alter the Contractor's obligations.
14. Other Contractors	14.1 The Contractor shall cooperate and share the Site with other contractors, public authorities, utilities, and the Employer between the dates given in the Schedule of Other Contractors, as referred to in the **PCC.** The Contractor shall also provide facilities and services for them as described in the Schedule. The Employer may modify the Schedule of Other Contractors, and shall notify the Contractor of any such modification.
15. Personnel and Equipment	15.1 The Contractor shall employ the key personnel and use the equipment identified in its Bid to carry out the functions stated in the Schedule or other personnel and equipment approved by the Project Manager. The Project Manager shall approve any proposed replacement of key personnel and equipment only if their relevant qualifications or characteristics are substantially equal to or better than those proposed in the Bid.
	15.2 If the Project Manager asks the Contractor to remove a person who is a member of the Contractor's staff or work force, stating the reasons, the Contractor shall ensure that the person leaves the Site within 7 days and has no further connection with the work in the Contract. 15.3 If the Employer, Project Manager, or Contractor determines, that any

	employee of the Contractor be determined to have engaged in corrupt, fraudulent, collusive, coercive, or other prohibited practices during the execution of the Works, then that employee shall be removed in accordance with Clause 15.2 above.
16. Employer's and Contractor's Risks	16.1 The Employer carries the risks which this Contract states are Employer's risks, and the Contractor carries the risks which this Contract states are Contractor's risks.
17. Employer's Risks	17.1 From the Start Date until the Defects Liability Certificate has been issued, the following are Employer's risks: (a) The risk of personal injury, death, or loss of or damage to property (excluding the Works, Plant, Materials, and Equipment), which are due to (i) use or occupation of the Site by the Works or for the purpose of the Works, which is the unavoidable result of the Works, or (ii) negligence, breach of statutory duty, or interference with any legal right by the Employer or by any person employed by or contracted to him except the Contractor. (b) The risk of damage to the Works, Plant, Materials, and Equipment to the extent that it is due to a fault of the Employer or in the Employer's design, or due to war or radioactive contamination directly affecting the country where the Works are to be executed.
	17.2 From the Completion Date until the Defects Liability Certificate has been issued, the risk of loss of or damage to the Works, Plant, and Materials is an Employer's risk except loss or damage due to (a) a Defect which existed on the Completion Date, (b) an event occurring before the Completion Date, which was not itself an Employer's risk, or (c) the activities of the Contractor on the Site after the Completion Date.
18. Contractor's Risks	18.1 From the Starting Date until the Defects Liability Certificate has been issued, the risks of personal injury, death, and loss of or damage to property (including, without limitation, the Works, Plant, Materials, and Equipment) which are not Employer's risks, are Contractor's risks.
19. Insurance	19.1 The Contractor shall provide, in the joint names of the Employer and the Contractor, insurance cover from the Start Date to the end of the Defects Liability Period, in the amounts and deductibles stated in the **PCC** for the following events, which are due to the Contractor's risks: (a) loss of or damage to the Works, Plant, and Materials; (b) loss of or damage to Equipment; (c) loss of or damage to property (except the Works, Plant, Materials, and Equipment) in connection with the Contract; and (d) personal injury or death.

	19.2 Policies and certificates for insurance shall be delivered by the Contractor to the Project Manager for the Project Manager's approval before the Start Date. All such insurance shall provide for compensation to be payable in the types and proportions of currencies required to rectify the loss or damage incurred.
	19.3 If the Contractor does not provide any of the policies and certificates required, the Employer may effect the insurance, which the Contractor should have provided and recover the premiums the Employer has paid from payments otherwise due to the Contractor or, if no payment is due, the payment of the premiums shall be a debt due.
	19.4 Alterations to the terms of an insurance shall not be made without the approval of the Project Manager.
	19.5 Both parties shall comply with any conditions of the insurance policies.
20. Site Investigation Reports	20.1 The Contractor, in preparing the Bid, shall rely on any Site Investigation Reports referred to in the **PCC,** supplemented by any information available to the Contractor.
21. Contractor to Construct the Works	21.1 The Contractor shall construct and install the Works in accordance with the Specifications and Drawings.
22. The Works to Be Completed by the Intended Completion Date	22.1 The Contractor may commence execution of the Works on the Start Date and shall carry out the Works in accordance with the Program submitted by the Contractor, as updated with the approval of the Project Manager, and complete them by the Intended Completion Date.
23. Designs by Contractor and Approval by the Project Manager	23.1 The Contractor shall carry out design to the extent specified in the **PCC**. The Contractor shall promptly submit to the Employer all designs prepared by him. Within 14 days of receipt, the Employer shall notify any comments. The Contractor shall not construct any element of the permanent work designed by him within 14 days after the design has been submitted to the Employer or where the design for that element has been rejected. Design that has been rejected shall be promptly amended and resubmitted. The Contractor shall resubmit all designs commented on, taking these comments into account as necessary.
	23.2 The Contractor shall submit Specifications and Drawings showing the proposed Temporary Works to the Project Manager, who is to approve them if they comply with the Specifications and Drawings..
	23.3 The Contractor shall be responsible for design of Temporary Works.
	23.4 The Project Manager's approval shall not alter the Contractor's responsibility for design of the Temporary Works.

	23.5 The Contractor shall obtain approval of third parties to the design of the Temporary Works, where required.
	23.6 All Drawings prepared by the Contractor for the execution of the temporary or permanent Works, are subject to prior approval by the Project Manager before this use.
24. Safety	24.1 The Contractor shall be responsible for the safety of all activities on the Site.
25. Discoveries	25.1 Anything of historical or other interest or of significant value unexpectedly discovered on the Site shall be the property of the Employer. The Contractor shall notify the Project Manager of such discoveries and carry out the Project Manager's instructions for dealing with them.
26. Possession of the Site	26.1 The Employer shall give possession of all parts of the Site to the Contractor. If possession of a part is not given by the date stated in the **PCC,** the Employer shall be deemed to have delayed the start of the relevant activities, and this shall be a Compensation Event.
27. Access to the Site	27.1 The Contractor shall allow the Project Manager and any person authorized by the Project Manager access to the Site and to any place where work in connection with the Contract is being carried out or is intended to be carried out.
28. Instructions, Inspections, and Audits	28.1 The Contractor shall carry out all instructions of the Project Manager, which comply with the applicable laws where the Site is located. 28.2 The Contractor shall keep, and shall make all reasonable efforts to cause its Subcontractors and sub consultants to keep accurate and systematic accounts and records in respect of the Works in such form and details as will clearly identify relevant time changes and costs.
	28.3 The Contractor shall permit ADB to inspect the Contractor's accounts, records, and other documents relating to the submission of bids and contract performance and to have them audited by auditors appointed by ADB. The Contractor shall maintain all documents and records related to the Contract for a period of three (*3*) years after completion of the Works. The Contractor shall provide any documents necessary for the investigation of allegations of fraud, collusion, coercion, or corruption and require its employees or agents with knowledge of the Contract to respond to questions from ADB.
29. Appointment of the Adjudicator	29.1 The Adjudicator shall be appointed jointly by the Employer and the Contractor, at the time of the Employer's issuance of the Letter of Acceptance. If, in the Letter of Acceptance, the Employer does not agree on the appointment of the Adjudicator, the Employer will request the Appointing Authority designated in the **PCC**, to appoint the Adjudicator within 14 days of receipt of such request.
	29.2 Should the Adjudicator resign or die, or should the Employer and the Contractor agree that the Adjudicator is not functioning in accordance with the provisions of the Contract; a new Adjudicator shall be jointly appointed by the Employer and the Contractor. In case of

	disagreement between the Employer and the Contractor, within 30 days, the Adjudicator shall be designated by the Appointing Authority at the request of either party, within 14 days of receipt of such request.
30. Procedure for Disputes	30.1 If the Contractor believes that a decision taken by the Project Manager was either outside the authority given to the Project Manager by the Contract or that the decision was wrongly taken, the decision shall be referred to the Adjudicator within 14 days of the notification of the Project Manager's decision.
	30.2 The Adjudicator shall give a decision in writing within 28 days of receipt of a notification of a dispute.
	30.3 The Adjudicator shall be paid by the hour at the rate specified in the **PCC,** together with reimbursable expenses of the types specified in the **PCC**, and the cost shall be divided equally between the Employer and the Contractor, whatever decision is reached by the Adjudicator. Either party may refer a decision of the Adjudicator to an Arbitrator within 28 days of the Adjudicator's written decision. If neither party refers the dispute to arbitration within the above 28 days, the Adjudicator's decision shall be final and binding.
	30.4 The arbitration shall be conducted in accordance with the arbitration procedures published by the institution named and in the place specified in the **PCC**.
B. Staff and Labor	
31. Forced Labor	31.1 The Contractor shall not employ forced labor, which consists of any work or service, not voluntarily performed, that is exacted from an individual under threat of force or penalty. This covers any kind of involuntary or compulsory labor, such as indentured labor, bonded labor, or similar labor–contracting arrangements.
32. Child Labor	32.1 The Contractor shall not employ children in a manner that is economically exploitative, or is likely to be hazardous, or to interfere with, the child's education, or to be harmful to the child's health or physical, mental, spiritual, moral, or social development. Where national laws have provisions for employment of minors, the Contractor shall follow those laws applicable to the Contractor. Children below the age of 18 years shall not be employed in dangerous work.
33. Workers' Organizations	33.1 In countries where national law recognizes workers' rights to form and to join workers' organizations of their choosing without interference and to bargain collectively, the Contractor shall comply with national law. Where national law substantially restricts workers' organizations, the Contractor shall enable alternative means for the Contractor's Personnel to express their grievances and protect their rights regarding working conditions and terms of employment. In either case described above, and where national law is silent, the Contractor shall not discourage the Contractor's Personnel from forming or joining workers' organizations of their choosing or from bargaining

	collectively, and shall not discriminate or retaliate against the Contractor's Personnel who participate, or seek to participate, in such organizations and bargain collectively. The Contractor shall engage with such workers representatives. Worker organizations are expected to fairly represent the workers in the workforce.
34. Nondiscrimination and Equal Opportunity	34.1 The Contractor shall not make employment decisions on the basis of personal characteristics unrelated to inherent job requirements. The Contractor shall base the employment relationship on the principle of equal opportunity and fair treatment, and shall not discriminate with respect to aspects of the employment relationship, including recruitment and hiring, compensation (including wages and benefits), working conditions and terms of employment, access to training, promotion, termination of employment or retirement, and discipline. In countries where national law provides for non-discrimination in employment, the Contractor shall comply with national law. When national laws are silent on nondiscrimination in employment, the Contractor shall meet this Sub clause's requirements. Special measures of protection or assistance to remedy past discrimination or selection for a particular job based on the inherent requirements of the job shall not be deemed discrimination.
C. Time Control	
35. Program	35.1 Within the time stated in the **PCC**, after the date of the Letter of Acceptance, the Contractor shall submit to the Project Manager for approval a Program showing the general methods, arrangements, order, and timing for all the activities in the Works. In the case of a lump sum contract, the activities in the Program shall be consistent with those in the Activity Schedule.
	35.2 An update of the Program shall be a program showing the actual progress achieved on each activity and the effect of the progress achieved on the timing of the remaining work, including any changes to the sequence of the activities.
	35.3 The Contractor shall submit to the Project Manager for approval an updated Program at intervals no longer than the period stated in the **PCC.** If the Contractor does not submit an updated Program within this period, the Project Manager may withhold the amount stated in the **PCC** from the next payment certificate and continue to withhold this amount until the next payment after the date on which the overdue Program has been submitted. In the case of a lump sum contract, the Contractor shall provide an updated Activity Schedule within 14 days of being instructed to by the Project Manager.
	35.4 The Project Manager's approval of the Program shall not alter the Contractor's obligations. The Contractor may revise the Program and submit it to the Project Manager again at any time. A revised Program shall show the effect of Variations and Compensation Events.
36. Extension of the Intended Completion	36.1 The Project Manager shall extend the Intended Completion Date if a Compensation Event occurs or a Variation is issued which makes it impossible for Completion to be achieved by the Intended Completion

Date		Date without the Contractor taking steps to accelerate the remaining work, which would cause the Contractor to incur additional cost.
	36.2	The Project Manager shall decide whether and by how much to extend the Intended Completion Date within 21 days of the Contractor asking the Project Manager for a decision upon the effect of a Compensation Event or Variation and submitting full supporting information. If the Contractor has failed to give early warning of a delay or has failed to cooperate in dealing with a delay, the delay by this failure shall not be considered in assessing the new Intended Completion Date.
37. Acceleration	37.1	When the Employer wants the Contractor to finish before the Intended Completion Date, the Project Manager shall obtain priced proposals for achieving the necessary acceleration from the Contractor. If the Employer accepts these proposals, the Intended Completion Date shall be adjusted accordingly and confirmed by both the Employer and the Contractor.
	37.2	If the Contractor's priced proposals for an acceleration are accepted by the Employer, they are incorporated in the Contract Price and treated as a Variation.
38. Delays Ordered by the Project Manager	38.1	The Project Manager may instruct the Contractor to delay the start or progress of any activity within the Works.
39. Management Meetings	39.1	Either the Project Manager or the Contractor may require the other to attend a management meeting. The business of a management meeting shall be to review the plans for remaining work and to deal with matters raised in accordance with the early warning procedure.
	39.2	The Project Manager shall record the business of management meetings and provide copies of the record to those attending the meeting and to the Employer. The responsibility of the parties for actions to be taken shall be decided by the Project Manager either at the management meeting or after the management meeting and stated in writing to all who attended the meeting.
40. Early Warning	40.1	The Contractor shall warn the Project Manager at the earliest opportunity of specific likely future events or circumstances that may adversely affect the quality of the work, increase the Contract Price, or delay the execution of the Works. The Project Manager may require the Contractor to provide an estimate of the expected effect of the future event or circumstance on the Contract Price and Completion Date. The estimate shall be provided by the Contractor as soon as reasonably possible.
	40.2	The Contractor shall cooperate with the Project Manager in making and considering proposals for how the effect of such an event or circumstance can be avoided or reduced by anyone involved in the work and in carrying out any resulting instruction of the Project Manager.

D. Quality Control	
41. Identifying Defects	41.1 The Project Manager shall check the Contractor's work and notify the Contractor of any Defects that are found. Such checking shall not affect the Contractor's responsibilities. The Project Manager may instruct the Contractor to search for a Defect and to uncover and test any work that the Project Manager considers may have a Defect.
42. Tests	42.1 If the Project Manager instructs the Contractor to carry out a test not specified in the Specification to check whether any work has a Defect and the test shows that it does, the Contractor shall pay for the test and any samples. If there is no Defect, the test shall be a Compensation Event.
43. Correction of Defects	43.1 The Project Manager shall give notice to the Contractor of any Defects before the end of the Defects Liability Period, which begins at Completion, and is defined in the **PCC.** The Defects Liability Period shall be extended for as long as Defects remain to be corrected.
	43.2 Every time notice of a Defect is given, the Contractor shall correct the notified Defect within the length of time specified by the Project Manager's notice.
44. Uncorrected Defects	44.1 If the Contractor has not corrected a Defect within the time specified in the Project Manager's notice, the Project Manager shall assess the cost of having the Defect corrected, and the Contractor shall pay this amount.
E. Cost Control	
45. Contract Price	45.1 In the case of an admeasurement contract, the Bill of Quantities shall contain priced items for the Works to be performed by the Contractor. The Bill of Quantities is used to calculate the Contract Price. The Contractor will be paid for the quantity of the work accomplished at the rate in the Bill of Quantities for each item.
	45.2 In the case of a lump sum contract, the Activity Schedule shall contain the priced activities for the Works to be performed by the Contractor. The Activity Schedule is used to monitor and control the performance of activities on which basis the Contractor will be paid. If payment for Materials on Site shall be made separately, the Contractor shall show delivery of Materials to the Site separately on the Activity Schedule.
46. Changes in the Contract Price	46.1 In the case of an admeasurement contract: (a) If the final quantity of the work done differs from the quantity in the Bill of Quantities for the particular item by more than 25%, provided the change exceeds 1% of the Initial Contract Price, the Project Manager shall adjust the rate to allow for the change. (b) The Project Manager shall not adjust rates from changes in quantities if thereby the Initial Contract Price is exceeded by more than 15%, except with the prior approval of the Employer.

	(c) If requested by the Project Manager, the Contractor shall provide the Project Manager with a detailed cost breakdown of any rate in the Bill of Quantities.
	46.2 In the case of a lump sum contract, the Activity Schedule shall be amended by the Contractor to accommodate changes of Program or method of working made at the Contractor's own discretion. Prices in the Activity Schedule shall not be altered when the Contractor makes such changes to the Activity Schedule.
47. Variations	47.1 All Variations shall be included in updated Programs, and, in the case of a lump sum contract, also in the Activity Schedule, produced by the Contractor.
	47.2 The Contractor shall provide the Project Manager with a quotation for carrying out the Variation when requested to do so by the Project Manager. The Project Manager shall assess the quotation, which shall be given within seven (7) days of the request or within any longer period stated by the Project Manager and before the Variation is ordered.
	47.3 If the Contractor's quotation is unreasonable, the Project Manager may order the Variation and make a change to the Contract Price, which shall be based on the Project Manager's own forecast of the effects of the Variation on the Contractor's costs.
	47.4 If the Project Manager decides that the urgency of varying the work would prevent a quotation being given and considered without delaying the work, no quotation shall be given and the Variation shall be treated as a Compensation Event.
	47.5 The Contractor shall not be entitled to additional payment for costs that could have been avoided by giving early warning.
	47.6 In the case of an admeasurement contract, if the work in the Variation corresponds to an item description in the Bill of Quantities and if, in the opinion of the Project Manager, the quantity of work above the limit stated in GCC 46.1 [Changes in the Contract Price] or the timing of its execution do not cause the cost per unit of quantity to change, the rate in the Bill of Quantities shall be used to calculate the value of the Variation. If the cost per unit of quantity changes, or if the nature or timing of the work in the Variation does not correspond with items in the Bill of Quantities, the quotation by the Contractor shall be in the form of new rates for the relevant items of work.
48. Cash Flow Forecasts	48.1 When the Program, or, in the case of a lump sum contract, the Activity Schedule, is updated, the Contractor shall provide the Project Manager with an updated cash flow forecast. The cash flow forecast shall include different currencies, as defined in the Contract, converted as necessary using the Contract exchange rates.
49. Payment Certificates	49.1 The Contractor shall submit to the Project Manager monthly statements of the estimated value of the work executed less the cumulative amount certified previously.

	49.2 The Project Manager shall check the Contractor's monthly statement and certify the amount to be paid to the Contractor.
	49.3 The value of work executed shall be determined by the Project Manager.
	49.4 The value of work executed shall comprise, (a) in the case of an admeasurement contract, the value of the quantities of work in the Bill of Quantities that have been completed; or (b) in the case of a lump sum contract, the value of work executed shall comprise the value of completed activities in the Activity Schedule.
	49.5 The value of work executed shall include the valuation of Variations and Compensation Events.
	49.6 The Project Manager may exclude any item certified in a previous certificate or reduce the proportion of any item previously certified in any certificate in the light of later information.
50. Payments	50.1 Payments shall be adjusted for deductions for advance payments and retention. The Employer shall pay the Contractor the amounts certified by the Project Manager within 28 days of the date of each certificate. If the Employer makes a late payment, the Contractor shall be paid interest on the late payment in the next payment. Interest shall be calculated from the date by which the payment should have been made up to the date when the late payment is made at the prevailing rate of interest for commercial borrowing for each of the currencies in which payments are made.
	50.2 If an amount certified is increased in a later certificate or as a result of an award by the Adjudicator or an Arbitrator, the Contractor shall be paid interest upon the delayed payment as set out in this clause. Interest shall be calculated from the date upon which the increased amount would have been certified in the absence of dispute.
	50.3 Unless otherwise stated, all payments and deductions shall be paid or charged in the proportions of currencies comprising the Contract Price.
	50.4 Items of the Works for which no rate or price has been entered in shall not be paid for by the Employer and shall be deemed covered by other rates and prices in the Contract.
51. Compensation Events	51.1 The following shall be Compensation Events: (a) The Employer does not give access to a part of the Site by the Site Possession Date pursuant to GCC 26.1 [Possession of the Site]. (b) The Employer modifies the Schedule of Other Contractors in a way that affects the work of the Contractor under the Contract. (c) The Project Manager orders a delay or does not issue

	Drawings, Specifications, or instructions required for execution of the Works on time. (d) The Project Manager instructs the Contractor to uncover or to carry out additional tests upon work, which is then found to have no Defects. (e) The Project Manager unreasonably does not approve a subcontract to be let. (f) Ground conditions are substantially more adverse than could reasonably have been assumed before issuance of the Letter of Acceptance from the information issued to Bidders (including the Site Investigation Reports), from information available publicly and from a visual inspection of the Site. (g) The Project Manager gives an instruction for dealing with an unforeseen condition, caused by the Employer, or additional work required for safety or other reasons. (h) Other contractors, public authorities, utilities, or the Employer does not work within the dates and other constraints stated in the Contract, and they cause delay or extra cost to the Contractor. (i) The advance payment is delayed. (j) The effects on the Contractor of any of the Employer's Risks. (k) The Project Manager unreasonably delays issuing a Certificate of Completion.
	51.2 If a Compensation Event would cause additional cost or would prevent the work being completed before the Intended Completion Date, the Contract Price shall be increased and/or the Intended Completion Date shall be extended. The Project Manager shall decide whether and by how much the Contract Price shall be increased and whether and by how much the Intended Completion Date shall be extended.
	51.3 As soon as information demonstrating the effect of each Compensation Event upon the Contractor's forecast cost has been provided by the Contractor, it shall be assessed by the Project Manager, and the Contract Price shall be adjusted accordingly. If the Contractor's forecast is deemed unreasonable, the Project Manager shall adjust the Contract Price based on the Project Manager's own forecast. The Project Manager shall assume that the Contractor shall react competently and promptly to the event.
	51.4 The Contractor shall not be entitled to compensation to the extent that the Employer's interests are adversely affected by the Contractor's not having given early warning or not having cooperated with the Project Manager.
52. Tax	52.1 The Project Manager shall adjust the Contract Price if taxes, duties, and other levies are changed between the date 28 days before the submission of bids for the Contract and the date of the last Completion certificate. The adjustment shall be the change in the amount of tax payable by the Contractor, provided such changes are

	not already reflected in the Contract Price or are a result of GCC 54.1 [Price Adjustment].
53. Currencies	53.1 Where payments are made in currencies other than the currency of the Employer's country specified in the **PCC,** the exchange rates used for calculating the amounts to be paid shall be the exchange rates stated in the Contractor's Bid.
54. Price Adjustment	54.1 Prices shall be adjusted for fluctuations in the cost of inputs only if provided for in the **PCC.** If so provided, the amounts certified in each payment certificate, before deducting for Advance Payment, shall be adjusted by applying the respective price adjustment factor to the payment amounts due in each currency. A separate formula of the type indicated below applies to each Contract currency: $$P_c = A_c + B_c \ Imc/Ioc$$ where: P_c is the adjustment factor for the portion of the Contract Price payable in a specific currency "c." A_c and B_c are coefficients[1] specified in the **PCC,** representing the nonadjustable and adjustable portions, respectively, of the Contract Price payable in that specific currency "c;" and Imc is a consolidated index prevailing at the end of the month being invoiced and Ioc is the same consolidated index prevailing 28 days before Bid opening for inputs payable; both in the specific currency "c."
	54.2 If the value of the index is changed after it has been used in a calculation, the calculation shall be corrected and an adjustment made in the next payment certificate. The index value shall be deemed to take account of all changes in cost due to fluctuations in costs.
55. Retention	55.1 The Employer shall retain from each payment due to the Contractor the proportion stated in the **PCC** until Completion of the whole of the Works.
	55.2 Upon the issue of a Certificate of Completion of the Works by the Project Manager, in accordance with GCC 69.1 [Completion], half the total amount retained shall be repaid to the Contractor and half when the Defects Liability Period has passed and the Project Manager has certified that all Defects notified by the Project Manager to the Contractor before the end of this period have been corrected. The Contractor may substitute retention money with an "on demand" bank guarantee.
56. Liquidated Damages	56.1 The Contractor shall pay liquidated damages to the Employer at the rate per day stated in the **PCC** for each day that the Completion Date is later than the Intended Completion Date. The total amount of

[1] The sum of the two coefficients A_c and B_c should be 1 (one) in the formula for each currency. Normally, both coefficients shall be the same in the formulas for all currencies, since coefficient A, for the nonadjustable portion of the payments, is a very approximate figure (usually 0.10 ~ 0.20) to take account of fixed cost elements or other nonadjustable components. The sum of the adjustments for each currency is added to the Contract Price.

		liquidated damages shall not exceed the amount defined in the **PCC.** The Employer may deduct liquidated damages from payments due to the Contractor. Payment of liquidated damages shall not affect the Contractor's liabilities.
	56.2	If the Intended Completion Date is extended after liquidated damages have been paid, the Project Manager shall correct any overpayment of liquidated damages by the Contractor by adjusting the next payment certificate. The Contractor shall be paid interest on the overpayment, calculated from the date of payment to the date of repayment, at the rates specified in GCC 50.1 [Payments].
57. Bonus	57.1	The Contractor shall be paid a Bonus calculated at the rate per calendar day stated in the **PCC** for each day (less any days for which the Contractor is paid for acceleration) that the Completion is earlier than the Intended Completion Date. The Project Manager shall certify that the Works are complete, although they may not be due to be complete.
58. Advance Payment	58.1	The Employer shall make advance payment to the Contractor of the amounts stated in the **PCC** by the date stated in the **PCC,** against provision by the Contractor of an unconditional bank guarantee in a form and by a bank acceptable to the Employer in amounts and currencies equal to the advance payment. The guarantee shall remain effective until the advance payment has been repaid, but the amount of the guarantee shall be progressively reduced by the amounts repaid by the Contractor. Interest shall not be charged on the advance payment.
	58.2	The Contractor is to use the advance payment only to pay for Equipment, Plant, Materials, and mobilization expenses required specifically for execution of the Contract. The Contractor shall demonstrate that advance payment has been used in this way by supplying copies of invoices or other documents to the Project Manager.
	58.3	The advance payment shall be repaid by deducting proportionate amounts from payments otherwise due to the Contractor, following the schedule of completed percentages of the Works on a payment basis. No account shall be taken of the advance payment or its repayment in assessing valuations of work done, Variations, price adjustments, Compensation Events, Bonuses, or Liquidated Damages.
59. Securities	59.1	The Performance Security shall be provided to the Employer no later than the date specified in the Letter of Acceptance and shall be issued in an amount specified in the **PCC,** by a bank acceptable to the Employer, and denominated in the types and proportions of the currencies in which the Contract Price is payable. The Performance Security shall be valid until a date 28 days from the date of issue of the Certificate of Completion in the case of a bank guarantee.
60. Dayworks	60.1	If applicable, the Dayworks rates in the Contractor's Bid shall be used for small additional amounts of work only when the Project Manager has given written instructions in advance for additional work to be paid

	for in that way.
	60.2 All work to be paid for as Dayworks shall be recorded by the Contractor on forms approved by the Project Manager. Each completed form shall be verified and signed by the Project Manager within 2 days of the work being done.
	60.3 The Contractor shall be paid for Dayworks subject to obtaining signed Dayworks forms.
61. Cost of Repairs	61.1 Loss or damage to the Works or Materials to be incorporated in the Works between the Start Date and the end of the Defects Correction periods shall be remedied by the Contractor at the Contractor's cost if the loss or damage arises from the Contractor's acts or omissions.
F. Force Majeure	
62. Definition of Force Majeure	62.1 In this Clause, "Force Majeure" means an exceptional event or circumstance, (a) which is beyond a Party's control; (b) which such Party could not reasonably have provided against before entering into the Contract; (c) which, having arisen, such Party could not reasonably have avoided or overcome; and (d) which is not substantially attributable to the other Party.
	62.2 Force Majeure may include, but is not limited to, exceptional events or circumstances of the kind listed below, so long as conditions (a) to (d) above are satisfied: (a) war, hostilities (whether war be declared or not), invasion, act of foreign enemies; (b) rebellion, terrorism, sabotage by persons other than the Contractor's Personnel, revolution, insurrection, military or usurped power, or civil war; (c) riot, commotion, disorder, strike or lockout by persons other than the Contractor's Personnel; (d) munitions of war, explosive materials, ionizing radiation or contamination by radio-activity, except as may be attributable to the Contractor's use of such munitions, explosives, radiation or radio-activity; and (e) natural catastrophes such as earthquake, hurricane, typhoon, or volcanic activity.
63. Notice of Force Majeure	63.1 If a Party is or will be prevented from performing its substantial obligations under the Contract by Force Majeure, then it shall give notice to the other Party of the event or circumstances constituting the Force Majeure and shall specify the obligations, the performance of which is or will be prevented. The notice shall be given within 14 days after the Party became aware, or should have become aware, of the relevant event or circumstance constituting Force Majeure.

	63.2 The Party shall, having given notice, be excused performance of its obligations for so long as such Force Majeure prevents it from performing them.
	63.3 Notwithstanding any other provision of this Clause, Force Majeure shall not apply to obligations of either Party to make payments to the other Party under the Contract.
64. Duty to Minimize Delay	64.1 Each Party shall at all times use all reasonable endeavours to minimize any delay in the performance of the Contract as a result of Force Majeure.
	64.2 A Party shall give notice to the other Party when it ceases to be affected by the Force Majeure.
65. Consequences of Force Majeure	65.1 If the Contractor is prevented from performing its substantial obligations under the Contract by Force Majeure of which notice has been given under GCC Subclause 63 [Notice of Force Majeure], and suffers delay and/or incurs Cost by reason of such Force Majeure, the Contractor shall be entitled subject to GCC Subclause 30.1 [Procedure for Disputes] to (a) an extension of time for any such delay, if completion is or will be delayed, under GCC Subclause 36 [Extension of the Intended Completion Date]; and (b) if the event or circumstance is of the kind described in sub-paragraphs (a) to (d) of GCC Subclause 62.2 [Definition of Force Majeure] and, in the case of subparagraphs (b) to (d), occurs in the Country, payment of any such Cost, including the costs of rectifying or replacing the Works and/or Goods damaged or destructed by Force Majeure, to the extent they are not indemnified through the insurance policy referred to in GCC Subclause 19 [Insurance].
	65.2 After receiving this notice, the Project Manager shall proceed in accordance with GCC Subclause 10 [Project Manager's Decisions] to agree or determine these matters.
66. Force Majeure Affecting Subcontractor	66.1 If any Subcontractor is entitled under any contract or agreement relating to the Works to relief from force majeure on terms additional to or broader than those specified in this Clause, such additional or broader Force Majeure events or circumstances shall not excuse the Contractor's nonperformance or entitle him to relief under this Clause.
67. Optional Termination, Payment and Release	67.1 If the execution of substantially all the Works in progress is prevented for a continuous period of 84 days by reason of Force Majeure of which notice has been given under GCC Subclause 63 [Notice of Force Majeure], or for multiple periods which total more than 140 days due to the same notified Force Majeure, then either Party may give to the other Party a notice of termination of the Contract. In this event, the termination shall take effect 7 days after the notice is given, and the Contractor shall proceed in accordance with GCC Subclause 73.5 [Termination].

	67.2 Upon such termination, the Project Manager shall determine the value of the work done and issue a Payment Certificate, which shall include (a) the amounts payable for any work carried out for which a price is stated in the Contract; (b) the Cost of Plant and Materials ordered for the Works which have been delivered to the Contractor, or of which the Contractor is liable to accept delivery: this Plant and Materials shall become the property of (and be at the risk of) the Employer when paid for by the Employer, and the Contractor shall place the same at the Employer's disposal; (c) other Costs or liabilities which in the circumstances were reasonably and necessarily incurred by the Contractor in the expectation of completing the Works; (d) the Cost of removal of Temporary Works and Contractor's Equipment from the Site and the return of these items to the Contractor's works in his country (or to any other destination at no greater cost); and (e) the Cost of repatriation of the Contractor's staff and labor employed wholly in connection with the Works at the date of termination.
68. Release from Performance	68.1 Notwithstanding any other provision of this Clause, if any event or circumstance outside the control of the Parties (including, but not limited to, Force Majeure) arises, which makes it impossible or unlawful for either or both Parties to fulfill its or their contractual obligations or which, under the law governing the Contract, entitles the Parties to be released from further performance of the Contract, then upon notice by either Party to the other Party of such event or circumstance, (a) the Parties shall be discharged from further performance, without prejudice to the rights of either Party in respect of any previous breach of the Contract; and (b) the sum payable by the Employer to the Contractor shall be the same as would have been payable under GCC Subclause 67 [Optional Termination, Payment and Release] if the Contract had been terminated under GCC Subclause 67.
	G. Finishing the Contract
69. Completion	69.1 The Contractor shall request the Project Manager to issue a certificate of Completion of the Works, and the Project Manager shall do so upon deciding that the work is completed.
70. Taking Over	70.1 The Employer shall take over the Site and the Works within 7 days of the Project Manager's issuing a certificate of Completion.
71. Final Account	71.1 The Contractor shall supply the Project Manager with a detailed account of the total amount that the Contractor considers payable under the Contract before the end of the Defects Liability Period. The Project Manager shall issue a Defects Liability Certificate and certify any final payment that is due to the Contractor within 56 days of

	receiving the Contractor's account if it is correct and complete. If it is not, the Project Manager shall issue within 56 days a schedule that states the scope of the corrections or additions that are necessary. If the Final Account is still unsatisfactory after it has been resubmitted, the Project Manager shall decide on the amount payable to the Contractor and issue a payment certificate.
72. Operating and Maintenance Manuals	72.1 If "as built" Drawings and/or operating and maintenance manuals are required, the Contractor shall supply them by the dates stated in the **PCC.**
	72.2 If the Contractor does not supply the Drawings and/or manuals by the dates stated in the **PCC** pursuant to GCC 72.1**,** or they do not receive the Project Manager's approval, the Project Manager shall withhold the amount stated in the **PCC** from payments due to the Contractor.
73. Termination	73.1 The Employer or the Contractor may terminate the Contract if the other party causes a fundamental breach of the Contract.
	73.2 Fundamental breaches of Contract shall include, but shall not be limited to, the following: (a) the Contractor stops work for 28 days when no stoppage of work is shown on the current Program and the stoppage has not been authorized by the Project Manager; (b) the Project Manager instructs the Contractor to delay the progress of the Works, and the instruction is not withdrawn within 28 days; (c) the Employer or the Contractor is made bankrupt or goes into liquidation other than for a reconstruction or amalgamation; (d) a payment certified by the Project Manager is not paid by the Employer to the Contractor within 84 days of the date of the Project Manager's certificate; (e) the Project Manager gives Notice that failure to correct a particular Defect is a fundamental breach of Contract and the Contractor fails to correct it within a reasonable period of time determined by the Project Manager; (f) the Project Manager gives two consecutive Notices to update the Program and accelerate the works to ensure compliance with GCC Subclause 22.1 [The Works to be Completed by the Intended Completion Date] and the Contractor fails to update the Program and demonstrate acceleration of the works within a reasonable period of time determined by the Project Manager; (g) the Contractor does not maintain a Security, which is required; (h) the Contractor has delayed the completion of the Works by the number of days for which the maximum amount of liquidated damages can be paid, as defined in the **PCC**; and (i) if the Contractor, in the judgment of the Employer has engaged in corrupt or fraudulent practices in competing for or in executing the Contract, pursuant to GCC 74.1 [Fraud and

	Corruption].
	73.3 When either party to the Contract gives notice of a breach of Contract to the Project Manager for a cause other than those listed under GCC 73.2 above, the Project Manager shall decide whether the breach is fundamental or not.
	73.4 Notwithstanding the above, the Employer may terminate the Contract for convenience.
	73.5 If the Contract is terminated, the Contractor shall stop work immediately, make the Site safe and secure, and leave the Site as soon as reasonably possible.
74. Fraud and Corruption	74.1 ADB's Anticorruption Policy requires Borrowers (including beneficiaries of ADB-financed activity), as well as Contractors, Subcontractors, Manufacturers, and Consultants under ADB-financed contracts, observe the highest standard of ethics during the procurement and execution of such contracts. In pursuance of this policy, the ADB (a) defines, for the purposes of this provision, the terms set forth below as follows: (i) "corrupt practice" means the offering, giving, receiving, or soliciting, directly or indirectly, anything of value to influence improperly the actions of another party; (ii) "fraudulent practice" means any act or omission, including a misrepresentation, that knowingly or recklessly misleads, or attempts to mislead, a party to obtain a financial or other benefit or to avoid an obligation; (iii) "coercive practice" means impairing or harming, or threatening to impair or harm, directly or indirectly, any party or the property of the party to influence improperly the actions of a party; (iv) "collusive practice" means an arrangement between two or more parties designed to achieve an improper purpose, including influencing improperly the actions of another party; (v) "obstructive practice" means (a) deliberately destroying, falsifying, altering, or concealing of evidence material to an ADB investigation; (b) making false statements to investigators in order to materially impede an ADB investigation; (c) failing to comply with requests to provide information, documents, or records in connection with an Office of Anticorruption and Integrity (OAI) investigation; (d) threatening, harassing, or intimidating any party to prevent it from disclosing its knowledge of matters relevant to the investigation or from pursuing the investigation, or (e) materially impeding ADB's contractual rights of audit or access to information; and (vi) "integrity violation" is any act which violates ADB's Anticorruption Policy, including (i) to (v) above and the following: abuse, conflict of interest, violations of ADB

	sanctions, retaliation against whistleblowers or witnesses, and other violations of ADB's Anticorruption Policy, including failure to adhere to the highest ethical standard. (b) will reject a proposal for award if it determines that the Bidder recommended for award has, directly or through an agent, engaged in corrupt, fraudulent, collusive, coercive, or obstructive practices or other integrity violations in competing for the Contract; (c) will cancel the portion of the financing allocated to a contract if it determines at any time that representatives of the borrower or of a beneficiary of ADB-financing engaged in corrupt, fraudulent, collusive, coercive, or obstructive practices or other integrity violations during the procurement or the execution of that contract, without the borrower having taken timely and appropriate action satisfactory to ADB to remedy the situation; and (d) will impose remedial actions on a firm or an individual, at any time, in accordance with ADB's Anticorruption Policy and Integrity Principles and Guidelines (both as amended from time to time), including declaring ineligible, either indefinitely or for a stated period of time, to participate[2] in ADB-financed, -administered, or -supported activities or to benefit from an ADB-financed, -administered, or -supported contract, financially or otherwise, if it at any time determines that the firm or individual has, directly or through an agent, engaged in corrupt, fraudulent, collusive, coercive, or obstructive practices or other integrity violations.
75. Payment upon Termination	75.1 If the Contract is terminated because of a fundamental breach of Contract by the Contractor, the Project Manager shall issue a certificate for the value of the work done and Materials ordered less advance payments received up to the date of the issue of the certificate and less the percentage to apply to the value of the work not completed, as indicated in the **PCC.** Additional Liquidated Damages shall not apply. If the total amount due to the Employer exceeds any payment due to the Contractor, the difference shall be a debt payable to the Employer.
	75.2 If the Contract is terminated for the Employer's convenience or because of a fundamental breach of Contract by the Employer, the Project Manager shall issue a certificate for the value of the work done, Materials ordered, the reasonable cost of removal of Equipment, repatriation of the Contractor's personnel employed solely on the Works, and the Contractor's costs of protecting and securing the Works, and less advance payments received up to the date of the certificate.
76. Property	76.1 All Materials on the Site, Plant, Equipment, Temporary Works, and Works shall be deemed to be the property of the Employer if the

[2] Whether as a Contractor, Nominated Subcontractor, Consultant, Manufacturer or Supplier, or Service Provider; or in any other capacity (different names are used depending on the particular Bidding Document). A Nominated Subcontractor is one which either has been (i) included by the Bidder in its prequalification application or bid because it brings specific and critical experience and know-how that are accounted for in the evaluation of the Bidder's prequalification application or the bid; or (ii) appointed by the Employer.

	Contract is terminated because of the Contractor's default.
77. Release from Performance	77.1 If the Contract is frustrated by the outbreak of war or by any other event entirely outside the control of either the Employer or the Contractor, the Project Manager shall certify that the Contract has been frustrated. The Contractor shall make the Site safe and stop work as quickly as possible after receiving this certificate and shall be paid for all work carried out before receiving it and for any work carried out afterward to which a commitment was made.
78. Suspension of ADB Loan or Credit	78.1 In the event that ADB suspends the Loan or Credit to the Employer, from which part of the payments to the Contractor are being made, (a) the Employer is obligated to notify the Contractor, with copy to the Project Manager, of such suspension within 7 days of having received ADB's suspension notice. (b) if the Contractor has not received sums due it within the 28 days for payment provided for in GCC 50.1 [Payments], the Contractor may immediately issue a 14-day termination notice.
79. Eligibility	79.1 The Contractor shall have the nationality of an eligible country as specified in Section 5 [Eligible Countries] of the bidding document. The Contractor shall be deemed to have the nationality of a country if the Contractor is a citizen or is constituted, incorporated, or registered, and operates in conformity with the provisions of the laws of that country. This criterion shall also apply to the determination of the nationality of proposed subcontractors or suppliers for any part of the Contract including related services.
	79.2 The materials, equipment, and services to be supplied under the Contract shall have their origin in eligible source countries as specified in Section 5 [Eligible Countries] of the bidding document and all expenditures under the Contract will be limited to such materials, equipment, and services. At the Employer's request, the Contractor may be required to provide evidence of the origin of materials, equipment, and services.
	79.3 For purposes of GCC 79.2, "origin" means the place where the materials and equipment are mined, grown, produced, or manufactured, and from which the services are provided. Materials and equipment are produced when, through manufacturing, processing, or substantial or major assembling of components, a commercially recognized product results that differs substantially in its basic characteristics or in purpose or utility from its components.

Section 8 - Particular Conditions of Contract

The following Particular Conditions of Contract shall supplement the GCC. Whenever there is a conflict, the provisions herein shall prevail over those in the GCC.

Particular Conditions of Contract

A. General	
GCC 1.1 (d)	The financing institutions is **Asian Development Bank**
GCC 1.1 (r)	The Employer is **Local Government & Community Development Department, Government of Punjab** **Authorized Representative:** **Program Management Unit, (PMU), Punjab Intermediate Cities Improvement Investment Program (PICIIP), Local Government & Community Development Department, Punjab, Pakistan**
GCC 1.1 (w)	The Intended Completion Date for the whole of the Works shall be: **Two Hundred and Forty Four (244) days**
GCC 1.1 (cc)	The Project Manager is the **Deputy Team Leader/SRE** nominated by the Project Engineering Procurement and Construction Management Consultants (EPCM). **Authorized Representative: Resident Engineer**
GCC 1.1 (ff)	The Site is located in **Sahiwal and Sialkot.**
GCC 1.1 (ii)	The Start Date shall be **Twenty-One (21) days from signing of the Contract**
GCC 1.1 (mm)	The Works consist of: **Civil Works for Parking Sheds at Sahiwal and Sialkot including Construction of Boundary Wall and Gate, Surveillance and Security System, Guard / Driver and Equipment, Office Building and Allied Works at Sahiwal and Sialkot** Which include execution of all the items identified in the Drawings, Specifications, BOQ and Contract documents
GCC 2.2	Sectional Completions are: **Not Applicable**
GCC 2.3 (j)	The following documents also form part of the Contract: **a. Site Specific Environmental Management Plan (SSEMP)** **b. Site Specific Health and Safety Management Plan (SSHSMP)** **c. Details of Personnel** **d. Details of Equipment** **e. Method statement and Implementation Schedule (including mobilization and construction schedule)** **f. COVID-19 Specific Site Health and Safety Management Plan**
GCC 3.1	The language of the contract is **English.** The law that applies to the Contract is the law of **Islamic Republic of Pakistan**
GCC 10	Add a second paragraph: *"The Project Manager shall provide within 5 working days the following information, as prepared by the Project Manager and/or received from the Contractor, to the*

	Employer's Authorized Representative: *i. Proposal for Extension of the Intended Completion Date prepared under Clause 36;* *ii. Early Warning received from Contractor under Clause 40;* *iii. Changes in the Contract Price determined by the Project Manager under Clause 46;* *iv. Variations Requested by the Project Manager, quotations received from the Contractor and determined by the Project Manger under Clause 47;* *v. Compensation Event determined by the Project Manager under Clause 51;* *vi. Request for issuing the Completion certificate requested by the Contractor under Clause 69"*
GCC 11.1	The Project Manager **may delegate** any of his/her duties and responsibilities subject to prior approval of the Employer.
GCC 14.1	Schedule of other contractors: **Not Applicable**
GCC 19.1	The minimum insurance amounts and deductibles shall be: (a) for loss or damage to the Works, Plant and Materials: **110% of the contract price** (b) for loss or damage to Equipment: **Full Replacement Value** (c) for loss or damage to property (except the Works, Plant, Materials, and Equipment) in connection with Contract: **100% of the loss occurred** (d) for personal injury or death: (i) of the Contractor's employees: **PKR 500,000/- in case of the injury for each occurrence and PKR 2,000,000/- in case of death for each occurrence. (Occurrences unlimited)** (ii) of other people: **same as above** (iii) The maximum deductible amount shall be "**PKR Five (5) Million"** against event under Para (a) herein above whereas "**Nil"** against events under Para (b), (c) and (d). The insurance will be from the companies rated "A" or higher by Pakistan Credit Rating Agency Limited.
GCC 20.1	Site Investigation Reports are: **Nil**
GCC 22.1	Please add the following at the end Sub-Clause 22.1 *"The Contractor shall adequately record the condition of roads, adjoining land and other infrastructure prior to the start of transporting materials, goods and equipment, and construction."*
GCC 23.1	The following shall be designed by the Contractor: **Not Applicable**
GCC 24.1	*Following shall replace text under Sub-Clause 24.1:* *"The Contractor shall at all times take all reasonable precautions to maintain the health and safety of the Contractor's Personnel and to provide a safe work environment to both female and male workers.* *The Contractor shall: (a) comply with applicable core labor standards and labor laws, and incorporate applicable workforce occupational safety norms; (b) comply*

	with the applicable provisions of the Gender Action Plan, including equal pay to men and women for the same type of work and enabling working conditions for female workers; (c) to the extent possible, maximize employment of local poor and disadvantaged persons for project construction purposes, provided that the requirement for job and efficiency are adequately met; and (d) provide safe working conditions. *The Contractor shall disseminate information (in local languages) on the risks of sexually-transmitted diseases, including HIV/AIDs, in health and safety program for all construction works at campsites. Compliance to the foregoing will be strictly monitored by the Employer.* *In particular, the Contractor is responsible for providing site workers with safe and healthy working conditions and establish an operating system to prevent accidents, injuries, and disease.*
GCC 24.2	*Please add the following as Sub-Clause 24.2:* *"The Contractor is responsible for establishment of preventive and emergency preparedness and response measures to avoid, and where avoidance is not possible, to minimize, adverse impacts and risks of the construction site work to the health and safety of local communities.* *Within 14 days of the Start Date the Contractor shall submit a detailed Site-Specific Health and Safety Management Plan (SSHSMP) for the Project Manager's no objection showing how he/she intends to comply with the local Health and Safety laws and regulations and other specific requirements prescribed in the Contract, taking into account the Supplementary Information in Section 6- Employer's Requirements. Work shall not commence on the Site until the confirmation of no objection of the SSHSMP has been obtained from the Project Manager and is being implemented. Such confirmation of no objection by the Project Manager shall not relive the Contractor of any of his/her obligations or responsibilities under the Contract.* *Where unanticipated health and safety hazards or risks become apparent during the Contract, the Contractor is required to update the SSHSMP to outline the potential impacts to site works and associated mitigation measures for the Project Manager's no objection.* *The Contractor shall comply with the approved SSHSMP and any corrective or preventative actions set out in safeguards monitoring reports that the Employer will prepare from time to time to monitor the implementation of the project EMP through the SSHSMP.* *In particular, the Contractor is required to provide all personnel on site including Employer's Personnel and visitors with personal protective equipment, including protection for feet (safety boots), head, eyes, ears (safety helmets) and hands, etc. in accordance with the Contractor's SSHSMP. The Contractor should ensure that his Subcontractors comply with the SSHSMP and provide all such necessary equipment to their personnel.* *The Contractor shall bear the costs to ensure that such measures, requirements and actions are carried out.* *The Contractor shall submit semi-annual reports on the compliance of such measures to the Employer.* *In the event of a significant injury involving medical treatment or hospitalization and fatal accident the Contractor shall notify the Project Manager immediately by verbal communication and submit a formal report as soon as practicable after its*

	occurrence. For all accidents, whether fatal or not, the Contractor shall also notify the appropriate local authorities in accordance with the Laws of the Country."
GCC 26.1	The Site Possession Date(s) shall be: within **Fourteen (14)** days from signing of the Contract. The Contractor shall sign and handover the site possession certificate to the Employer within **Five (5)** days of information by the Employer that site is ready to be taken over.
GCC 27.2	Please add the following as Sub-Clause 27.2: *"The Contractor shall comply with (i) the measures and requirements relevant to the Contractor which are set forth in the Resettlement Plan ("RP"), to the extent it concerns impacts on affected people during construction; and (ii) any corrective or preventive actions set out in safeguards monitoring reports that the Employer will prepare from time to time to monitor implementation of the resettlement plan.* *The Contractor shall allocate a budget for compliance with these measures, requirements and actions."*
GCC 29.1	Appointing Authority for the Adjudicator: **Pakistan Engineering Council, Islamabad**
GCC 30.3	The Adjudicator shall be paid by the hour at the rate of: **PKR 2,000 (two thousand)** The reimbursable expenses are: **Actual transportation expenses incurred. Transportation expenses should be by economy class travel whether by air or land. Adjudicator shall be entitled to a per diem of PKR Ten thousand (10,000) per day.**
GCC 30.4	Institution whose arbitration procedures shall be used: Arbitration shall be carried out in accordance with the rules and provision of **Arbitration Act 1940 of Islamic Republic of Pakistan**. The place of arbitration shall be "Lahore, Punjab, Islamic Republic of Pakistan".
GCC 32.1	Please add the following at the end of Sub-Clause 32.1: *"'Child' means a child below the statutory minimum age of 14 under applicable national, provincial or law of Pakistan."*
GCC 34.2	Following new sub clause is added as Sub-Clause 34.2: The Contractor shall (i) comply with Pakistan's (a) labour laws and regulations applicable to the Contractors Personnel, including male and female staff, consultants, contractors, and agents; and (b) incorporate workplace occupational safety norms; and (ii) allow freedom of association and effectively recognize the right to collective bargaining. Employment opportunities shall be offered to women, as skilled or unskilled workers. The Contractor shall offer incentives to attract women as unskilled workers under cash-for work program to the extent possible. These incentives could include widely announcing employment opportunities and recruitment notices through the most appropriate communication means to target local women. Equal pay for equal work and basic facilities (separate toilets, clean water) are provided for women." The Contractor shall ensure that its employees and Subcontractors observe the highest ethical standards and refrain from any form of bullying, discrimination, misconduct and harassment, including sexual harassment and shall, at all times,

	behave in a manner that creates an environment free of unethical behavior, bullying, misconduct and harassment, including sexual harassment. The Contractor shall take appropriate action against any employees or Subcontractors, including suspension or termination of employment or sub-contract, if any form of unethical or inappropriate behavior is identified. The Contractor shall conduct training programs for its employees and Subcontractors to raise awareness on and prevent any form of bullying, discrimination, misconduct and harassment including sexual harassment, and to promote a respectful work environment. The Contractor shall keep an up-to-date record of its employees and Subcontractors who have attended and completed such training programs and provide such records to the Employer or the Project Manager at their first written request.
C. Time Control	
GCC 35.1	The Contractor shall submit for approval a Program for the Works within **Twenty-Eight (28) days** from the date of the Letter of Acceptance. The program shall be submitted in the form of MS Project or other similar software (3 Nos. hard and soft copies) by allocating the equipment and other resources, moreover, the critical activities shall be identified. The program shall include information on equipment for the Contract consistent with its proposal regarding work methods, scheduling, and material sourcing in sufficient detail as advised and approved by the Project Manager. The Contractor shall include as part of its program submitted, a detail forecasted cash flow in a format acceptable to the Project Manager.
GCC 35.3	The period between Program updates is **Fourteen (14) days**. If the progress of works is slow, or an acceleration of work is required, or unforeseeable circumstances warrant/require an increase in progress then the Project Manager may also instruct the Contractor to submit the update within a period of **Seven (7) days.** The amount to be withheld for late submission of an updated Program is **PKR Five Hundred Thousand (500,000).** **Following is added:** The Contractor shall provide the Employer with quarterly reports of its activities, including each of its obligations under Sub-Clauses 8, 24, and 34.
D. Quality Control	
GCC 40.1	Following text is added; *"In addition to the foregoing, the Contractor shall provide the Project Manager with a written notice of any unanticipated environmental or resettlement risks or impacts on both women and men that arise during construction, implementation or operation of the Permanent Works, which were not considered in the Initial Environmental Examination, the Environmental Management Plan or the Resettlement Plan"*
GCC 43.1	The Defects Liability Period ***from the Completion Date*** is: Three Hundred and Sixty Five **(365)** days
E. Cost Control	

SCC 49.7	Please add following as the new Sub-Clause 49.7: " *(a) The Contractor shall be entitled to receive from the Employer an amount for Materials as "Secured Advance" against an indemnity bond acceptable to the Employer (Form provided in Section 9) of such sum as the Project Manager may consider proper in respect of the Materials (listed in the Schedules for payment and) delivered to the Site but not yet incorporated in the Permanent Works provided that:* *i. The Materials are in accordance with the Specifications for the Works;* *ii. Such Materials have been delivered to the Site and are properly stored and protected against loss or damage or deterioration to the satisfaction of the Project Manager but at the risk and cost of the Contractor;* *iii. The Contractor's records of the requirements, orders, receipts and use of Materials are kept in a form approved by the Project Manager, and such records shall be available for inspection by the Project Manager;* *iv. The Contractor shall submit with his monthly statement the estimated value of the Materials on Site together with such documents as may be required by the Project Manager for the purpose of valuation of Materials and providing evidence of ownership and payment therefore;* *v. Ownership of such Materials shall be deemed to vest in the Employer and these Materials shall not be removed from the Site or otherwise disposed off without written permission of the Employer; and* *vi. The sum payable for such Materials on Site shall not exceed 80% of the (i) landed cost of imported Materials, or (ii) ex-factory / ex-warehouse price of locally manufactured or produced Materials, or (iii) market price of other Materials, also keeping in view value of the Materials under the Contract taking into account the unit rates of the corresponding items of payment in the Bills of Quantity.* *(b) The "Secured Advance" paid to the Contractor under the above provisions shall be recovered through deductions from the monthly payments on actual consumption basis.* "
GCC 53.1	The currency of the Employer's country is: **Pakistani Rupees (PKR)**.
GCC 54.1	The Contract is subject to price adjustment in accordance with GCC Clause 54, and the following information regarding coefficients shall apply. The coefficients and indexes for adjustment of prices in local currencies shall be as specified in the Table of Adjustment Data submitted together with the Letter of Bid.
GCC 55.1	The proportion of payments retained is: **Five Percent (5%)**.
GCC 56.1	The liquidated damages for the whole of the Works are **0.1%** per day of the Final Contract Price. The maximum amount of liquidated damages for the whole of the Works is **Ten Percent (10%)** of the final Contract Price.
GCC 57.1	The Bonus for the whole of the Works **is Not Applicable.**

GCC 58.1	The Advance Payments shall be **Fifteen Percent (15%)** of the Accepted Contract amount and shall be paid to the Contractor no later than Twenty-Eight (28) days from the date the corresponding bank guarantee delivered by the Contractor and has been verified by the Employer from the issuing bank. The bifurcation of Fifteen Percent (**15%**) advance payment is as follows; 10% After Signing of Contract and remaining 5% could be paid after confirmation of Mobilization of Contractors resources, Machinery, Human Resource at sites by the Project Manager.
GCC 58.3	Repayment of the Advance Payments shall be: **Twenty Percent (20%)** from each payment certificate.
GCC 59.1	The Performance Security amount is **Ten Percent (10%)** of the accepted contract amount. In case of Joint Venture, the performance security must be in the name of Joint Venture. The Performance Security shall be issued either (a) By a reputable bank, which may include scheduled banks, located in the Country, or (b) by a reputable foreign bank, selected by the Contractor and acceptable to the Employer. If the bank issuing the Performance Security furnished by the Contractor is outside the Country, the issuer shall have a correspondent bank in the Country to make it enforceable in the Country. The Performance Security shall be in the form annexed to the Bidding Document.
G. Finishing the Contract	
GCC 69.2	Please add the following as Sub-Clause 69.2: *"Upon the completion of construction, the Contractor shall fully reinstate pathways, other local infrastructure to at least their pre-project condition as recorded by the Contractor in consonance with its obligation in Clause 22."*
GCC 71.1	Add the following at the end of this sub-clause: On expiry of the Defects Liability Period, the Employer / Employer's representative shall constitute a committee comprising of Project Manager / Project Manager's representative, Employer / Employer's representative and the Contractor / Contractor's representative. The committee shall conduct a detailed inspection of the Works to ascertain the completion of any outstanding Work stated in Completion Certificate and remedying of defects to ascertain to the Project Manager for issuance of Defects Liability Certificate or otherwise.
GCC 72.1	The date by which operating and maintenance manuals are required is **Twenty Eight (28) days** after issuance of the Completion Certificate. The date by which **"as built"** drawings are required is within **Twenty Eight (28) days** after issuance of the Completion Certificate.
GCC 72.2	The amount to be withheld for failing to produce **"as built" drawings** by the date required in GCC 72.1 is **PKR Five Hundred Thousand (500,000).**
GCC 73.2 (h)	The maximum number of days is: **One Hundred (100) days**
GCC 75.1	The percentage to apply to the value of the work not completed, representing the Employer's additional cost for completing the Works, is **Fifteen Percent (15%) of the final Contract Price.**

PCC 80	Please add the following as new sub-paragraph 80: *"The Contractor shall provide the Employer with quarterly reports of its activities, including each of its obligations in Sub-Clauses 22, 24, 27,34, 69 and 81*.
PCC 81	Please add the following as new Sub-Clause 81: ***"Protection of the Environment:*** *The Contractor shall comply with all applicable national, provincial, and local environmental laws and regulations.* *The Contractor shall also comply with all reasonable requests of the national and local authorities responsible for enforcing environmental controls. Within 14 days of the Start Date the Contractor shall submit a detailed Site Specific Environmental Management Plan (SSEMP) for the Project Manager's no objection showing how he/she intends to comply with environmental laws and regulations and other specific requirements prescribed in the Contract, addressing all the monitoring and mitigation measures set forth in the Environmental Impact Assessment ("EIA") or Initial Environmental Examination ("IEE") and the Environmental Management Plan ("EMP") of the project attached in Section 6- Employer's Requirements. Work shall not commence on the Site until the no objection of SSEMP has been obtained from the Project Manager and is being implemented. Such acceptance by the Project Manager shall not relive the Contractor of any of his obligations or responsibilities under the Contract.* *The Contractor shall (a) establish an operational system for managing environmental impacts, (b) comply with the approved SSEMP and any corrective or preventative actions set out in safeguards monitoring reports that the Employer will prepare from time to time to monitor the implementation of the project EMP through the SSEMP, (c) allocate the budget required to ensure that such measures, requirements and actions are carried out, (d) submit semi-annual reports on the compliance of such measures to the Employer.* *Where unanticipated environmental risks or impacts become apparent during the Contract, the Contractor is required to update the SSEMP to outline the potential impacts to site works and associated mitigation measures for the Project Manager's approval"*
PCC 82	Please add following as the new Sub-Clause 82: ***"Labor Laws:*** *The Contractor, its Personnel, and subcontractors shall comply with the following at all times during the period of the Contract (together, the Labor Requirements):* *(a) all the relevant Laws in force, in Pakistan, which are applicable to the Contractor and its Personnel, including but not limited to, Laws applying to their employment, health, safety, welfare, immigration and emigration, and shall allow them the exercise of all their legal rights, and Laws concerning the prevention of sexual harassment, abuse, assault and sexual exploitation of, or by, the Contractor's Personnel at or in the vicinity of the Site, or any accommodation, amenities and facilities provided under the Contract;* *(b) (i) the Standard Operating Procedures as may be issued by the Employer (SOPs) to the Contractor with respect to the conditions of the place of employment, health and safety measures to be taken to protect the health, safety and welfare of the Contractor's Personnel; and (ii) the core labor standards which prohibits the use child labor, discrimination of workers in respect of employment and occupation, the*

	use of forced or compulsory labor, and allows the freedom of association and effectively recognizes the right to collective bargaining (CLS); and *(c) the requirements on health and safety set out in Clause 24.* *If the Contractor or any of its Personnel or sub-contractors becomes aware of any breach, or suspected breach, of the Labor Requirements by the Contractor or any of its Personnel or sub-contractors (the Labor Requirements Non-Compliance), it shall immediately report it to the Employer's Representative in writing, giving details of the nature of the breach and the time-frame within which such Labor Requirements Non-Compliance will be rectified. If the Employer becomes aware of any Labor Requirements Non- Compliance, the Employer's Representative (or any other person nominated by the Employer) shall deliver a written notice to the Contractor's Representative (Employer's Notice of Non-Compliance), giving details of the nature of the breach and the time-frame within which such breach must be rectified by the Contractor. The notice shall also require the Contractor to explain in writing its response to the alleged finding of a Labor Requirements Non-Compliance. The Contractor shall be given 7 calendar days to submit its written response to the Employer's Notice of Breach of Labor Requirements. If the Contractor fails to rectify the Labor Requirements Non-Compliance within the prescribed period, and if the Employer determines that the breach is of such materiality and gravity that in the opinion of the Employer (acting reasonably), it merits a stoppage of Works (as specified in the Schedule), the Employer shall be entitled to declare a stoppage of Works for a period of time to be determined by the Employer. The Contractor shall not be entitled to an extension of time for, or payment or reimbursement for any costs incurred in, rectifying the Labor Requirements Non-Compliance. The Contractor shall be solely responsible and liable for all consequences and liabilities arising from such stoppage of Works and the Labor Requirements Non-Compliance. Any action taken by the Employer pursuant to an Employer's Notice of Non-Compliance shall be without prejudice to the Employer's rights under the Contract, including without limitation the Employer's rights to terminate the Contract under GCC 73."*

Section 9 - Contract Forms

This section contains forms which, once completed, will form part of the Contract. The forms for Performance Security and Advance Payment Security, when required, shall only be completed by the successful Bidder after contract award.

Table of Forms

Notification of Award 9-2

Contract Agreement 9-3

Performance Security 9-5

Advance Payment Security 9-6

Indemnity Bond for Secured Advance ……..…….…… 9-7

Notification of Award

---- on letterhead paper of the employer ----

Letter of Acceptance

. . . . . date. . . . . .

To: . . . . . *Name and address of the contractor* . . . . . .

Subject: . . . . . *Notification of Award Contract No.* . . . . . .

This is to notify you that your Bid dated . . . . *date* . . . . for execution of the . . . . . .*name of the contract and identification number, as given in the Bid Data Sheet* . . . . . for the Accepted Contract Amount of the equivalent of . . . . . .*amount in words and figures and name of currency* . . . . . ., as corrected and modified in accordance with the Instructions to Bidders is hereby accepted by our Agency.

You are requested to furnish the Performance Security within 28 days in accordance with the Conditions of Contract, using for that purpose the Performance Security Form included in Section 9 (Contract Forms) of the Bidding Document.

[Choose one of the following statements:]

We accept that *[insert the name of adjudicator proposed by the bidder]* be appointed as the Adjudicator.

[or]

We do not accept that *[insert the name of the adjudicator proposed by the bidder]* be appointed as the Adjudicator, and by sending a copy of this Letter of Acceptance to *[insert name of the appointing authority]*, the Appointing Authority, we are hereby requesting such Authority to appoint the Adjudicator in accordance with GCC 29.1.

Authorized Signature: .....

Name and Title of Signatory: .....

Name of Agency: .....

Attachment: Contract Agreement

Contract Agreement

THIS AGREEMENT made the . . . . . .day of . . . . . ., ..., between . . . . . *name of the employer*. . . . . (hereinafter "the Employer"), of the one part, and . . . . . *name of the contractor*. . . . .(hereinafter "the Contractor"), of the other part:

WHEREAS the Employer desires that the Works known as . . . . . *name of the contract*. . . . .should be executed by the Contractor, and has accepted a Bid by the Contractor for the execution and completion of these Works and the remedying of any defects therein,

The Employer and the Contractor agree as follows:

1. In this Agreement, words and expressions shall have the same meanings as are respectively assigned to them in the Contract documents referred to.

2. The following documents shall be deemed to form and be read and construed as part of this Agreement. This Agreement shall prevail over all other Contract documents.

   (a) the Contract Agreement,

   (b) the Letter of Acceptance,

   (c) the Letters of Technical Bid and Price Bid,

   (d) the Particular Conditions of Contract,

   (e) the List of Eligible Countries that was specified in Section 5 of the bidding document,

   (f) the General Conditions of Contract,

   (g) the Specifications,

   (h) the Drawings,

   (i) the Bill of Quantities, and

   (j) any other documents shall be added here.[1]

3. In consideration of the payments to be made by the Employer to the Contractor as indicated in this Agreement, the Contractor hereby covenants with the Employer to execute the Works and to remedy defects therein in conformity in all respects with the provisions of the Contract.

4. The Employer hereby covenants to pay the Contractor in consideration of the execution and completion of the Works and the remedying of defects therein, the Contract Price or such other sum as may become payable under the provisions of the Contract at the times and in the manner prescribed by the Contract.

IN WITNESS whereof the parties hereto have caused this Agreement to be executed in accordance with the laws of . . . . . *name of the borrowing country*. . . . .on the day, month and year indicated above.

[1] Tables of Adjustment Data may be added if the contract provides for price adjustment (see GCC 54.1).

Signed by .....
for and on behalf of the Employer

in the presence of:

Witness, Name, Signature, Address, Date

Signed by.....
for and on behalf the Contractor

in the presence of:

Witness, Name, Signature, Address, Date

Performance Security

Bank's name, and address of issuing branch or office[1]

Beneficiary: ..... *Name and address of the employer* .....

Date: .....

Performance Guarantee No.: .....

We have been informed that . . . . . *name of the contractor. . . . .* (hereinafter called "the Contractor") has entered into Contract No. . . . . *reference number of the contract. . . . .* dated . . . . . .with you, for the execution of . . . . . *name of contract and brief description of works. . . . .* (hereinafter called "the Contract").

Furthermore, we understand that, according to the conditions of the Contract, a performance guarantee is required.

At the request of the Contractor, we . . . . . *name of the bank. . . . .* hereby irrevocably undertake to pay you any sum or sums not exceeding in total an amount of . . . . . *name of the currency and amount in words* [2]*. . . . . .* (. . . . . *amount in figures. . . . .*) such sum being payable in the types and proportions of currencies in which the Contract Price is payable, upon receipt by us of your first demand in writing accompanied by a written statement stating that the Contractor is in breach of its obligation(s) under the Contract, without your needing to prove or to show grounds for your demand or the sum specified therein.

This guarantee shall expire, no later than the . . . . . Day of . . . . . , ... [3], and any demand for payment under it must be received by us at this office on or before that date.

This guarantee is subject to the Uniform Rules for Demand Guarantees, ICC Publication No. 458, except that subparagraph (ii) of Sub-article 20(a) is hereby excluded. [4]

. . . . . .

Signature(s) and seal of bank (where appropriate)

If the institution issuing the performance security is located outside the country of the employer, it shall have a correspondent financial institution located in the country of the employer to make it enforceable.

---

1 All italicized text is for guidance on how to prepare this demand guarantee and shall be deleted from the final document.

2 The guarantor shall insert an amount representing the percentage of the contract price specified in the contract and denominated either in the currency(ies) of the contract or a freely convertible currency acceptable to the employer. If the bank issuing the performance security is located outside the country of the employer, it shall have a correspondent financial institution located in the country of the employer.

3 Insert the date 28 days after the expected completion date. The employer should note that in the event of an extension of the time for completion of the contract, the employer would need to request an extension of this guarantee from the guarantor. Such request must be in writing and must be made prior to the expiration date established in the guarantee. In preparing this guarantee, the employer might consider adding the following text to the form, at the end of the penultimate paragraph: "The Guarantor agrees to a one-time extension of this guarantee for a period not to exceed [6 months][1 year], in response to the Employer's written request for such extension, such request to be presented to the Guarantor before the expiry of the guarantee."

4 Or the same or similar to this clause specified in the Uniform Rules for Demand Guarantees, ICC Publication No. 758 where applicable.

Advance Payment Security

Bank's name, and address of issuing branch or office[1]

Beneficiary: .....*Name and address of the employer* .....
Date: .....
Advance Payment Guarantee No.: .....

We have been informed that . . . . . *name of the contractor*. . . . . (hereinafter called "the Contractor") has entered into Contract No. . . . . *reference number of the contract*. . . . . dated . . . . . .with you, for the execution of . . . . . *name of contract and brief description of works*. . . . . (hereinafter called "the Contract").

Furthermore, we understand that, according to the Conditions of the Contract, an advance payment in the sum . . . . . *name of the currency and amount in words* [2]. . . . . (. . . . . *amount in figures*. . . . .) is to be made against an advance payment guarantee.

At the request of the Contractor, we . . . . . *name of the bank*. . . . . hereby irrevocably undertake to pay you any sum or sums not exceeding in total an amount of . . . . . *name of the currency and amount in words*[3]. . . . . (. . . . . *amount in figures*. . . . .) upon receipt by us of your first demand in writing accompanied by a written statement stating that the Contractor is in breach of its obligation under the Contract because the Contractor used the advance payment for purposes other than the costs of mobilization in respect of the Works.

It is a condition for any claim and payment under this guarantee to be made that the advance payment referred to above must have been received by the Contractor on its account number . . . . . *contractor's account number*. . . . . at . . . . . *name and address of the bank*. . . . . .

The maximum amount of this guarantee shall be progressively reduced by the amount of the advance payment repaid by the Contractor as indicated in copies of interim statements or payment certificates which shall be presented to us. This guarantee shall expire, at the latest, upon our receipt of a copy of the interim payment certificate indicating that eighty percent (80%) of the Contract Price has been certified for payment, or on the . . . day of . . . . . , ... [4], whichever is earlier. Consequently, any demand for payment under this guarantee must be received by us at this office on or before that date.

This guarantee is subject to the Uniform Rules for Demand Guarantees, ICC Publication No. 458 (*or ICC Publication No. 758 as applicable*).

. . . . . .
Signature(s) and seal of bank (where appropriate)

-- Note to Bidder --

If the institution issuing the advance payment security is located outside the country of the employer, it shall have a correspondent financial institution located in the country of the employer to make it enforceable.

---

1 All italicized text is for guidance on how to prepare this demand guarantee and shall be deleted from the final document.

2 The guarantor shall insert an amount representing the amount of the advance payment denominated either in the currency(ies) of the advance payment as specified in the Contract, or in a freely convertible currency acceptable to the employer.

3 Footnote 2.

4 Insert the expected expiration date of the time for completion. The employer should note that in the event of an extension of the time for completion of the contract, the employer would need to request an extension of this guarantee from the guarantor. Such request must be in writing and must be made prior to the expiration date established in the guarantee. In preparing this guarantee, the employer might consider adding the following text to the form, at the end of the penultimate paragraph: "The Guarantor agrees to a one-time extension of this guarantee for a period not to exceed [6 months][1 year], in response to the Employer's written request for such extension, such request to be presented to the Guarantor before the expiry of the guarantee."

INDEMNITY BOND FOR SECURED ADVANCE AGAINST MATERIALS BROUGHT AT SITE

(ON PAK RUPESS 500 JUDICIAL STAMP PAPER)

This Deed of Indemnity is issued by M/s. _____ _____ (Name of the Contractor) in favor of Local Government & Community Development Department, Government of Punjab (hereinafter referred to as the Employer).

Whereas the Employer has paid the Secured Advance against the cost of Materials through any Bank or like agency by any other method by virtue of the terms of the Contract existing between the Parties. The details of the Materials and their price for which Secured Advance is sought for the period _____till consumption of the Materials is as under:

1. _____ at Rs._____ per _____ = Rs.

2. _____ at Rs._____ per _____ = Rs.

THEREFORE, THIS DEED OF INDEMNITY WITHNESSETH AS FOLLOWS:

I/We _____ of M/s _____ do hereby indemnify the Employer for all losses due to thefts, arson, pilferage, loss due to flood and inundation, shortage, deterioration and depreciation etc. through any act of Man or God or slump in the Market of any or all the Materials financed or paid by the Employer on our request for financing payment against Materials.

I/We_____ shall indemnify the Employer against any or all claims and damages arising out of or resulting to the said Materials.

I/We _____ further declare that we will faithfully abide by the above declaration and solemnly affirm that we will not remove, sell, pilferage any of the Materials against which the Employer has paid us such a Secured Advance and will not pledge the same with any Bank, Finance Corporation, Firm, Company, Individual or the like agency or create any change whereon in any from what so ever, except incorporating in the Permanent Works under the Contract.

I/We_____ do hereby also declare that in the event of my/our infringement of the declaration made above the Employer will be entitled to forfeit all such Materials and also proceed against me/us according to the relevant clause pertaining to breach of Contract and further invoke the power or seek any remedies secured of any kind under the Contract signed with us or otherwise available under the Law.

Place_____ Dated _____

Contractor _____ (Signature)
Name and CNIC/Passport (copy attached) number